Owner Manual

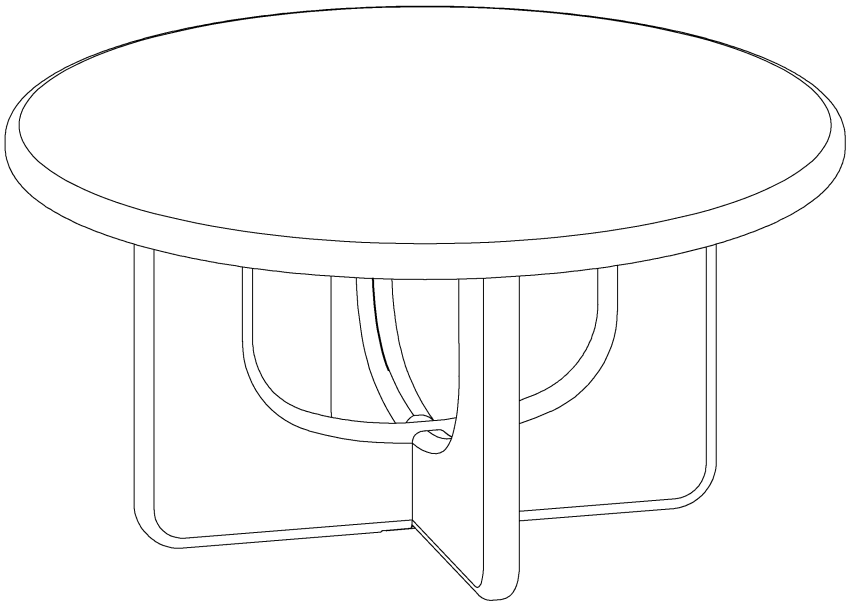

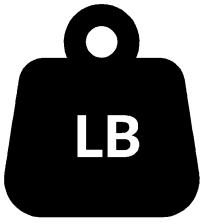

Per Seat Weight Limitation

100 LBS

Thank You For Choosing Our Furniture

If you have any questions or concerns, don't hesitate to reach out to us.

NOTE:
This brochure contains IMPORTANT safety info. Please read and keep it for future reference.

MAINTENANCE AND WARNINGS

Before You Start

Please follow the steps below:

⚠ Un box the package and check if all parts and accessories are complete.

⚠ Place the parts of the chair on a flat surface.

⚠ Ensure the chair is placed on a stable, flat surface to prevent it from tilting.

⚠ Avoid placing sharp or heavy objects directly on the chair to prevent tears or deformation.

⚠ Clean the installation area in advance and ensure the ground is level and there is enough space to avoid damaging the furniture or making installation difficult.

⚠ Lay a protective mat on the ground to prevent scratching the floor during installation.

After-Sales Service

- If you encounter any issues or need technical support during use, please contact our after-sales team.We offer long-term maintenance and warranty services.

Precautions

⚠ This chair is for indoor use only.Do not expose it to outdoor elements or high-humidity environments.

⚠ Keep the product away from high heat or open flames to prevent fire nazards.

⚠ Do not allow children or pets to play on the chair unsupervised to avoid accidents.

Safety Warnings

⚠ If you notice any loose or damaged parts, stop using the sofa immediately and contact customer service.

⚠ Do not attempt to disassemble or replace any components yourself, as this may affect the stability and safety of the product.

Daily Maintenance

- Regularly clean the surface of the sofa with a chair cloth to prevent dust accumuation.
- For fabric chairs, it is recommended to vacuum weekly and clean the fabric as needed.
- For leather chairs, use a leather cleaner regularly to clean and maintain the material.Avoid direct sunlight to prevent leather aging.
- In case of spills, immediately blot the area with a clean, dry cloth

Parts List

A 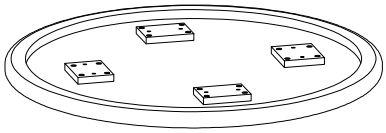 x1 Top	B 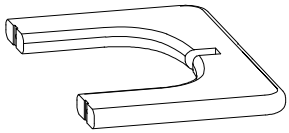 x1 Leg1
C 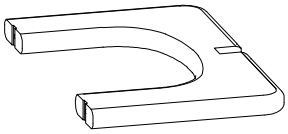 x1 Leg2	

Installation:
10minutes.

Two Person

Hardware List

1 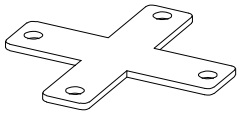 x1 4"x4"x1/8"	2 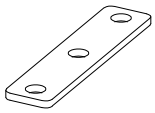 x4 4"x3/4"x1/8"	3 x16+1 D1/4"xL5/8"
4 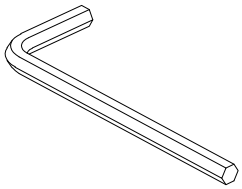 x1		

Step 1

Attach the Leg1 (B) into the Leg2 (C), then secure by Metal bracket(1) and Bolts(3) using Allen key (4).

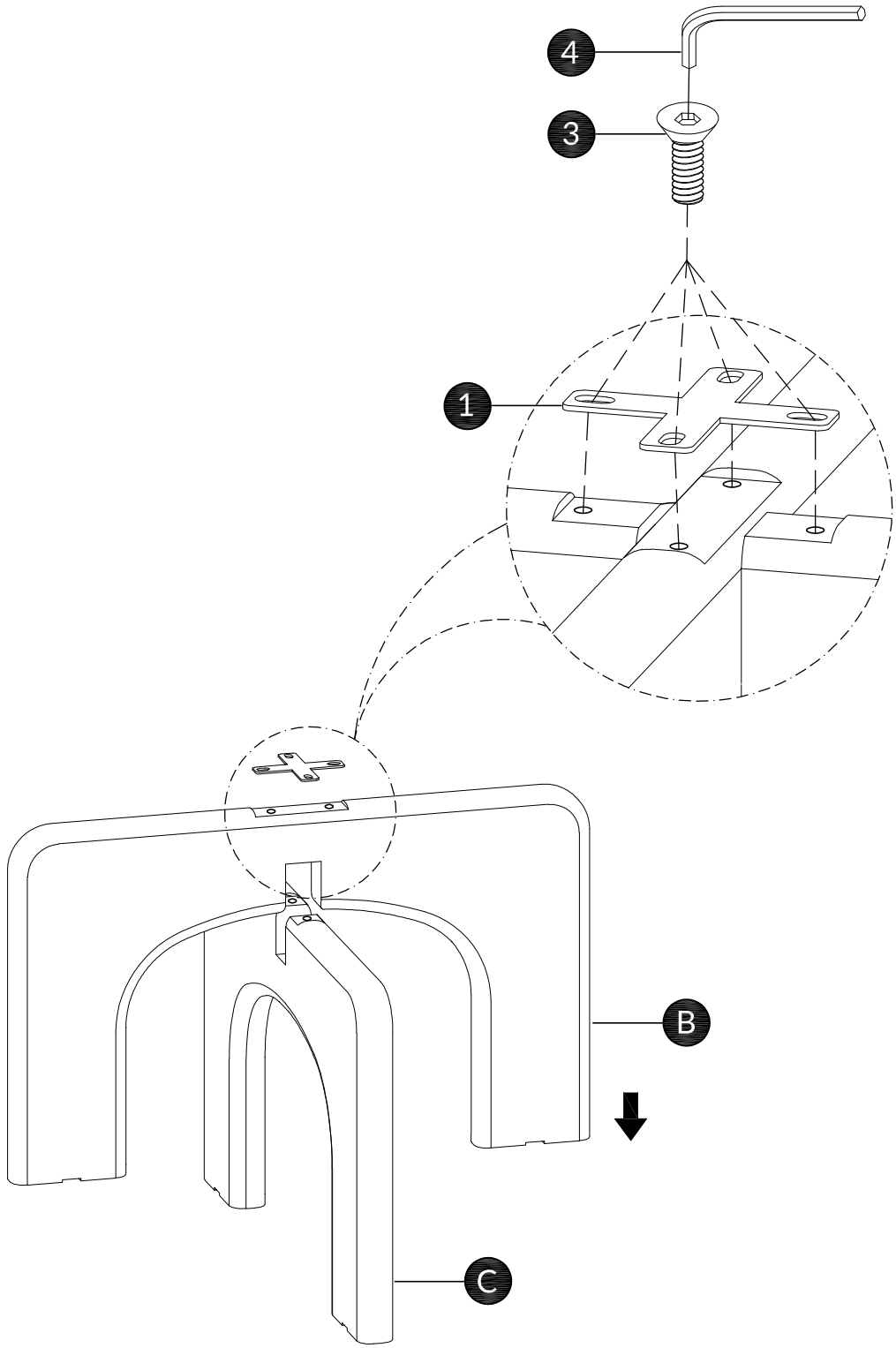

Step 2

Attach the Metal bracket(2) into the Leg, then secure by Bolts(3) using Allen key (4).

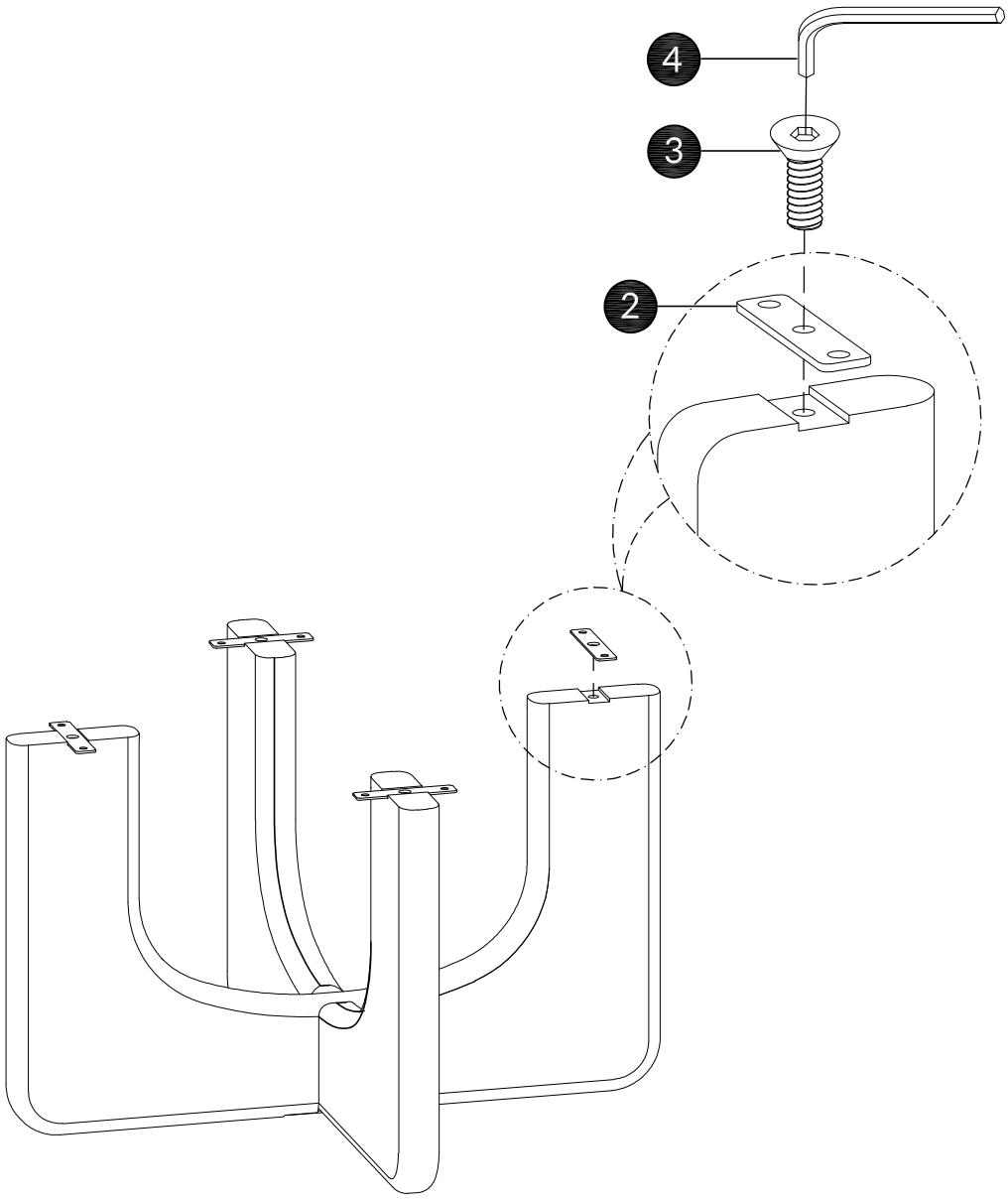

Step 3

Attach the Leg to the Top (A), then secure by Bolts(3) using Allen key (4).

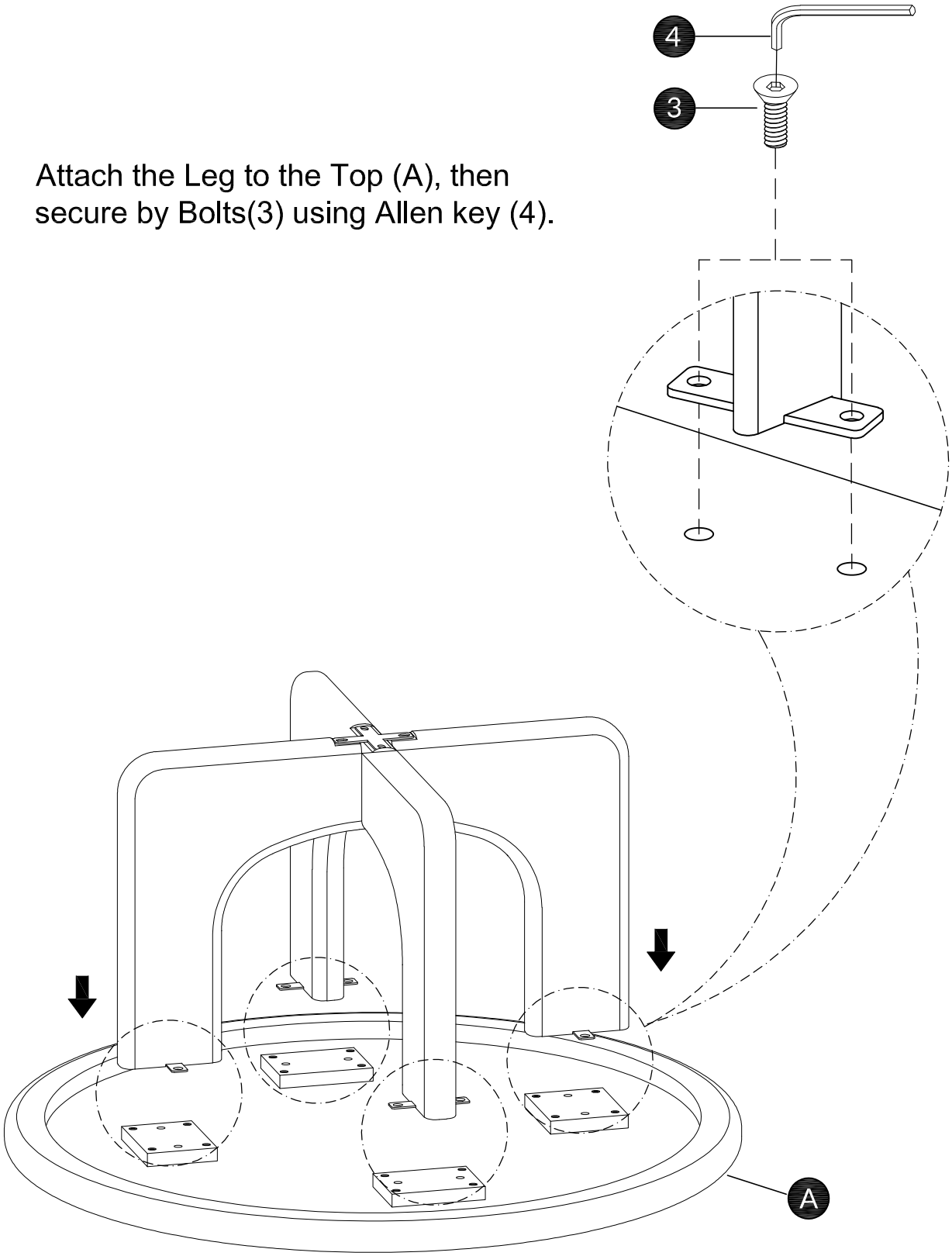

Step 4

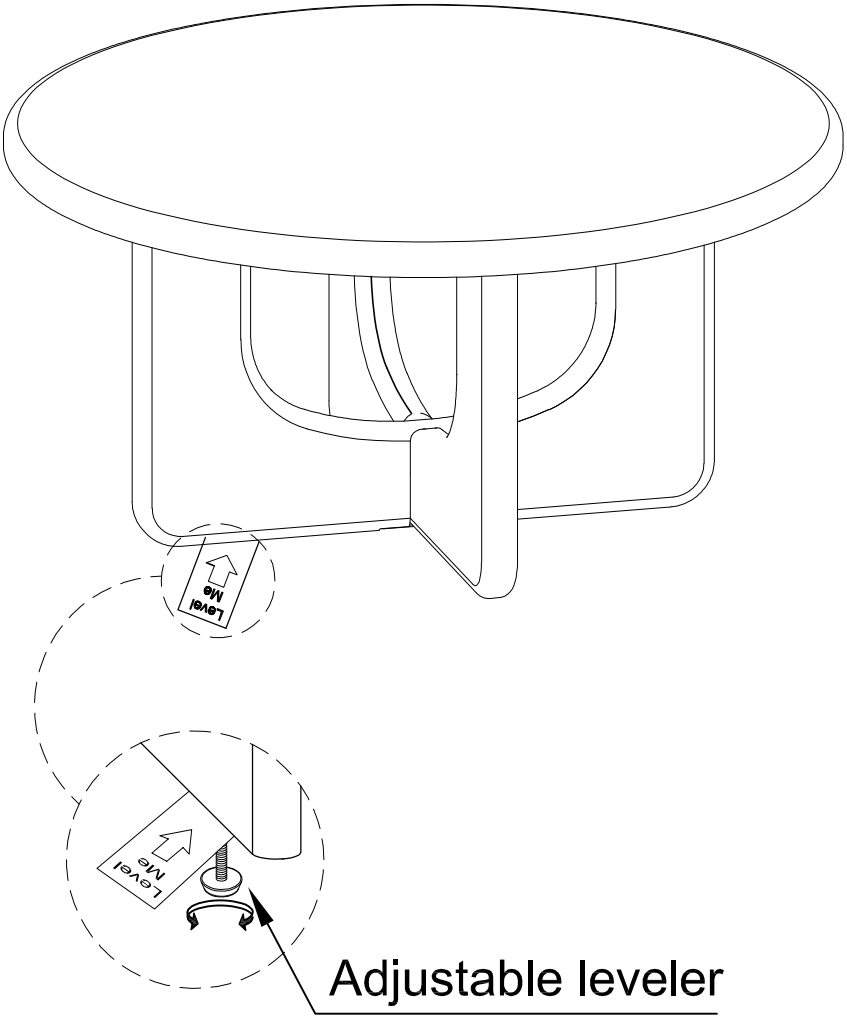

WARRANTY

- We strive to offer quality products, and we also try our best to satisfy every customer who orders from us with products or services as needed.

- We provide 30 days warranty starting from the time you receive the item. Each customer must provide a record of their orders such as the order number, or item receipt for any items that are out of the warranty period you may also still receive.

- Replacement parts by purchasing them from our company if they are available.

- For return,please check the return policy with the retailer or market place you bought from