Corner Glass Cabinet With Frame

Item: MD-008

Assembly Instruction

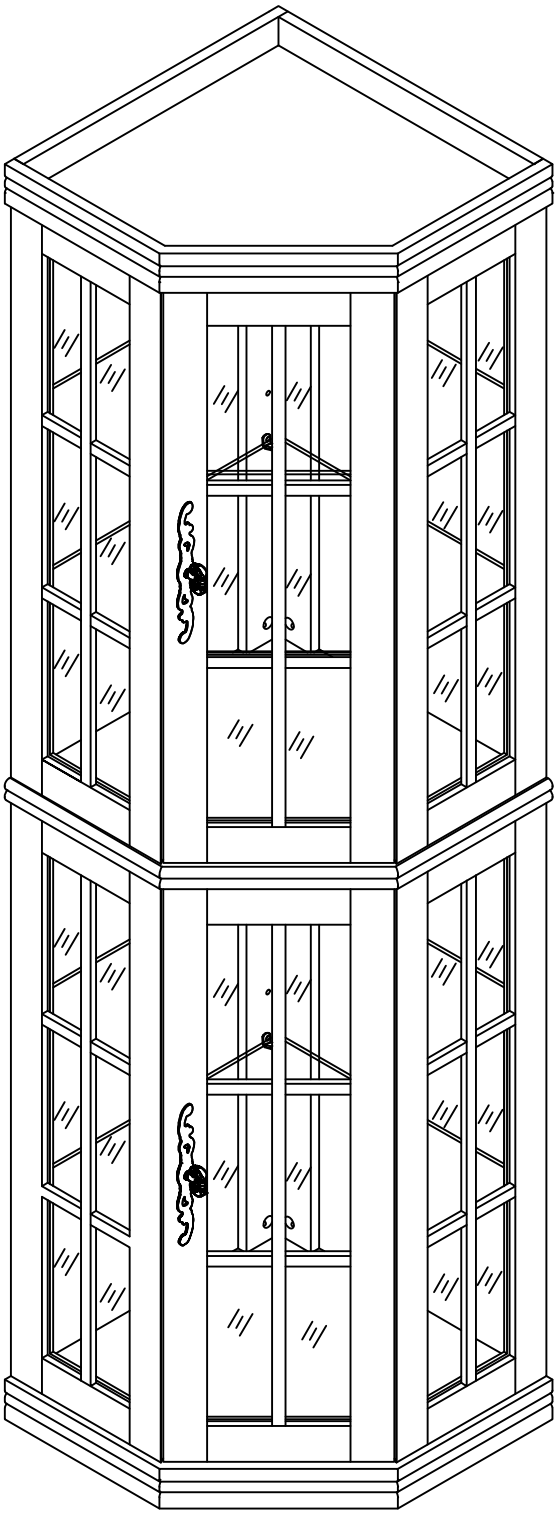

List of Parts

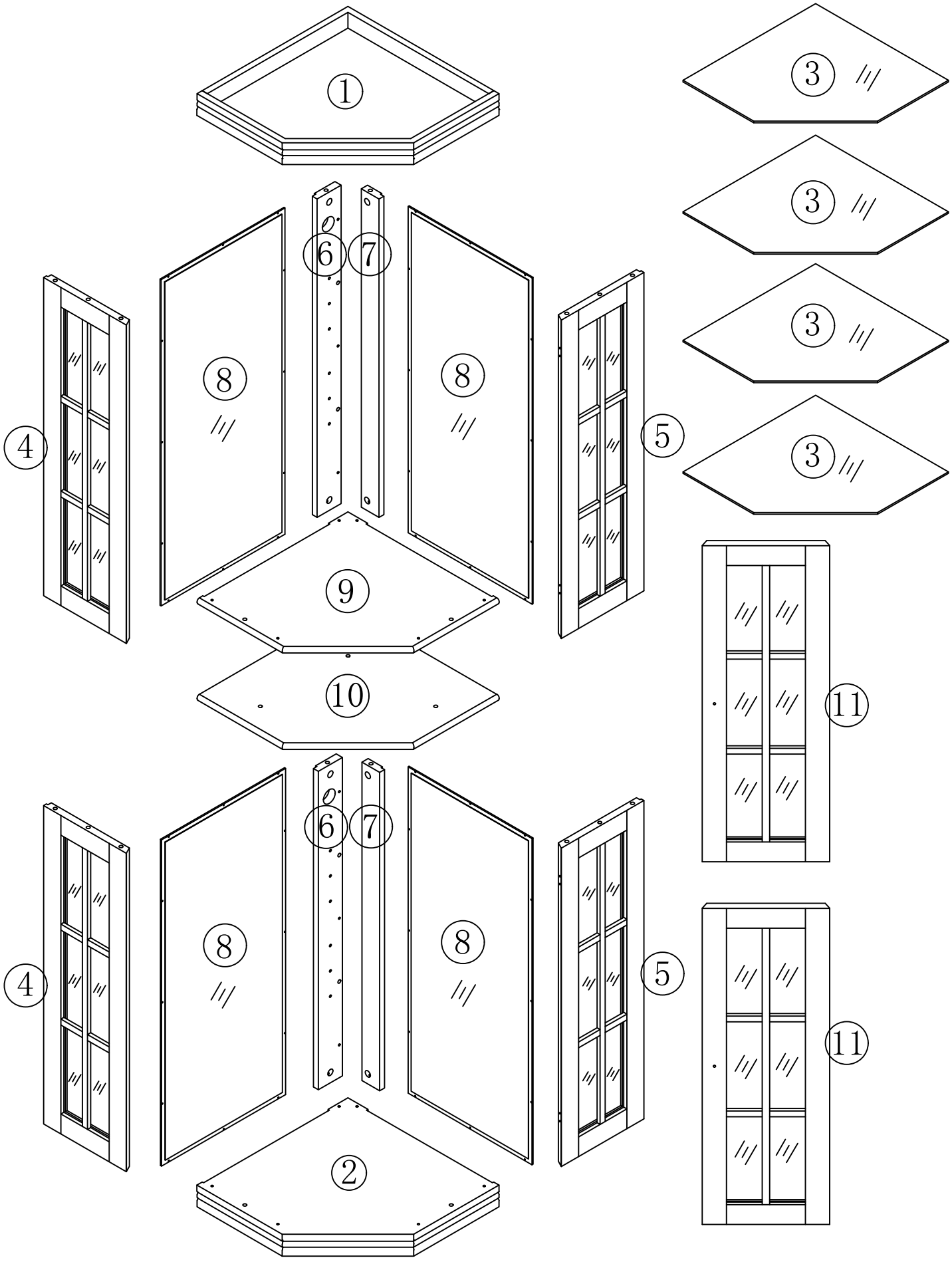

Hardware

A x 24+2	B x 24+2	C x 2	D x 48+2	E x 16+2
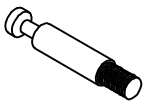 Ø6 x 32mm	 Ø15 x 10mm	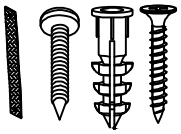	 Ø3*12mm	 Ø3*12mm

F x 4	G x 2	H x 24+2	I x 1	J x 6+1
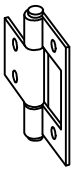	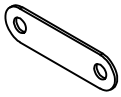	 Ø20mm		 Ø3.5*35mm

K x 20+2	L x 10+2	M x 2	N x 3	O x 3+1
	 Ø3*15mm	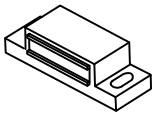	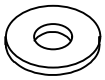	 Ø6*25mm

P x 12+2	Q x 2	R x 2
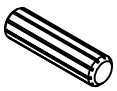 Ø8 x 30mm	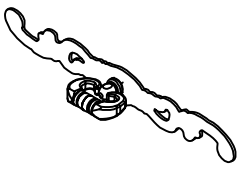	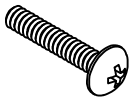 Ø4*25mm

STEP1

J x 6
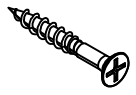
Ø3.5*35mm
P x 4
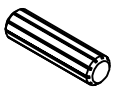
Ø8 x 30mm

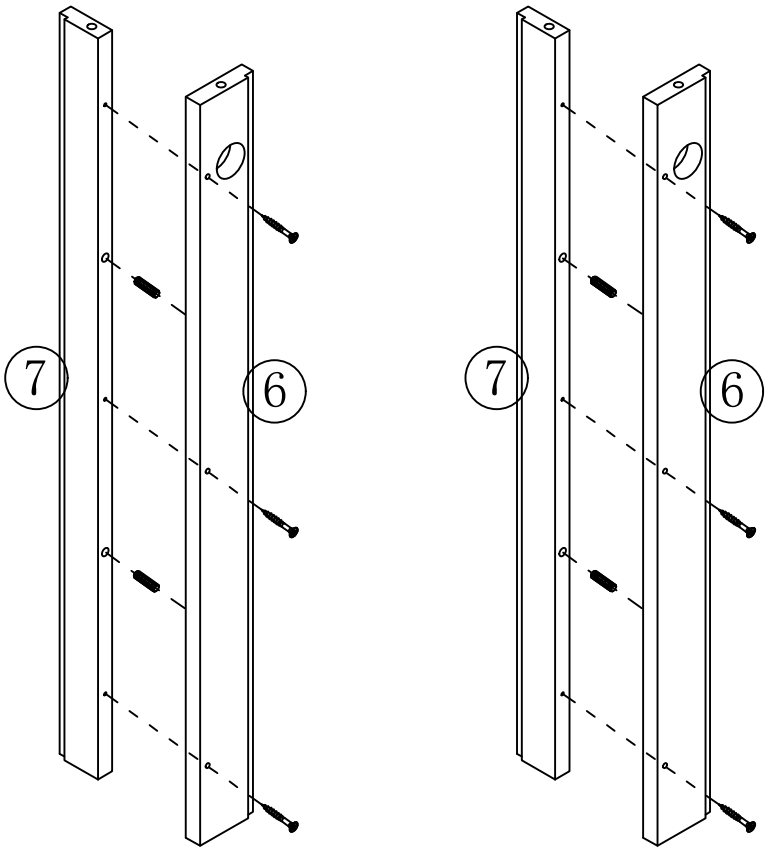

STEP2

A x 12
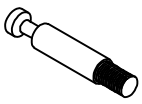
Ø6 x 32mm
L x 2

Ø3*15mm
M x 1
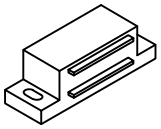

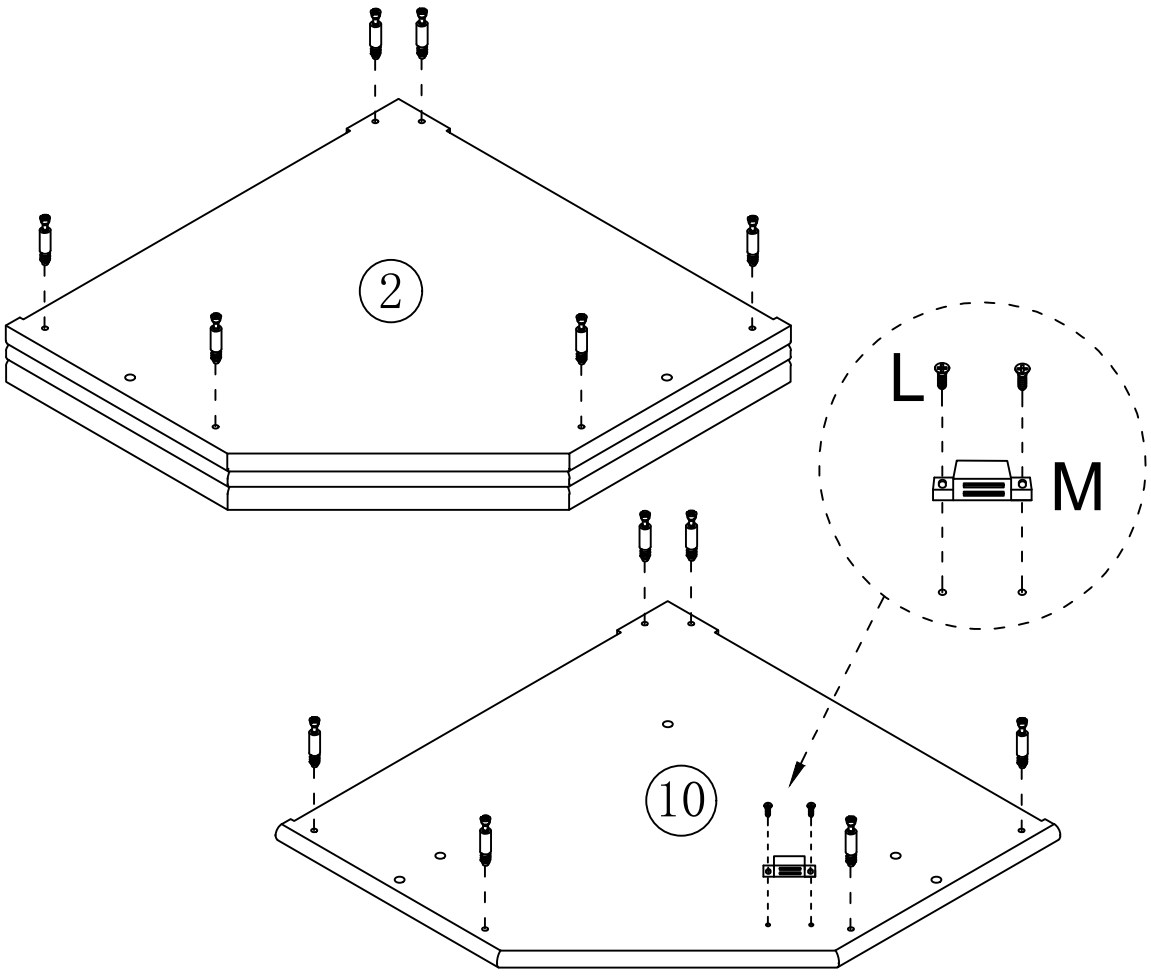

STEP3

B x 12

Ø15 x 10mm
P x 4
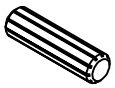
Ø8 x 30mm

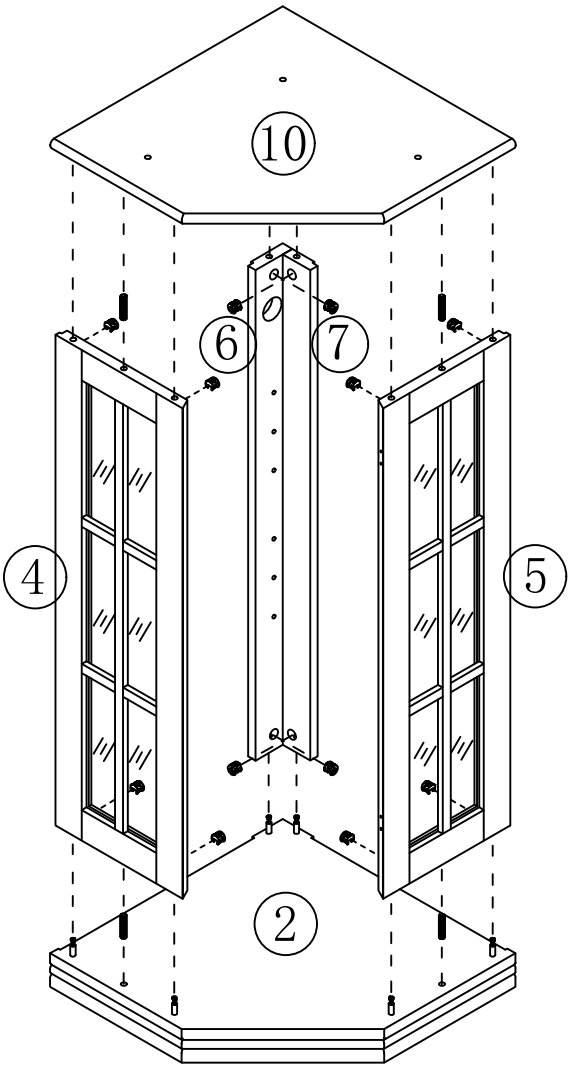

STEP4

A x 6
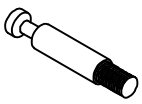
Ø6 x 32mm

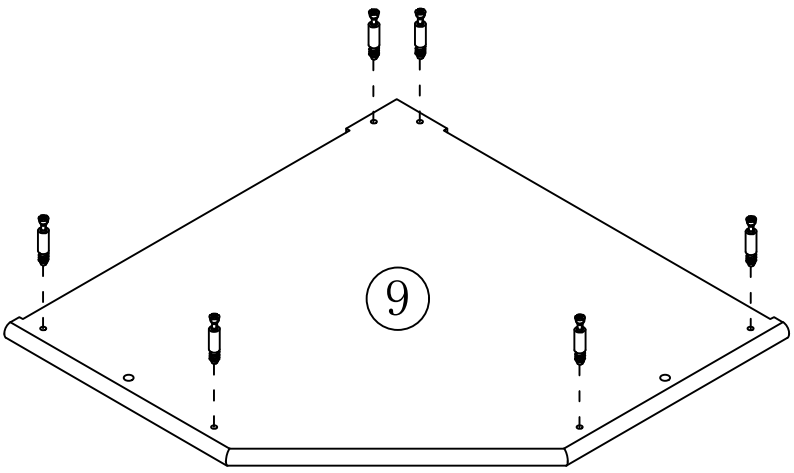

STEP5

A x 6
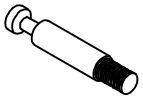
Ø6 x 32mm
L x 4

Ø3*15mm
I x 1

M x 1
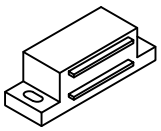

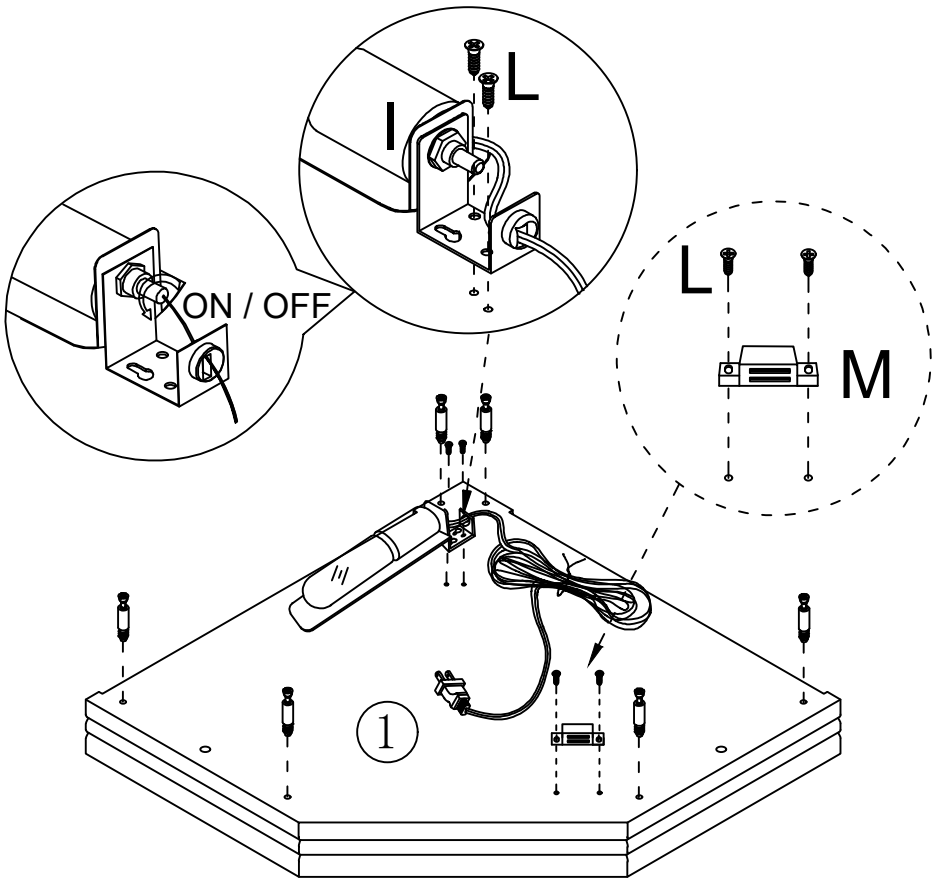

STEP6

B x 12

Ø15 x 10mm
P x 4
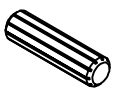
Ø8 x 30mm

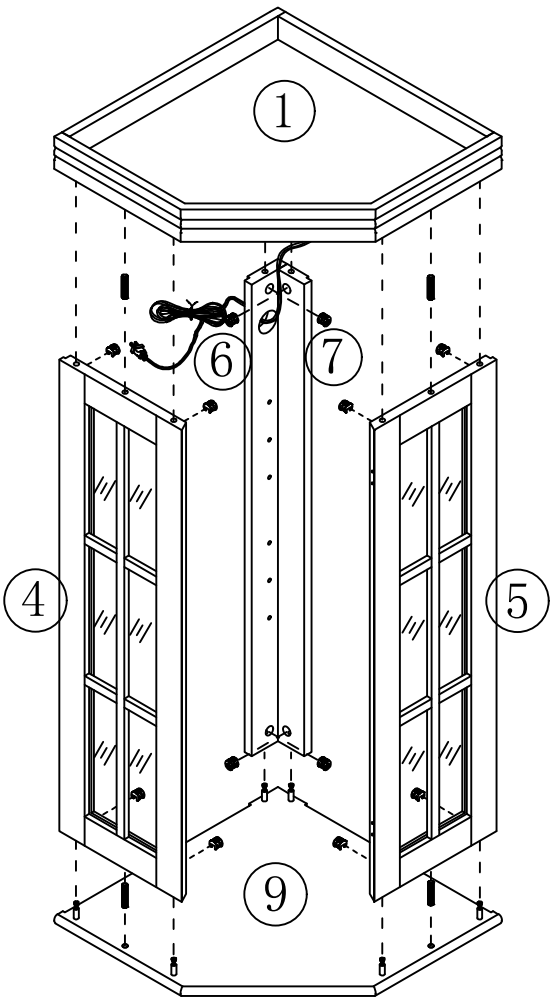

STEP7

D x 24



Ø3*12mm

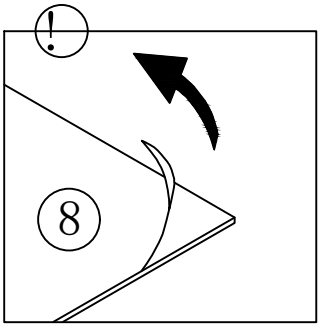

Remove protective film on the mirror panel.

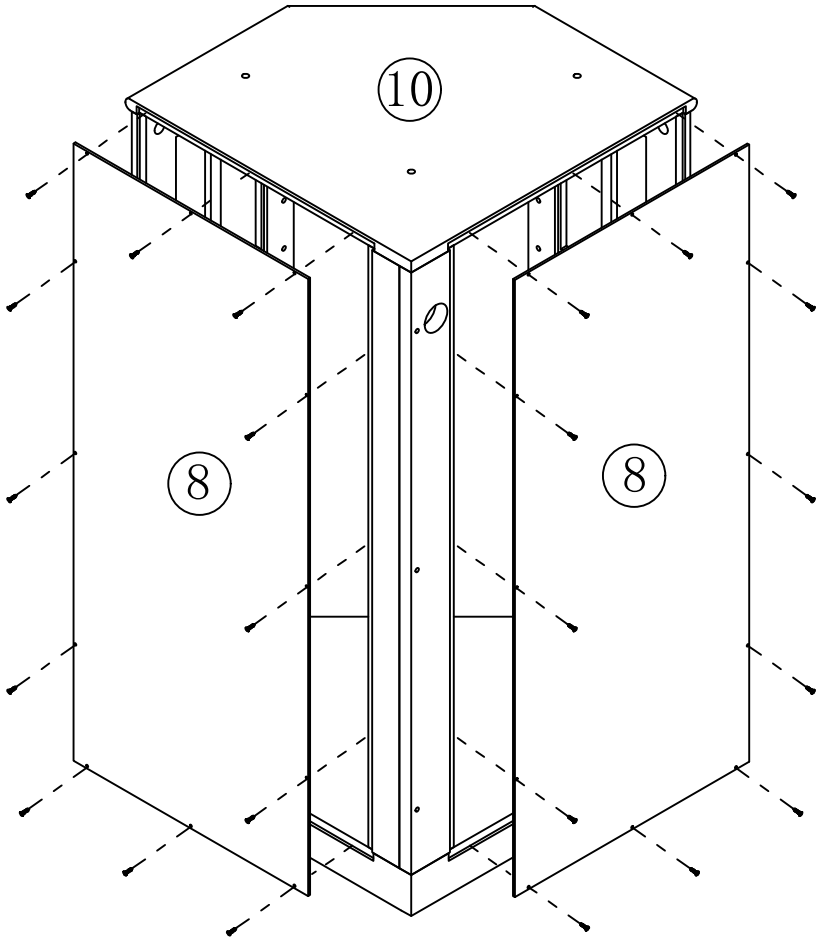

STEP8

D x 22



Ø3*12mm

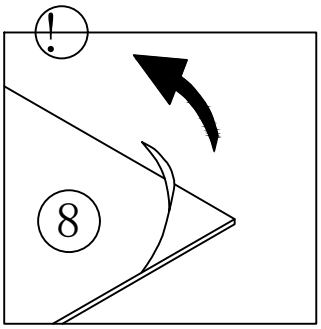

Remove protective film on the mirror panel.

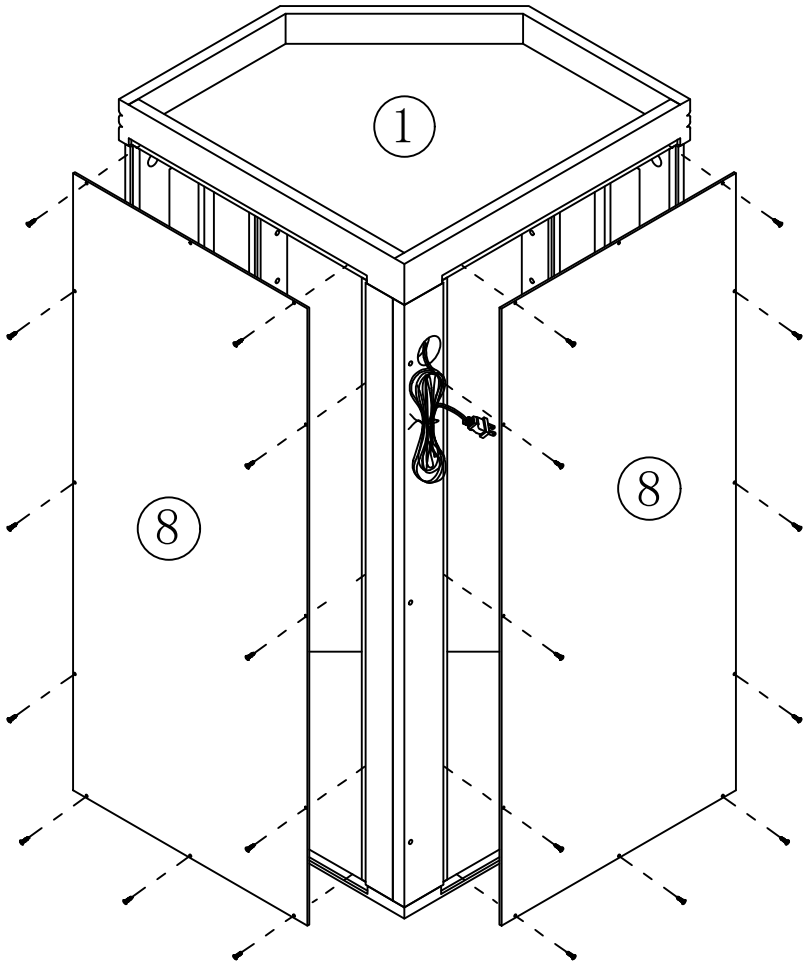

STEP 9

N x 3
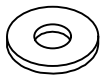
O x 3

Ø6*25mm

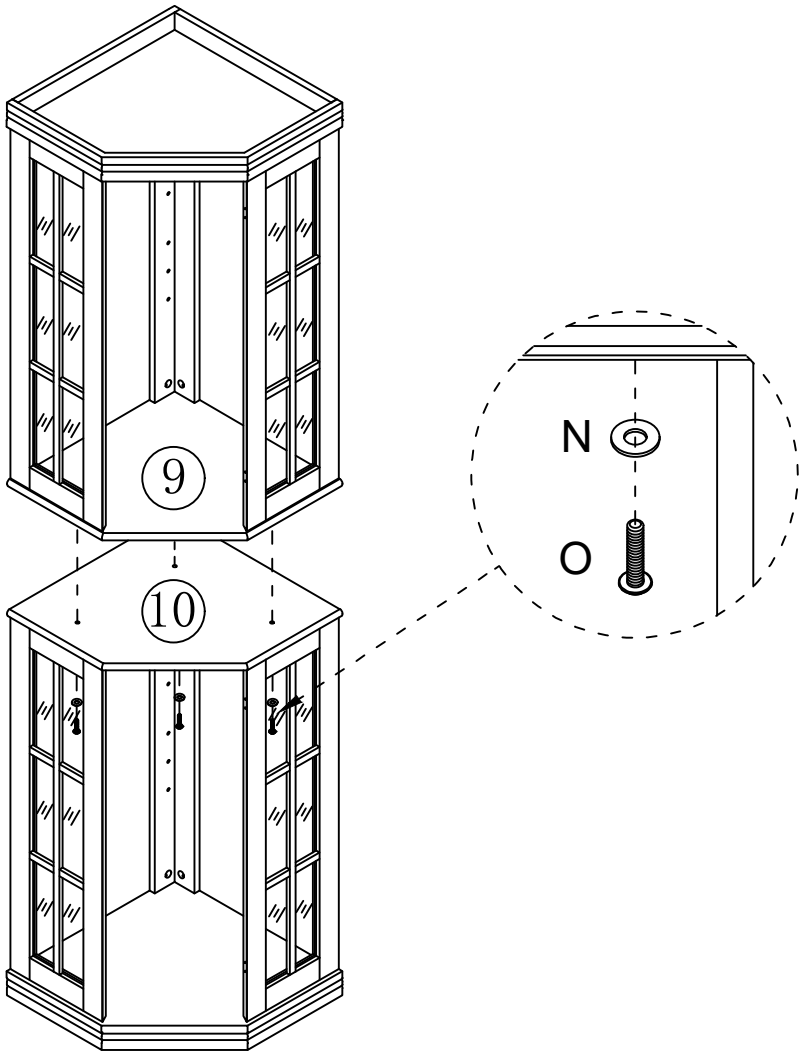

STEP10

H x 24

Ø20mm

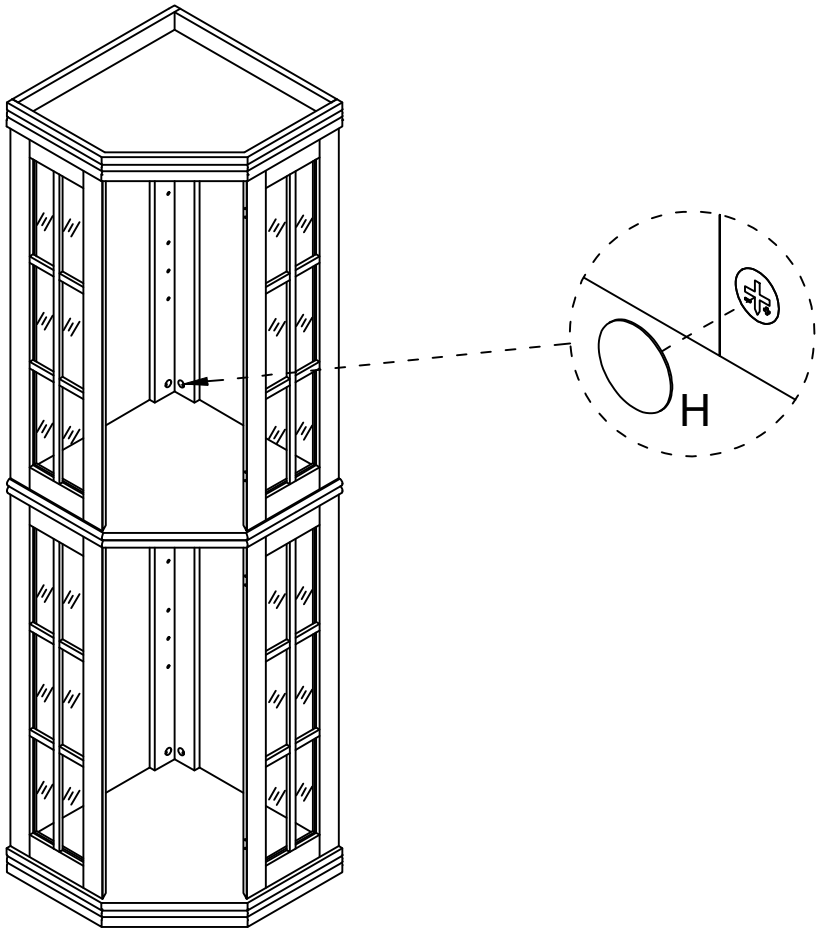

STEP11

Q x 2
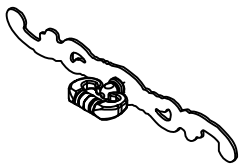
R x 2
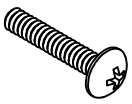
Ø4*25mm
L x 4

Ø3*15mm
G x 2
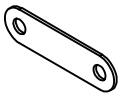

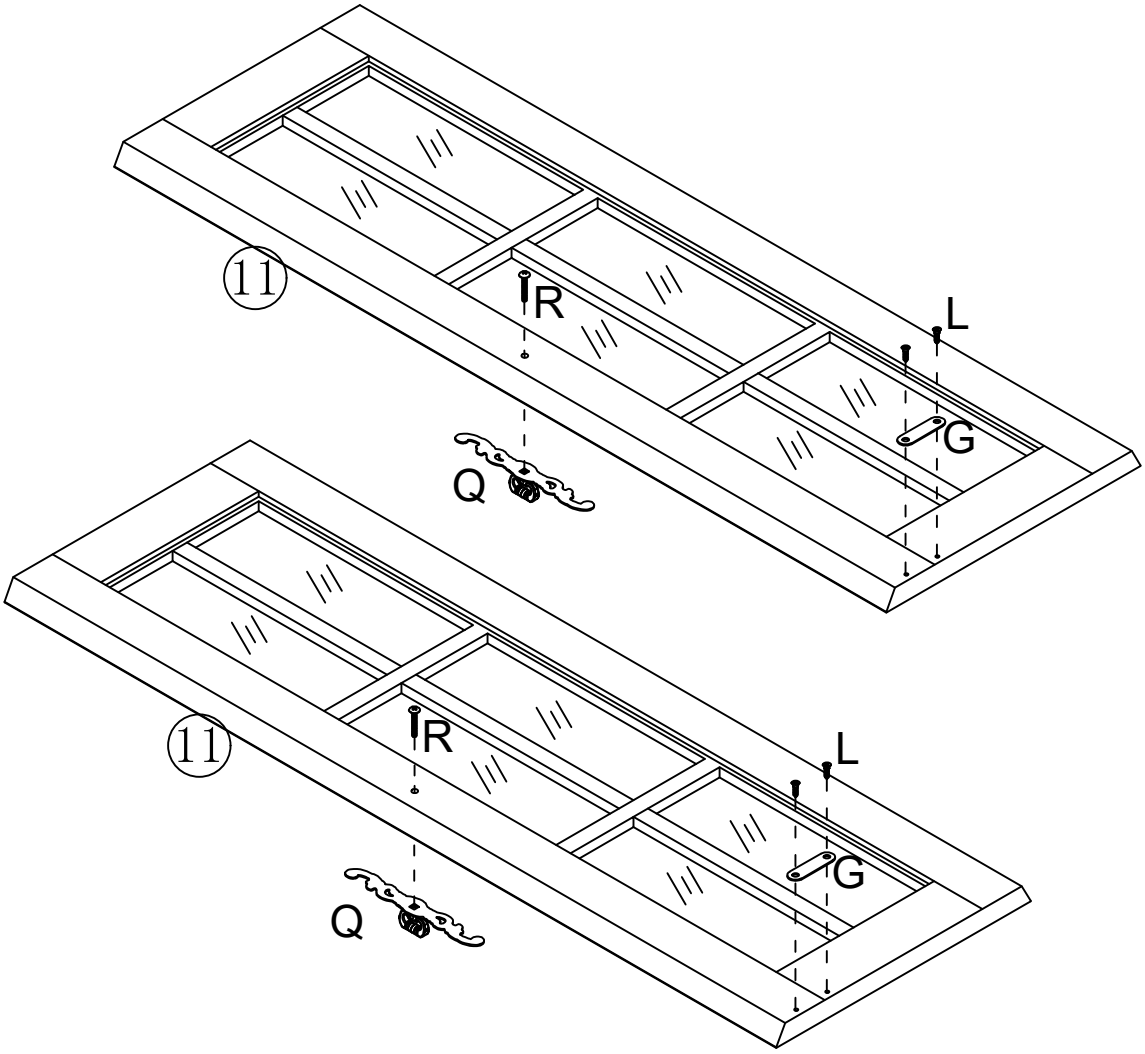

STEP12

F x 4
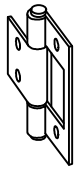
E x 8

Ø3*12mm

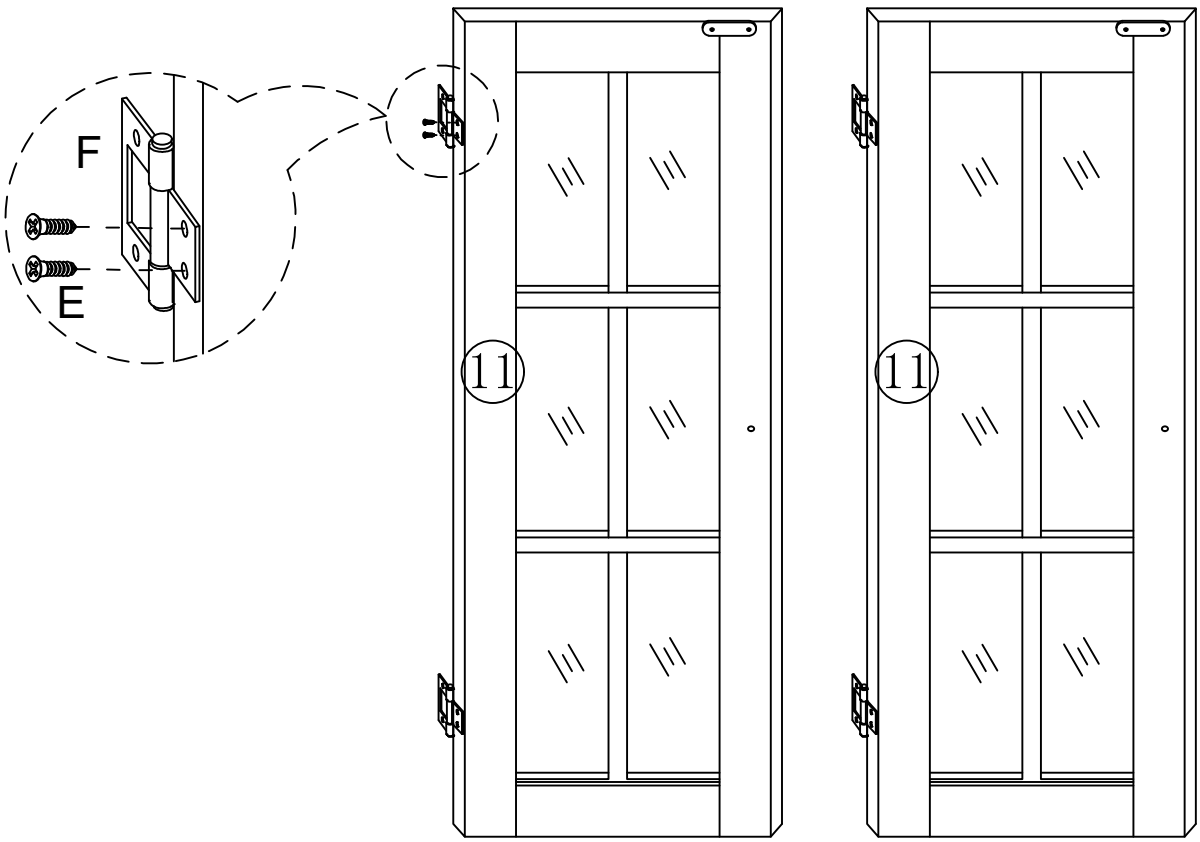

STEP13

E x 8

Ø3*12mm

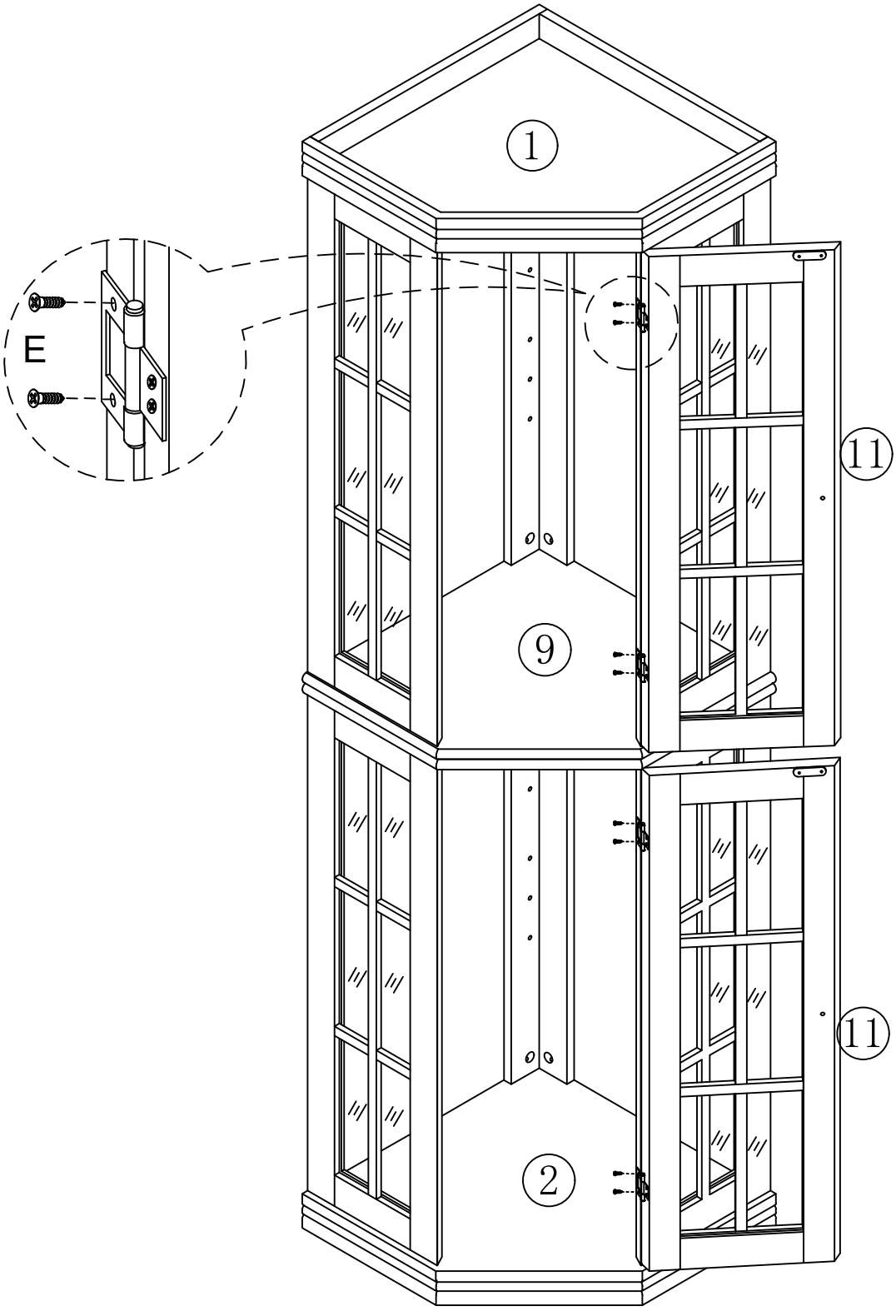

STEP14

K x 20


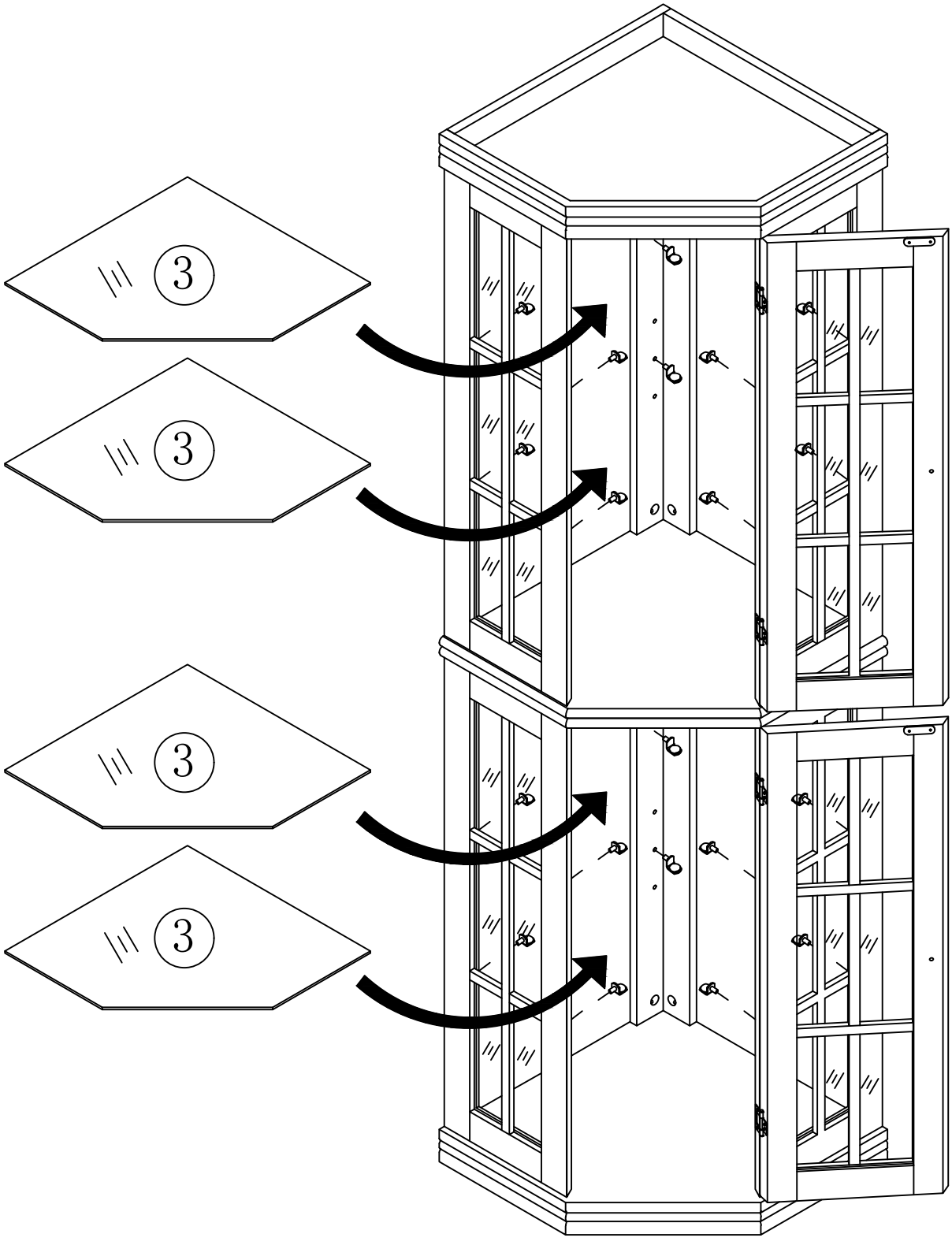

STEP15

C x 2

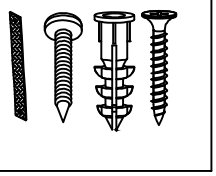

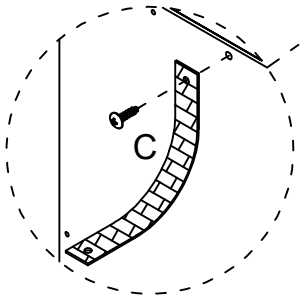

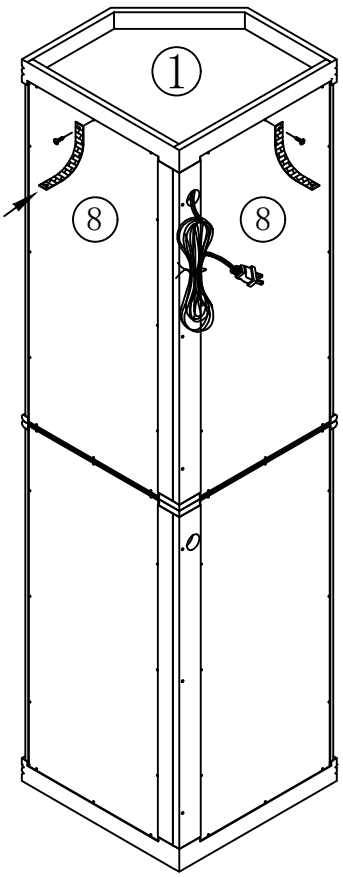

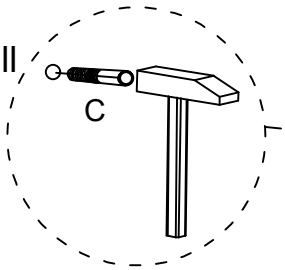

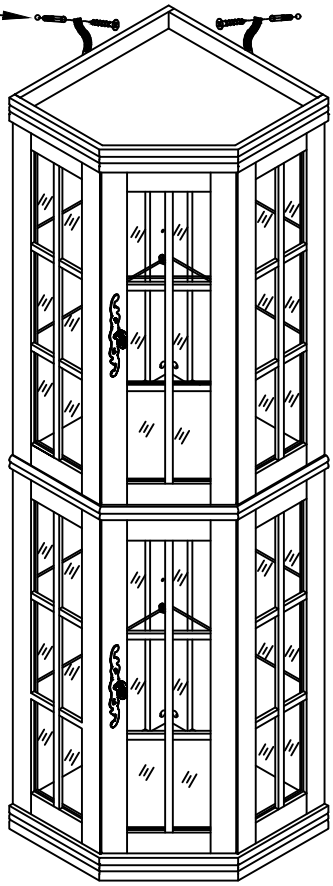

STEP16

