Assembly Instructions

Caution : You must read this before you proceed

Care & Maintenance

- ● Not for commercial use. For residential use only.
- ● Furniture may scratch floors. We recommend using furniture pads to protect your floors.
- ● Do not put hot items directly on furniture surface.
- ● Do not clean furniture with harsh cleansers or polish.
- ● Do not place furniture under direct sunlight.
- ● Do not place furniture near heating or cooling vents.
- ● Do not write on furniture without a padded barrier to protect the surface.
- ● Do not place furniture outside . For indoor use only.
- ● Stains may be removed with mild soap solution and damp cloth.
- ● Children should not climb or jump on the furniture.
- ● Dust and pick-up spills using a clean, non-colored, lint-free cloth.

BED

N761P330028 / N761P330029

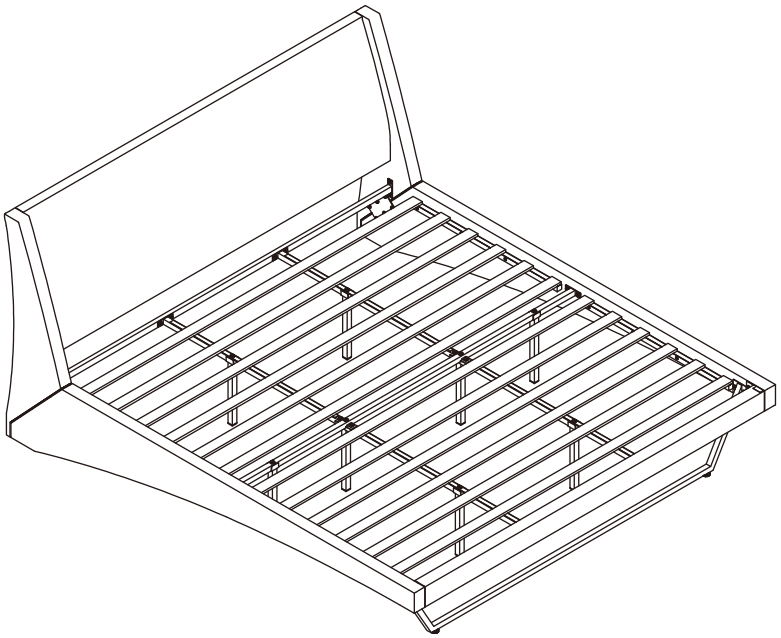

NOTE : This Bed is NOT a TOY.
Keep your child / children at bay during the assembly process.
The Daybed is HEAVY.
To prevent injury to yourself or damage to the product a minimum of two adults are required whenever moving or lifting the product.

Parts List

Label	Picture	Description	QTY
1		Headboard	1
2		Left Headboard Panel	1
3		Right Headboard Panel	1
4		Headboard Stretcher	1
5		Bracket	2
6		Left Bedside Panel	1
7		Right Bedside Panel	1
8		Slat Rail	4
9		Foorboard	1
10		Footboard Leg	1
11		Footboard Feet	2
12		Bracket	2
13		Center Slat	1
14		Center Rail	4
15		Center Support Leg	2
16		Center Slat Support Leg	2
17		Center Rail Support Leg	4
18		Slat	2

Hardware

Label	Picture	Desctiption	QTY
A		Bolt 5/16"x19 mm	40
B		Bolt 5/16"x35 mm	14
C		Bolt 5/16"x45 mm	2
D		Bolt 1/4"x35 mm	16
E		Allen key 4x100 mm	1

Assembly Preparation

Box1	Box2		
1	2	8	14
	3	9	15
	4	10	16
	5	11	17
	6	12	18
	7	13	

- Read instructions, cover to cover-
- Have 2 adults on hand for assembly-
- Do not assemble on flooring or carpet-
- Assemble on a clean non-marring surface (packing foam)-
- Save all packaging until finished-

Overview

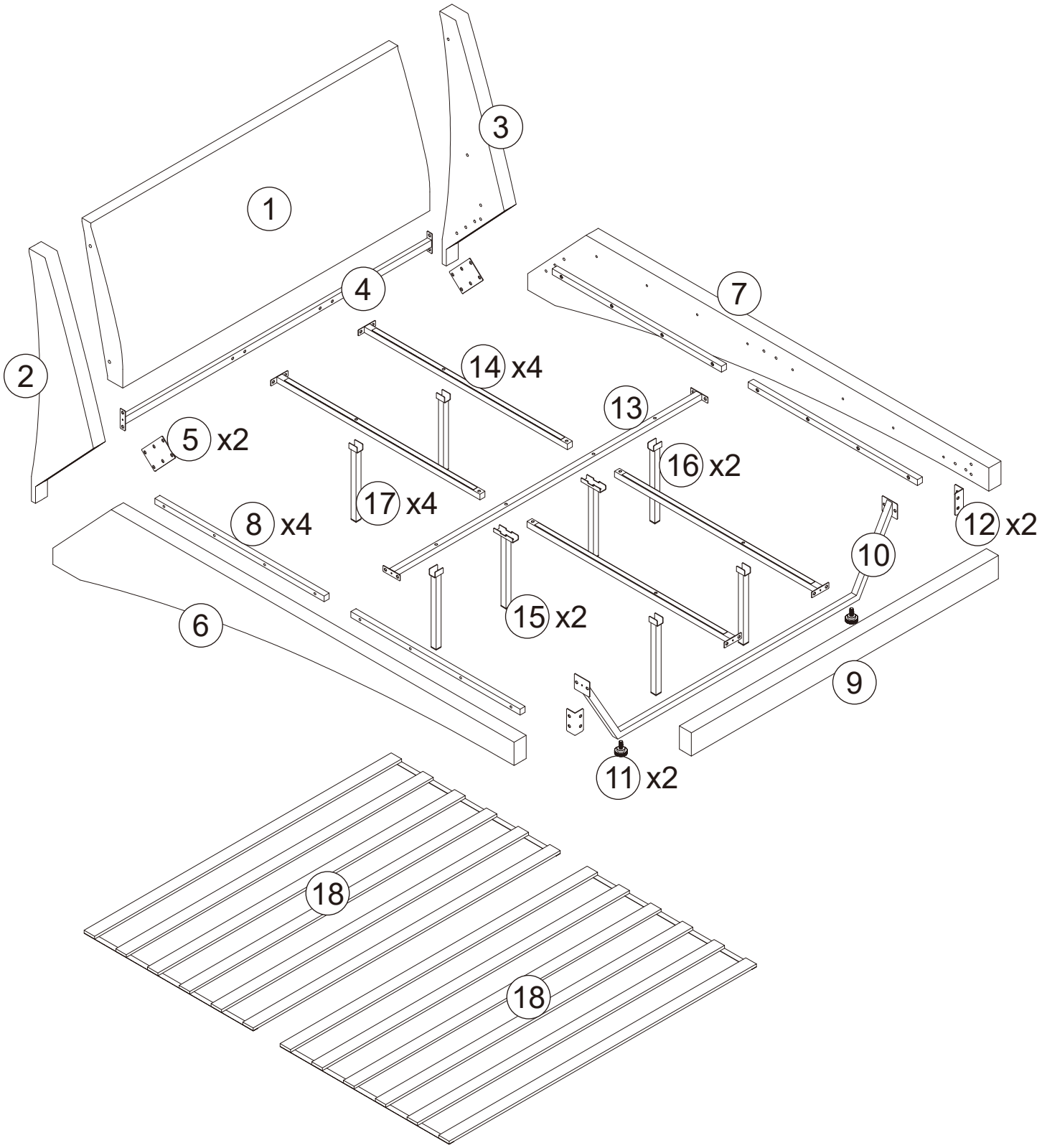

This Bed has multiple parts and may require up to 60 minutes to assemble.

To give you an overview of the Bed parts, the above picture is to help you put the various Bed parts into perspective.

Please read through the instructions below to familiarise yourself with the parts and steps before assembly.

STEP 1

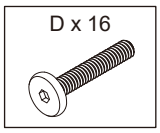

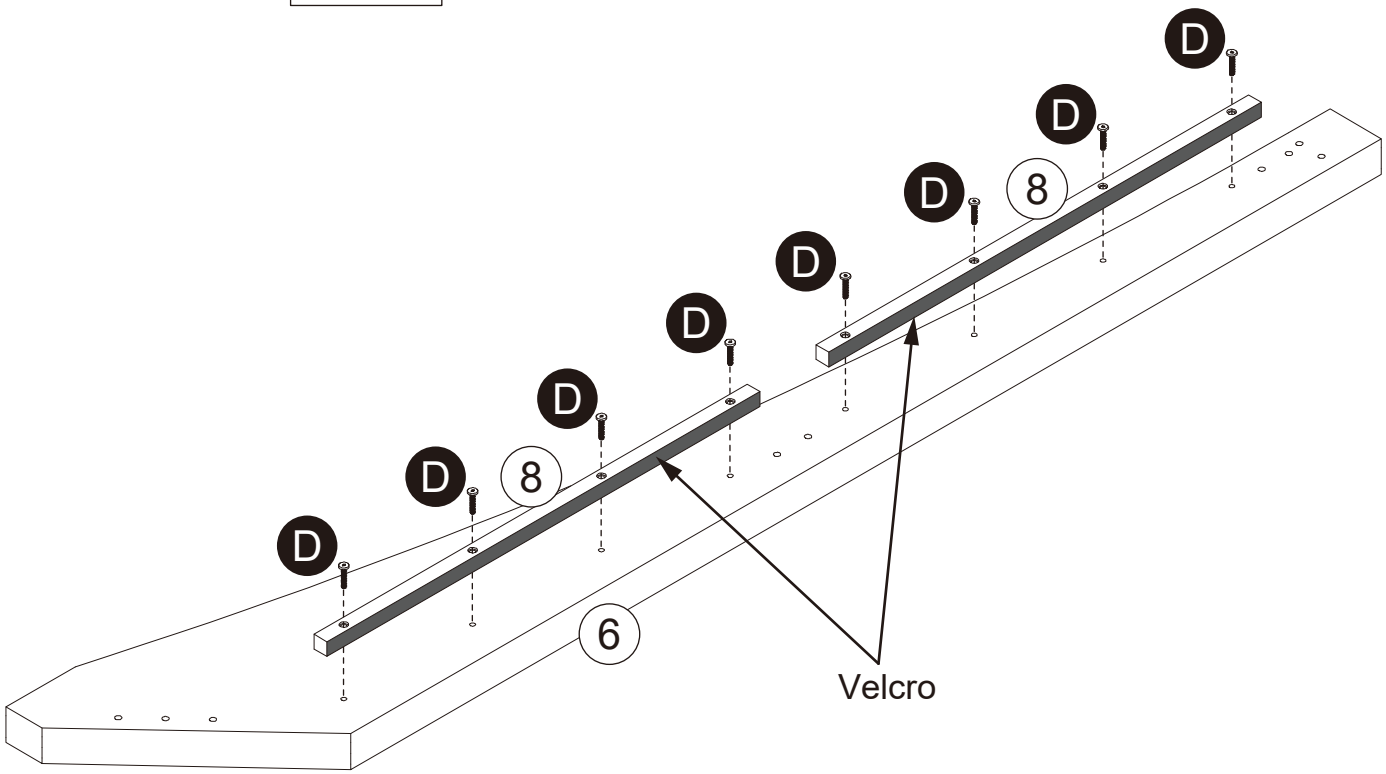

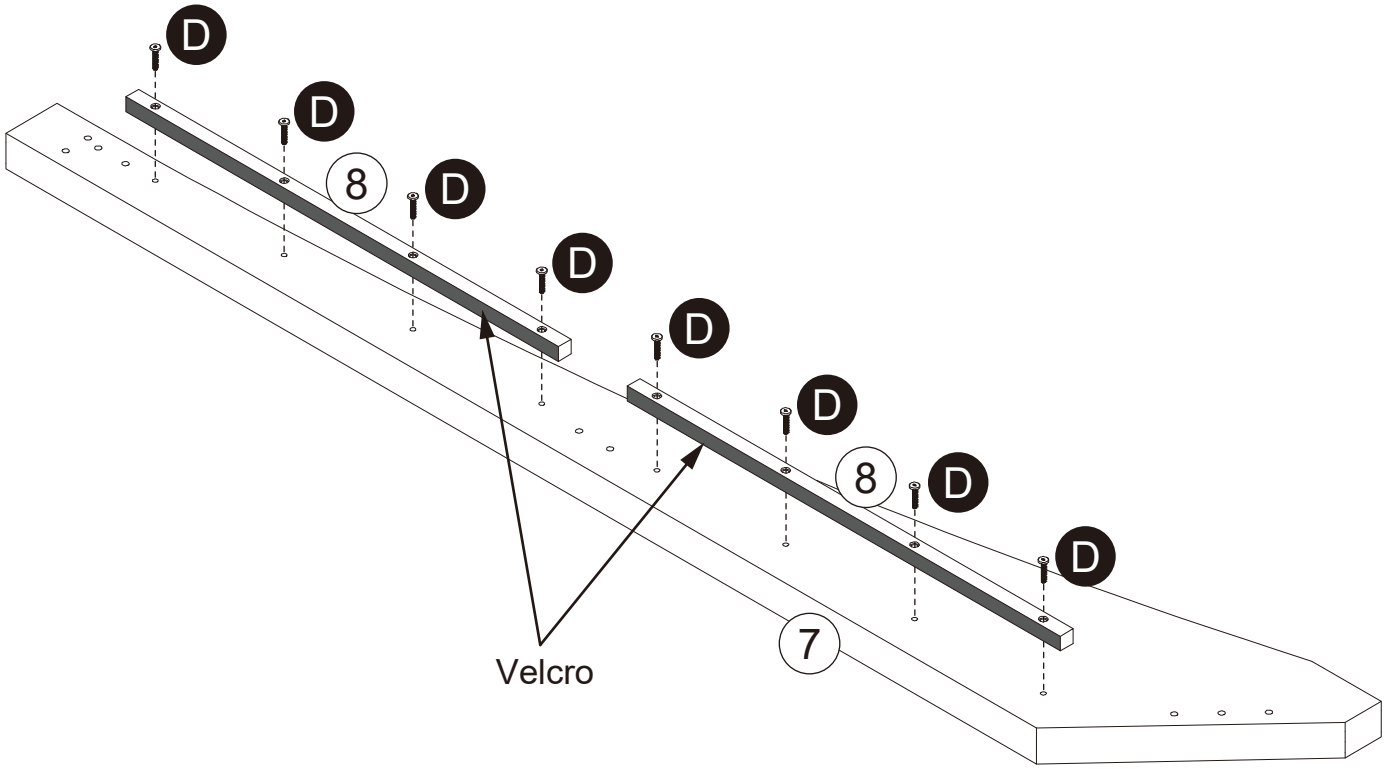

Attach Slat Rail (4) x4 to Bedside Panels (6 & 7) using Bolts (D) with Allen Key(E).

STEP 2

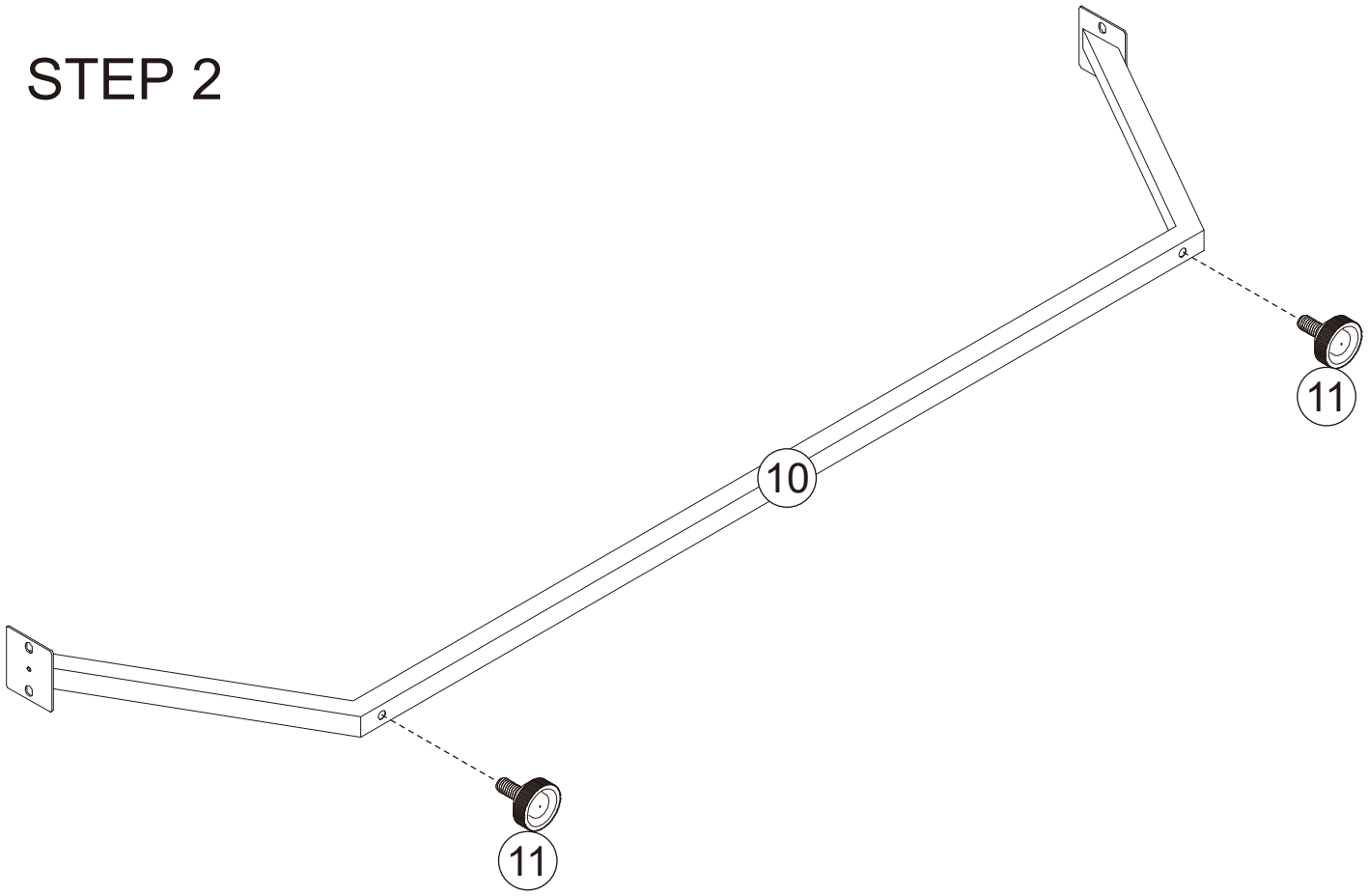

Install Footboard Feet (11) x2 to Footboard Leg (10).

STEP 3

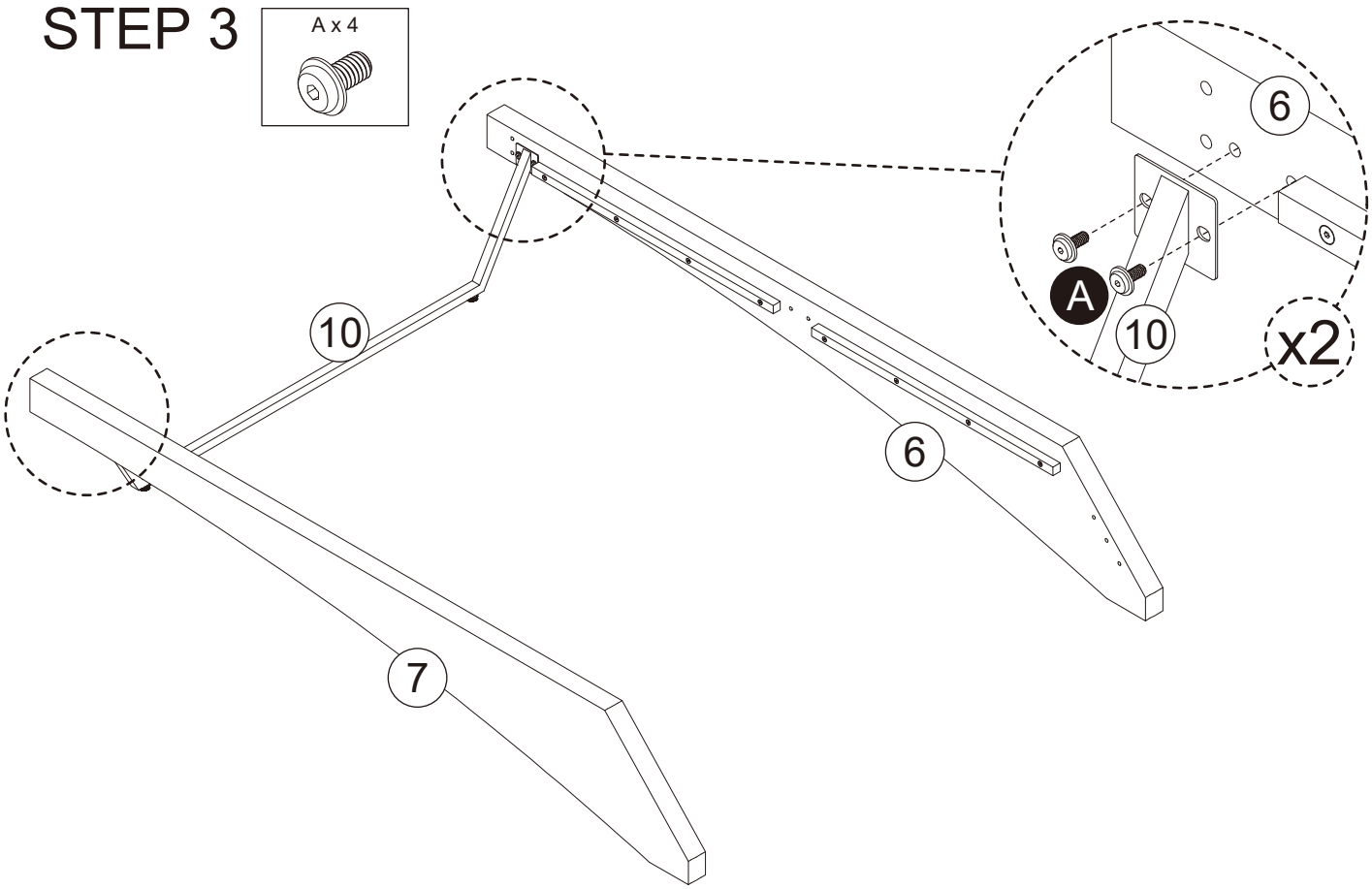

Attach Footboard Leg (10) to Bedside Panels (6 & 7) using Bolts (A) with Allen Key(E).

STEP 4

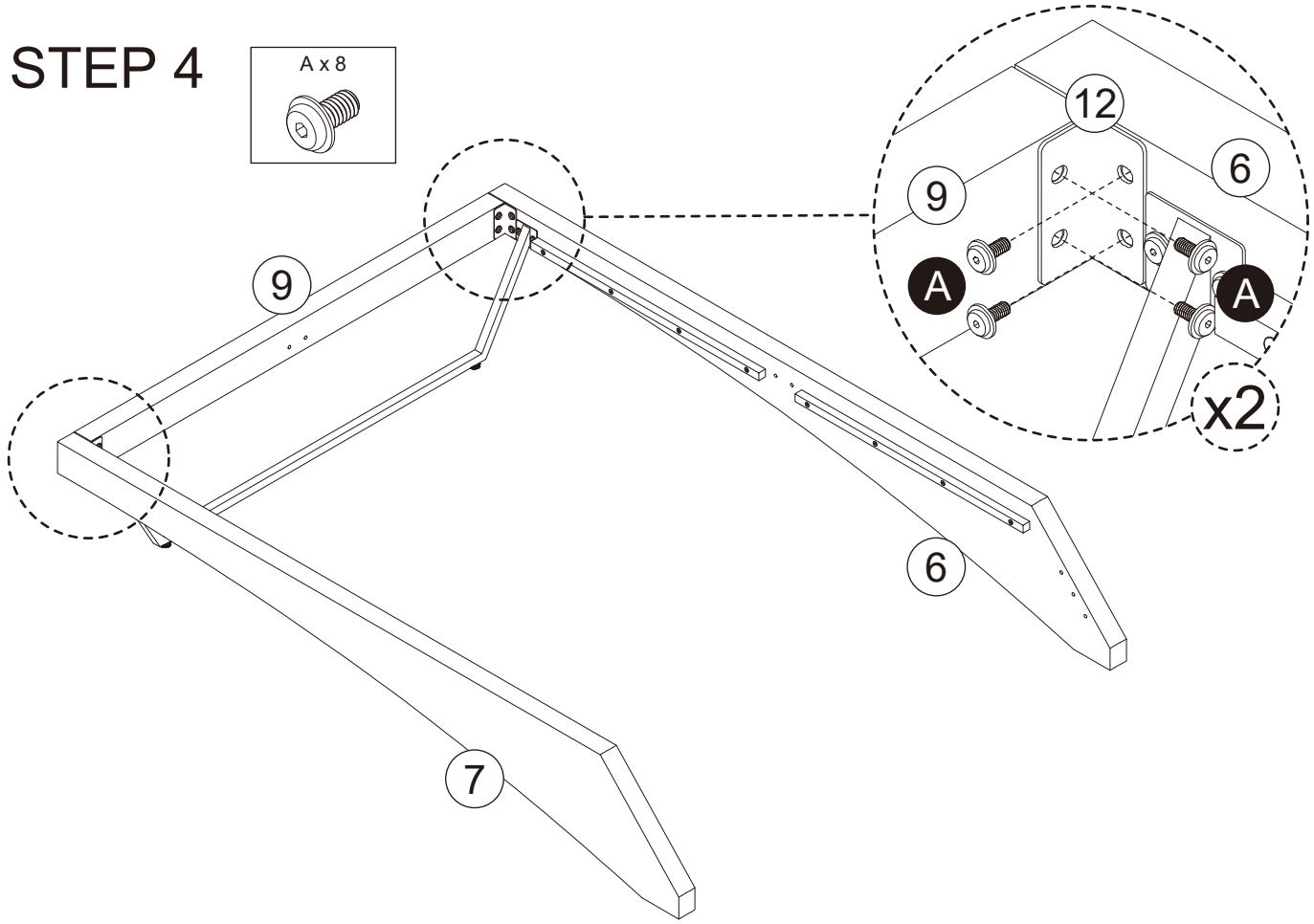

Attach Bracket (12) x2 to Bedside Panels (6 & 7) and Footboard (10) using Bolts (A) with Allen Key(E).

STEP 5

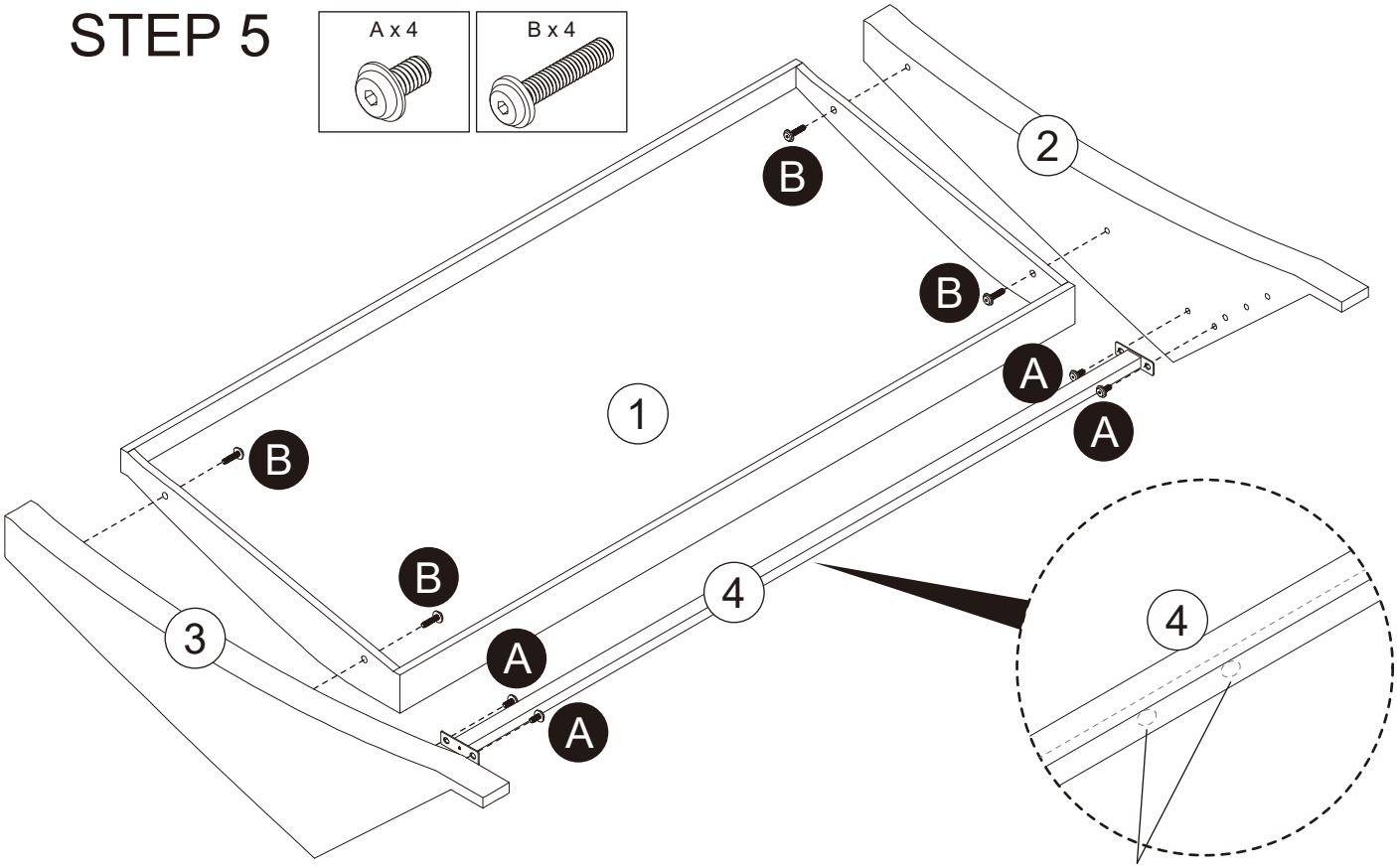

The holes of PART 4 facing downwards.

Attach Headboard Panels (2 &3) to Headboard (1) and Headboard Stretcher (4) using Bolts (A &B) with Allen Key(E).

STEP 6

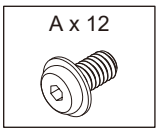

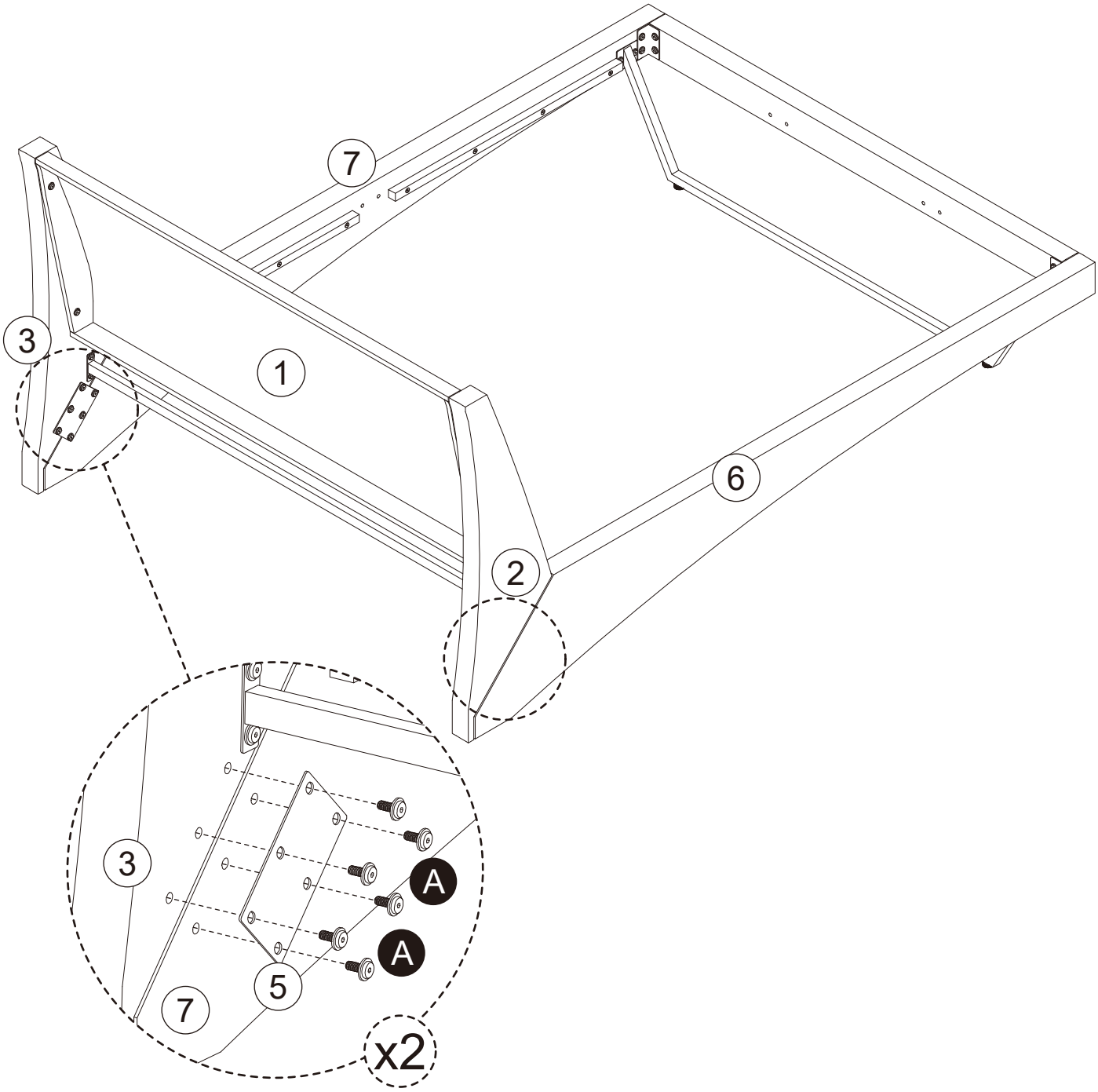

Attach Bracket (5) x2 to Bedside Panels (6 & 7) and Headboard Panels (2 &3) using Bolts (A) with Allen Key(E).

STEP 7

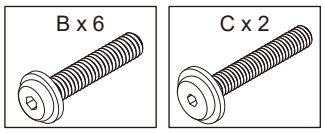

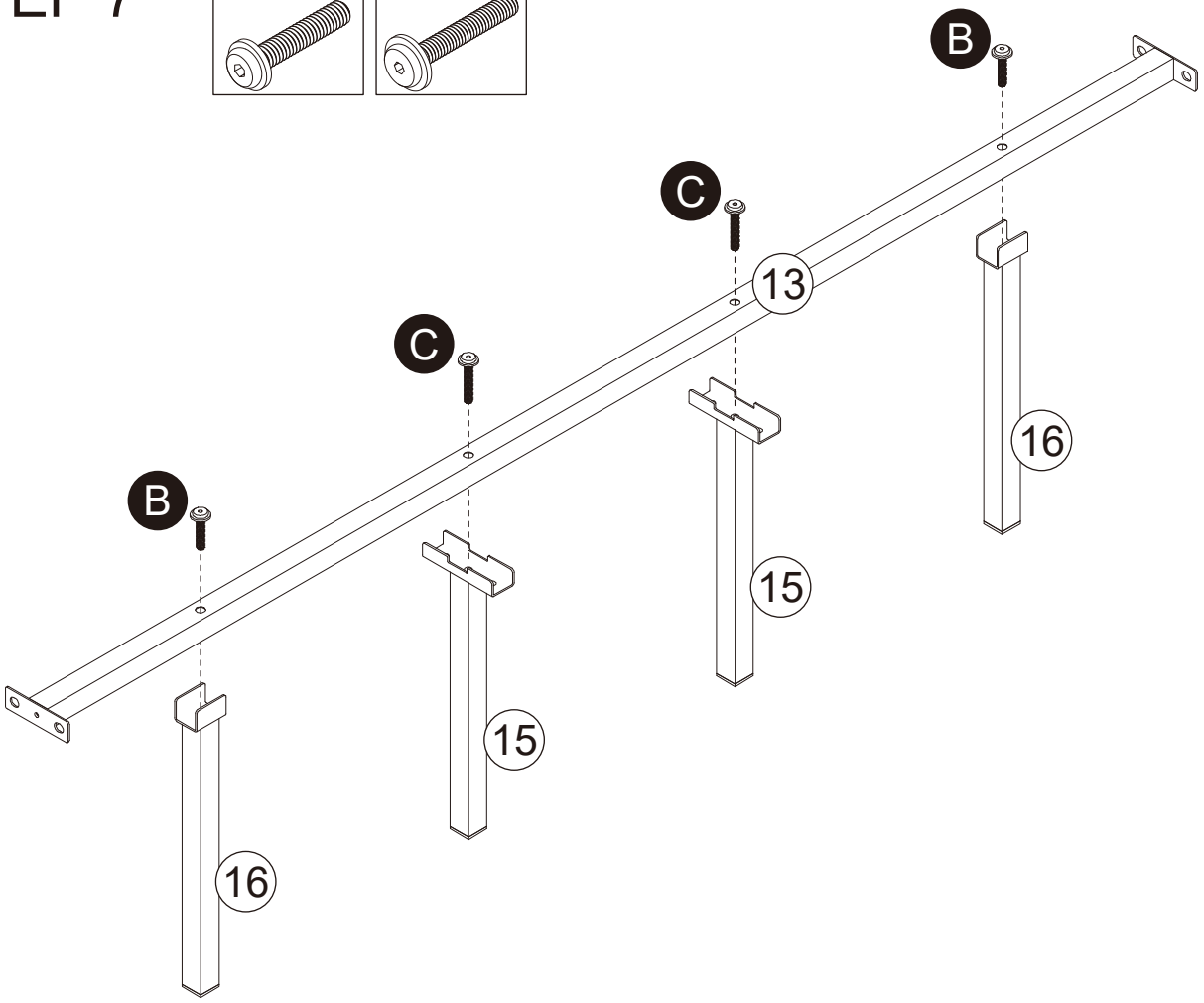

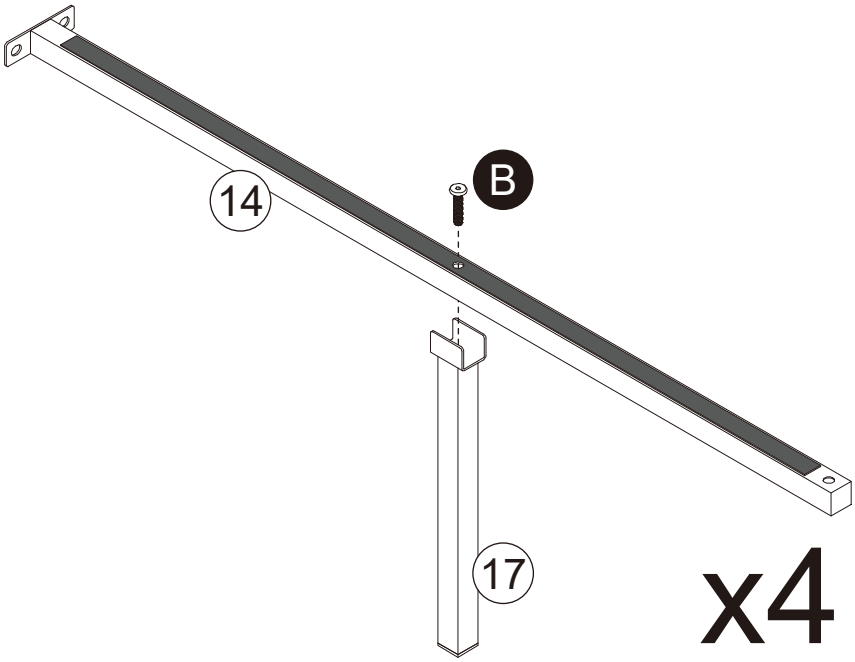

Attach Center Support Leg (15) x2 and Center Slat Support Legs (16) x2 to Center Slat (13) using Bolts (B &C) with Allen Key(E).

Attach Center Center Rail Support Legs (17) x4 to Center Rails (14) x4 using Bolts (B) with Allen Key(E).

STEP 8

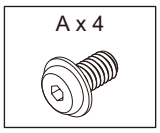

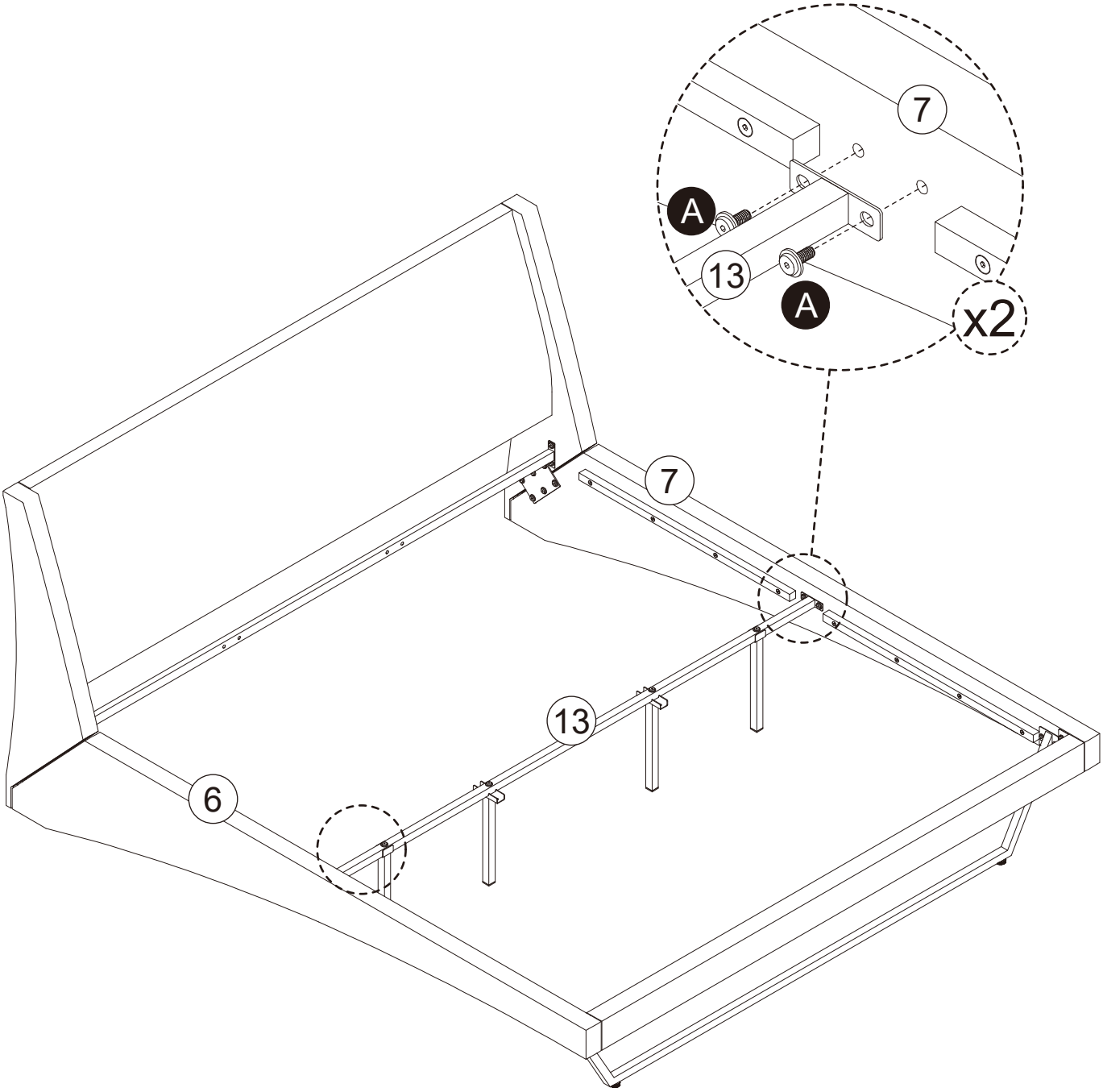

Attach Center Slat (13) to Bedside Panels (6 & 7) using Bolts (A) with Allen Key(E).

STEP 9

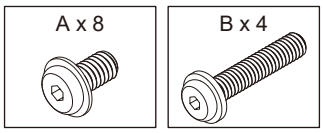

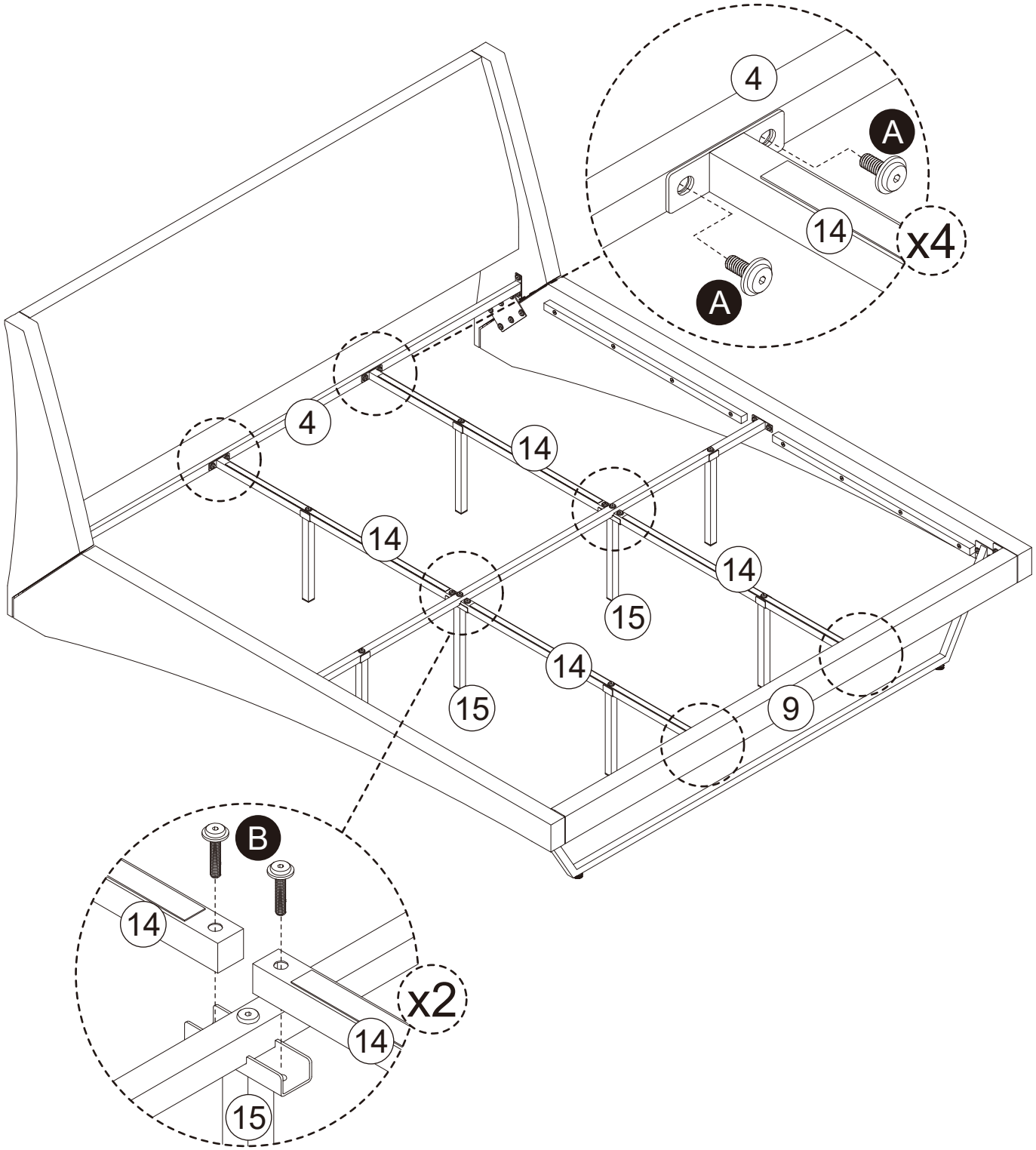

Attach Center Rails (14) x4 to Headboard Stretcher (4), Footboard (9) and Center Support Leg (15) x2 using Bolts (A & B) with Allen Key(E).

STEP 10

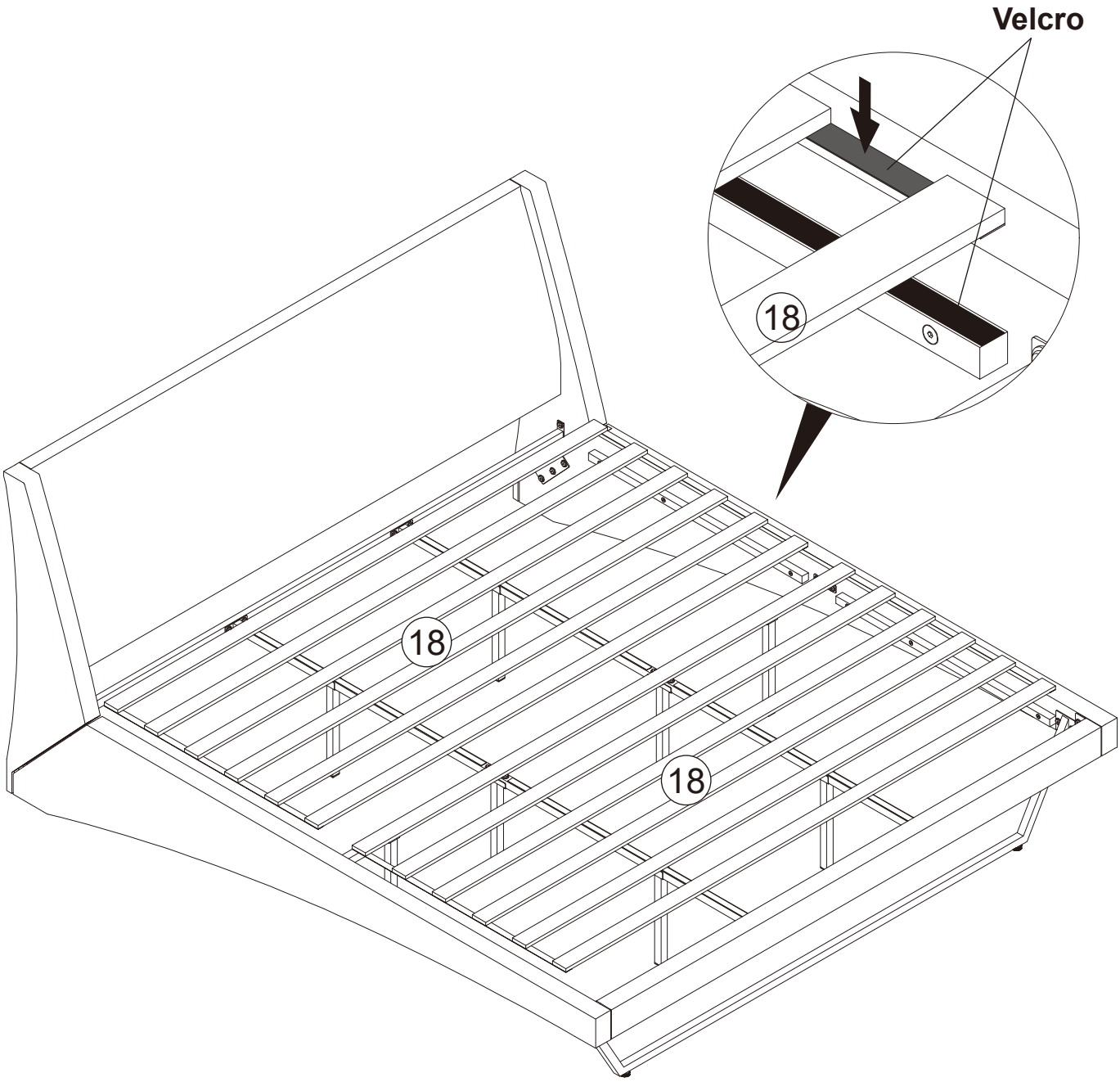

Place Slat (18) x2 to Salt Rail (8) as shown.

Your Bed is ready for use.

Note: After assembly and before using the bed, inspect to make sure all parts are properly connected and securely fastened.