ASSEMBLY INSTRUCTIONS

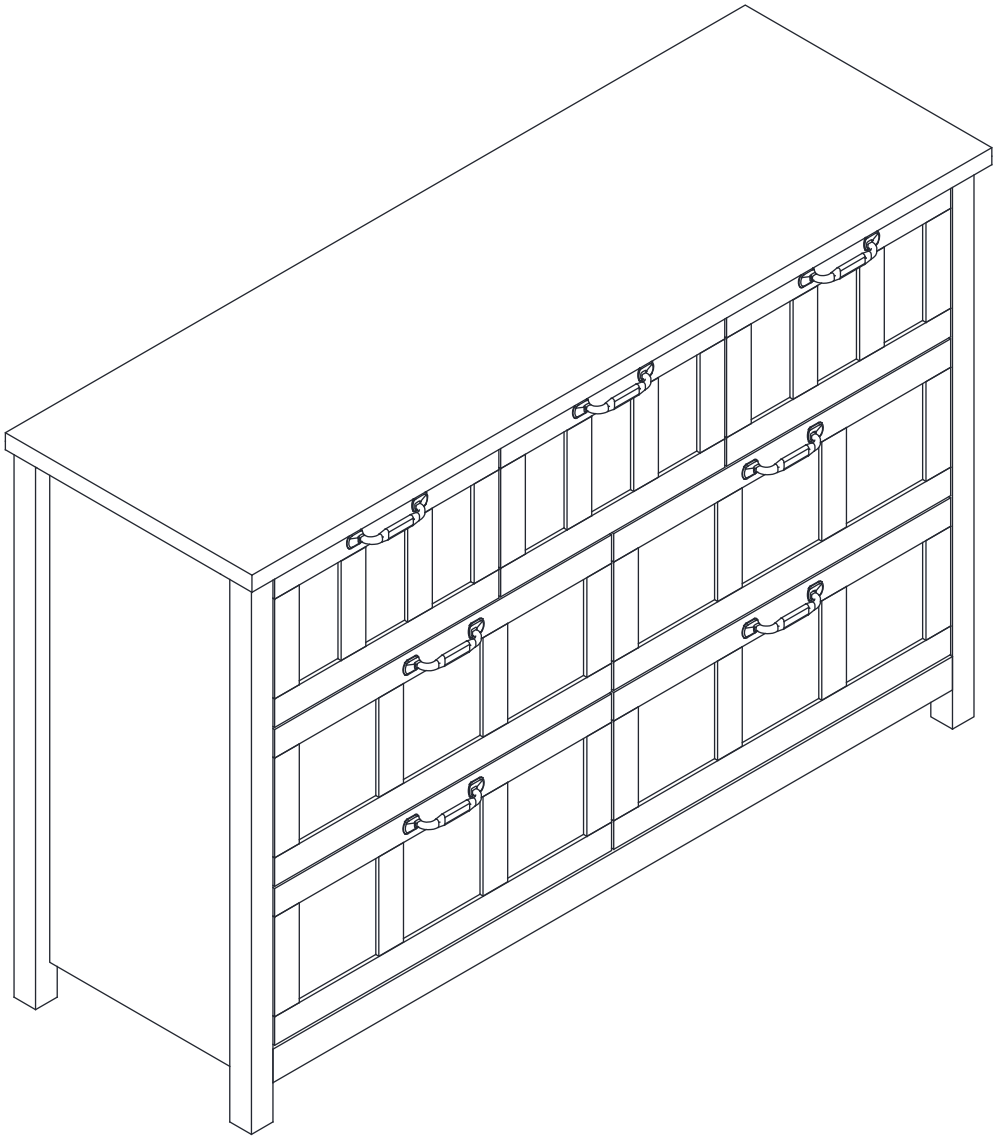

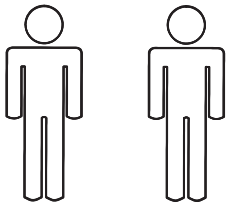

2 people for assembly

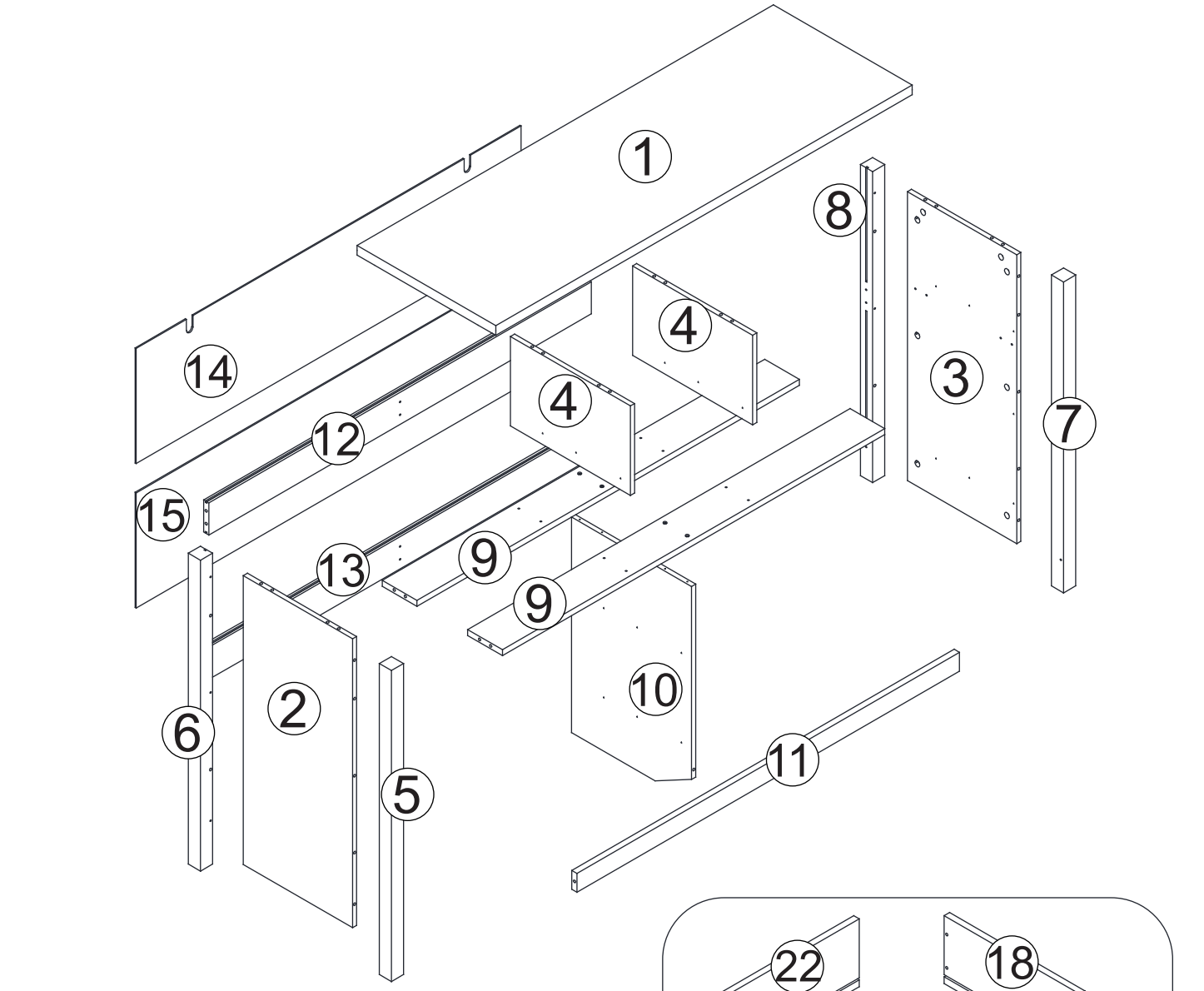
1
8
4
4
14
3
7
12
15
13
9
9
10
6
2
5
11

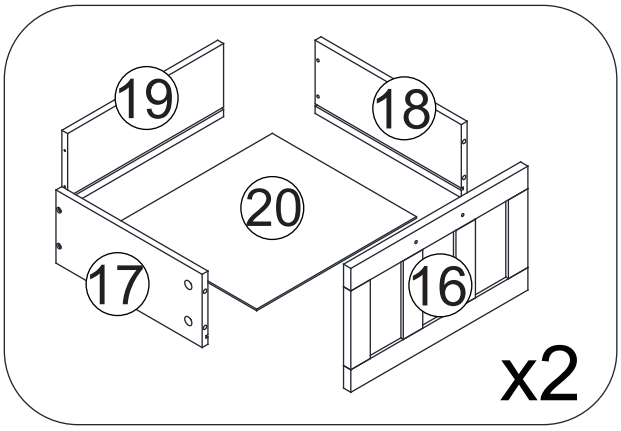
19
18
20
17
16
x2

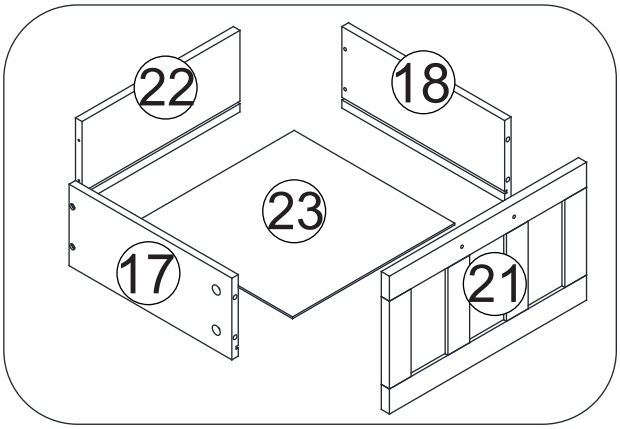
22
18
23
17
21

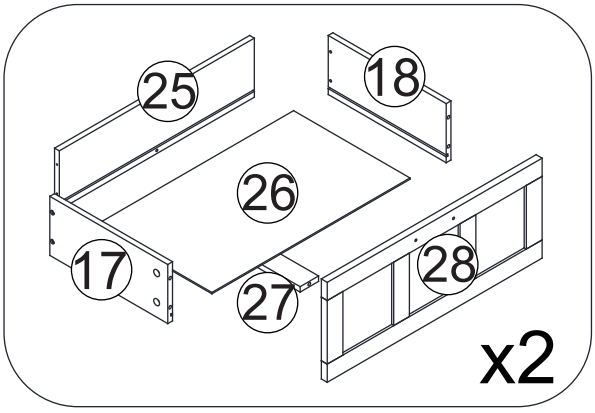
25
18
26
17
27
28
x2

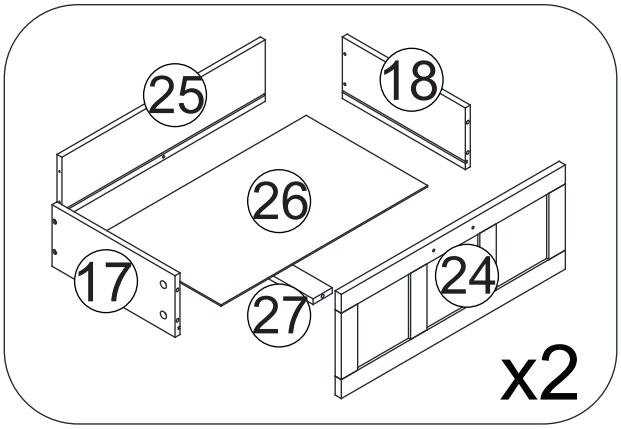
25
18
26
17
27
24
x2

Components - Fittings

Please check you have all the panels listed below

Note: The quantitie below are the correcet amount to complete the assembly. In some cases more fittings may be supplied than are required.

A	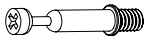 Φ6x35	71 PCS +1 PCS	B	 Φ15x10	71 PCS +1 PCS
C	 Φ6x30	16 PCS +1 PCS	D	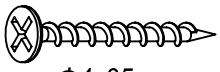 Φ4x35	32 PCS +4 PCS
E	 Φ3x12	46 PCS +7 PCS	F	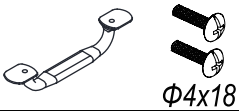 Φ4x18	7 PCS
G	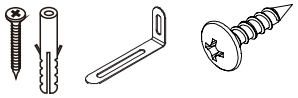	2 PCS	H	 Φ4x40	16 PCS
I	 Φ3x10	24 PCS	J	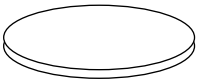	4 PCS
G	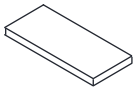	2 PCS			
CL	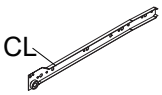 CL	7 PCS	DL	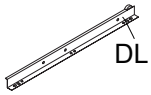 DL	7 PCS
CR	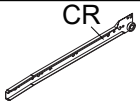 CR	7 PCS	DR	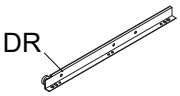 DR	7 PCS

PRODUCT ASSEMBLY

Step 1

A		22 PCS

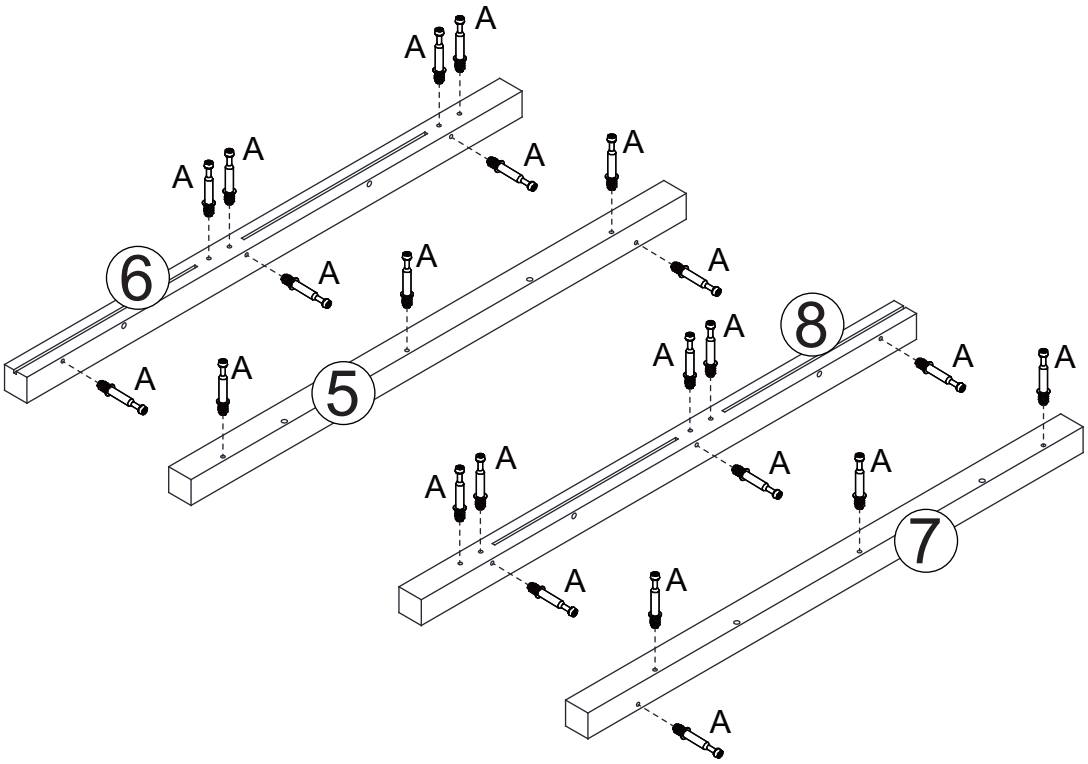

Step 2

A		8 PCS
C		8 PCS
B		12 PCS

Step 3

E	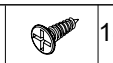	18 PCS
CL		3 PC
CR		3 PC

Note that the first hole of the slide rail and the leading hole of the board shall be positioned during the installation of the slide rail!

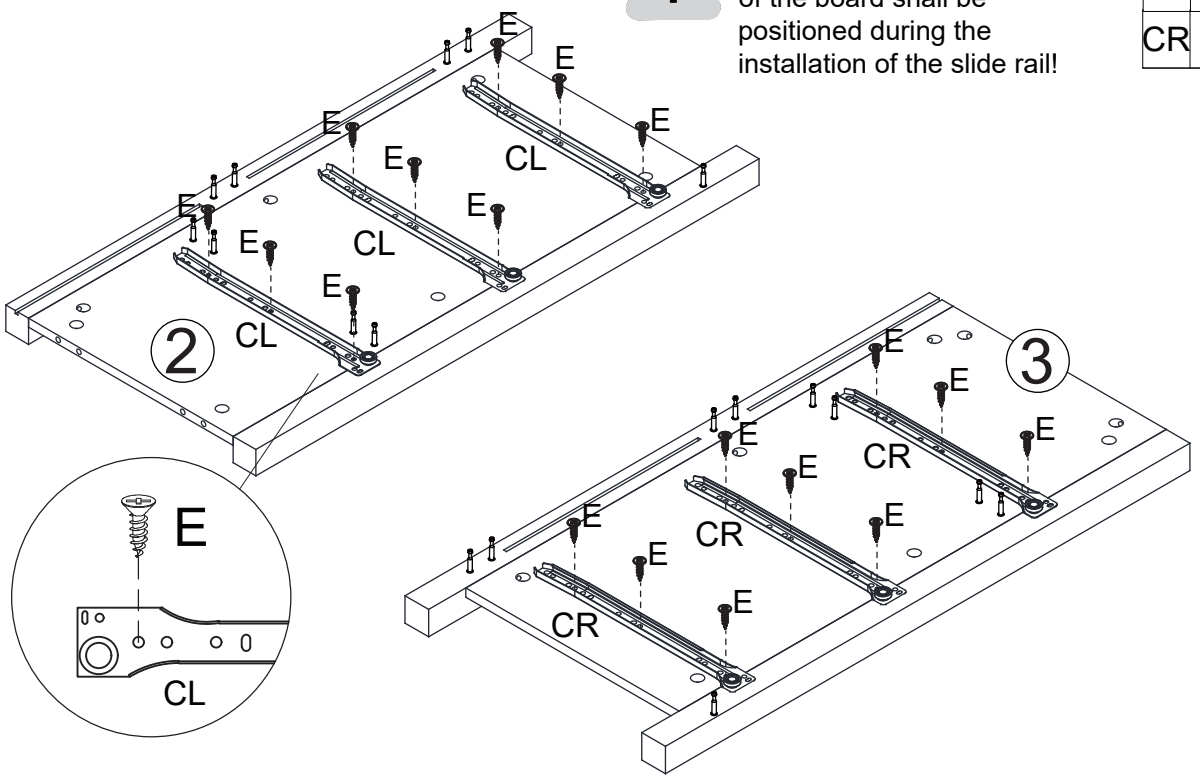

Step 4

I		12 PCS
CL		2 PC
CR		2 PC

Note that the first hole of the slide rail and the leading hole of the board shall be positioned during the installation of the slide rail!

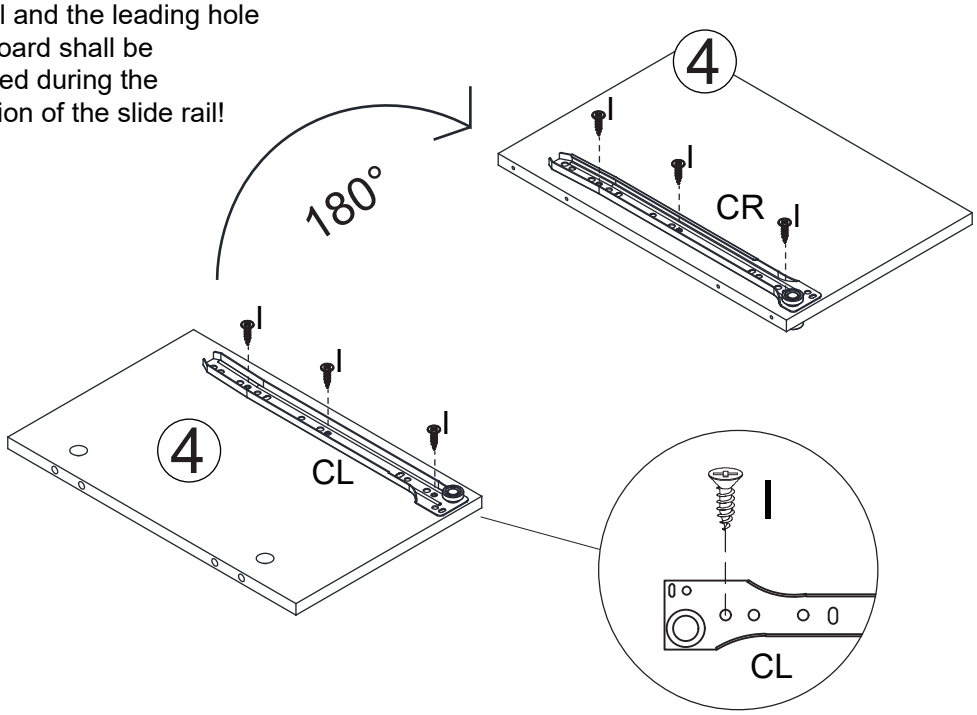

x2

I		12 PCS
CL		2 PCS
CR		2 PCS

Step 5

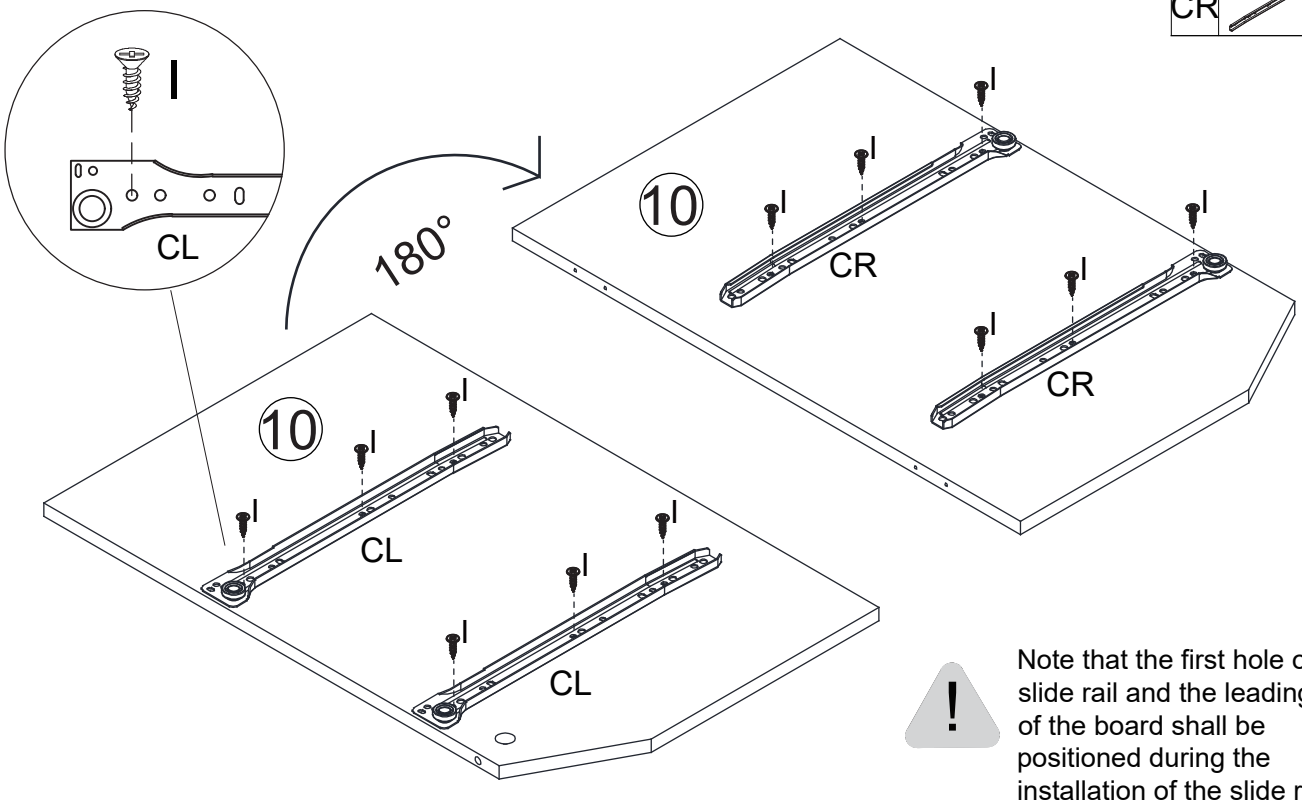

Note that the first hole of the slide rail and the leading hole of the board shall be positioned during the installation of the slide rail!

A		1 PC

Step 6

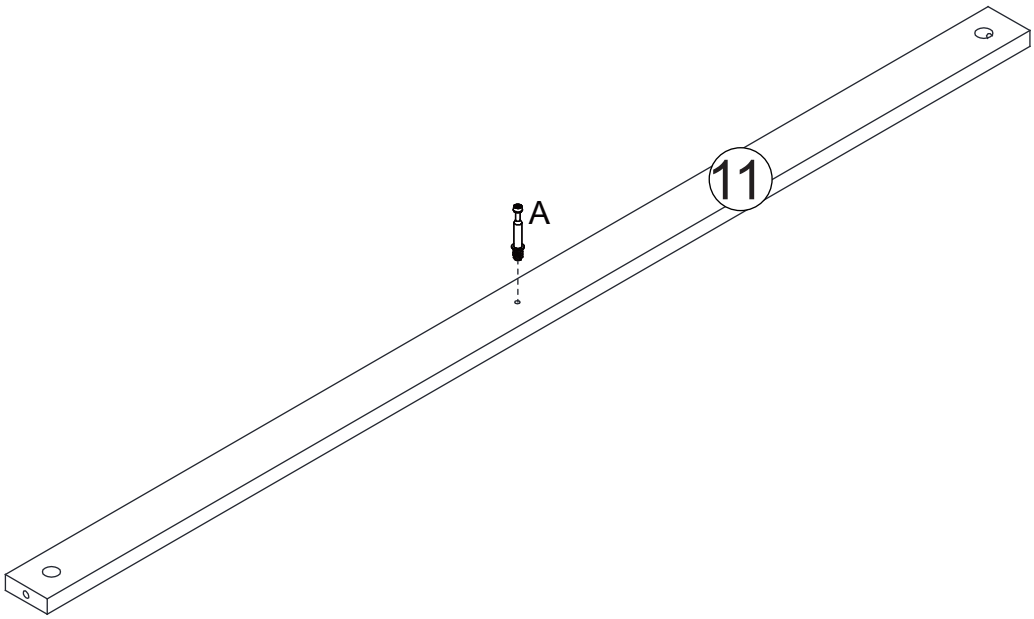

Step 7

B		1 PC

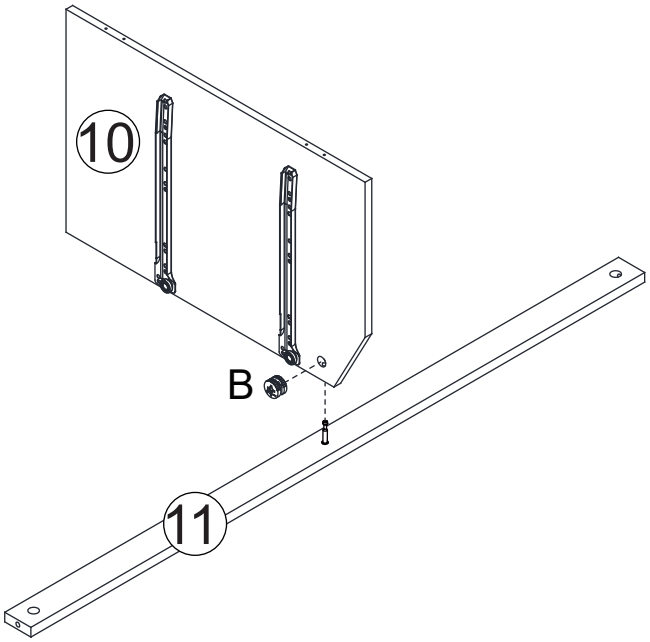

Step 8

H	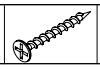	4 PCS

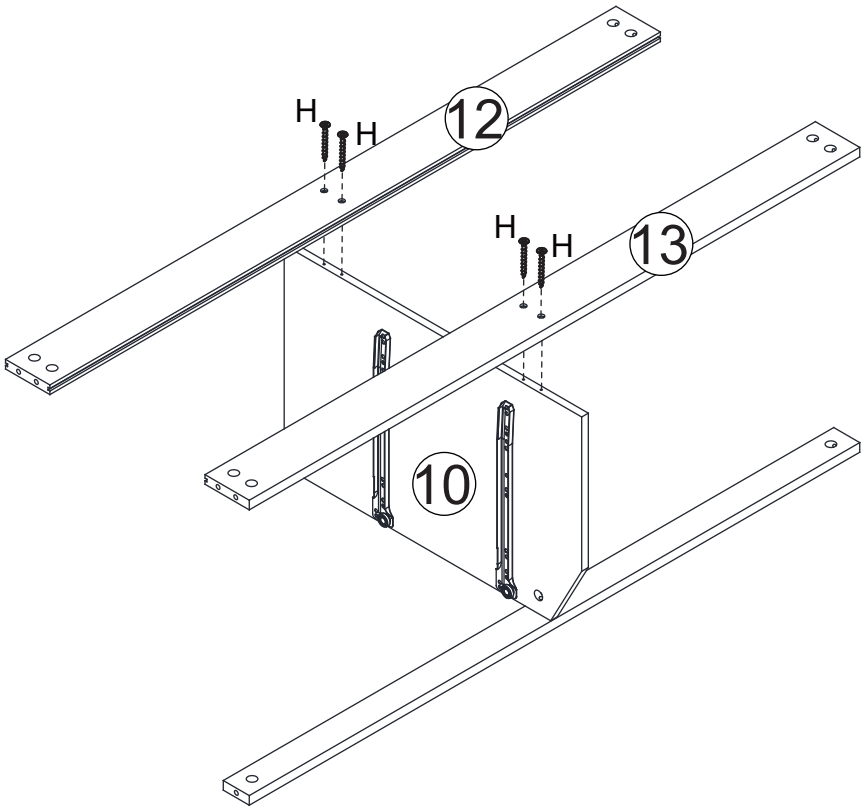

H 4 PCS

Step 9

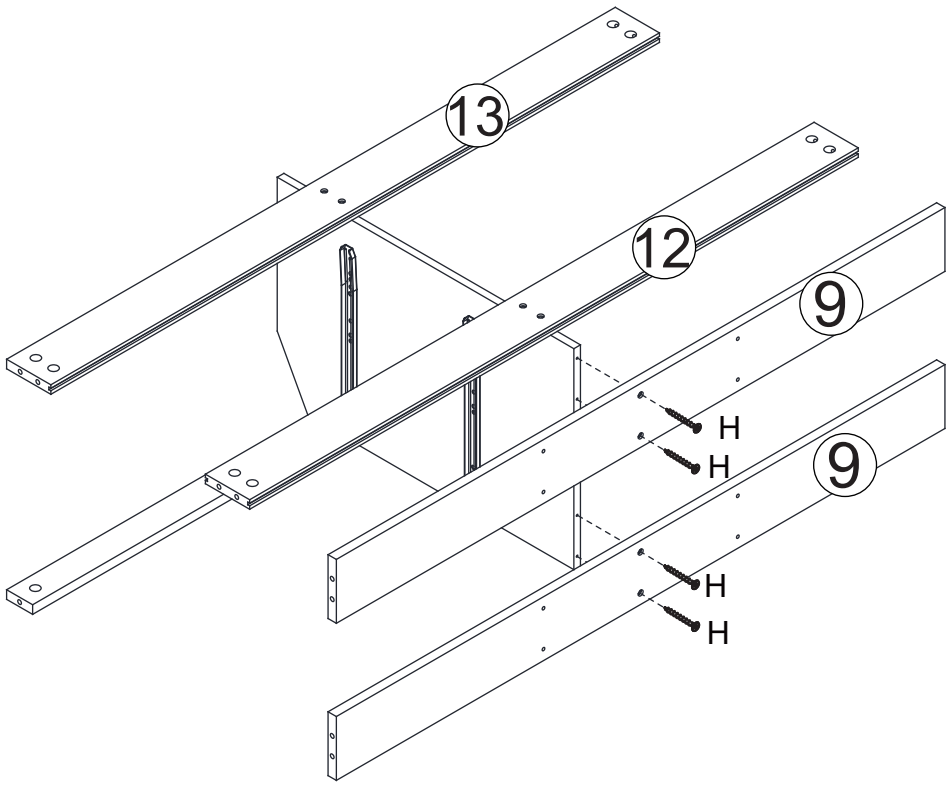

H 8 PCS

Step 10

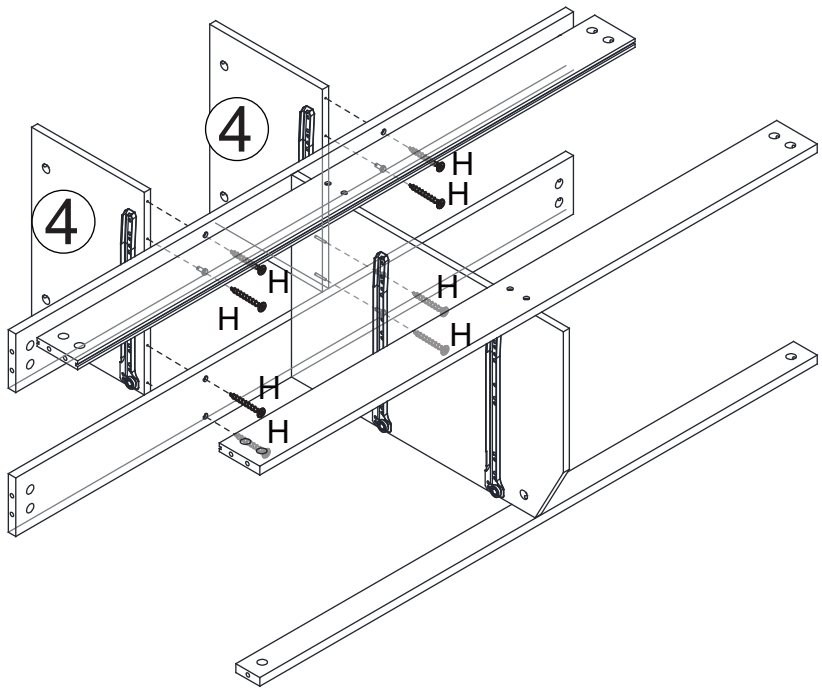

B		9 PCS

Step 11

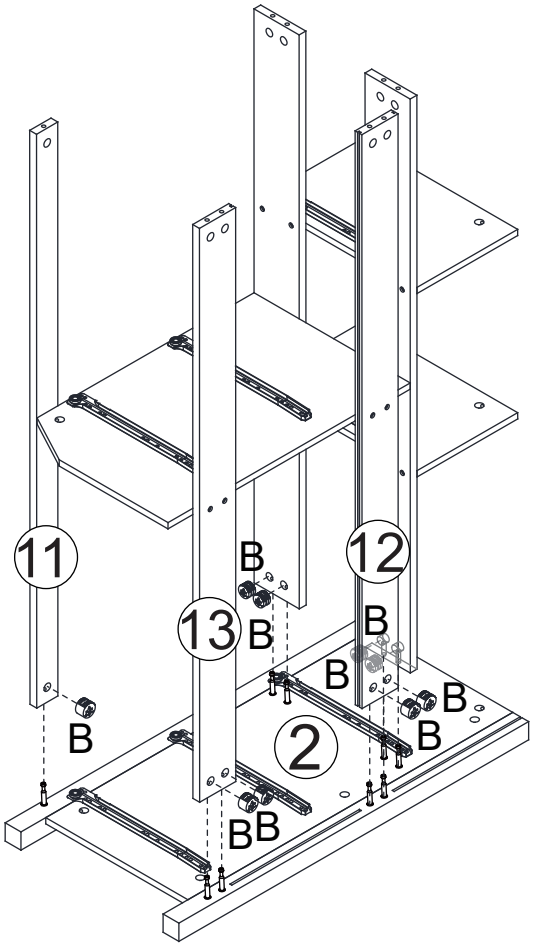

Step 12

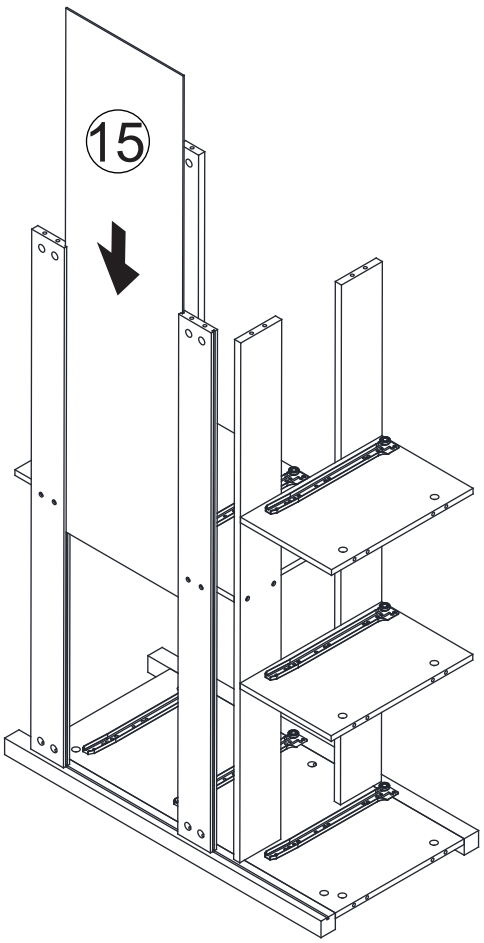

B		9 PCS
J		4 PCS
G		2 PCS

Step 13

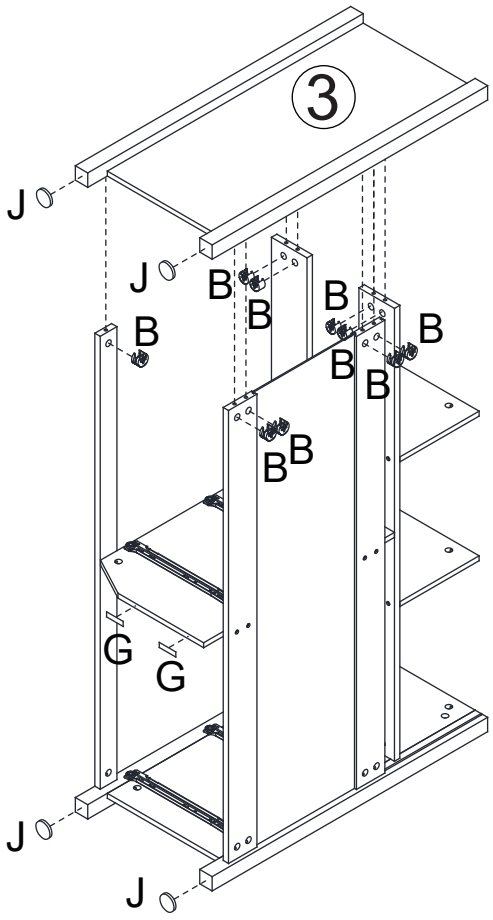

A		8 PCS
G		2 PCS

Step 14

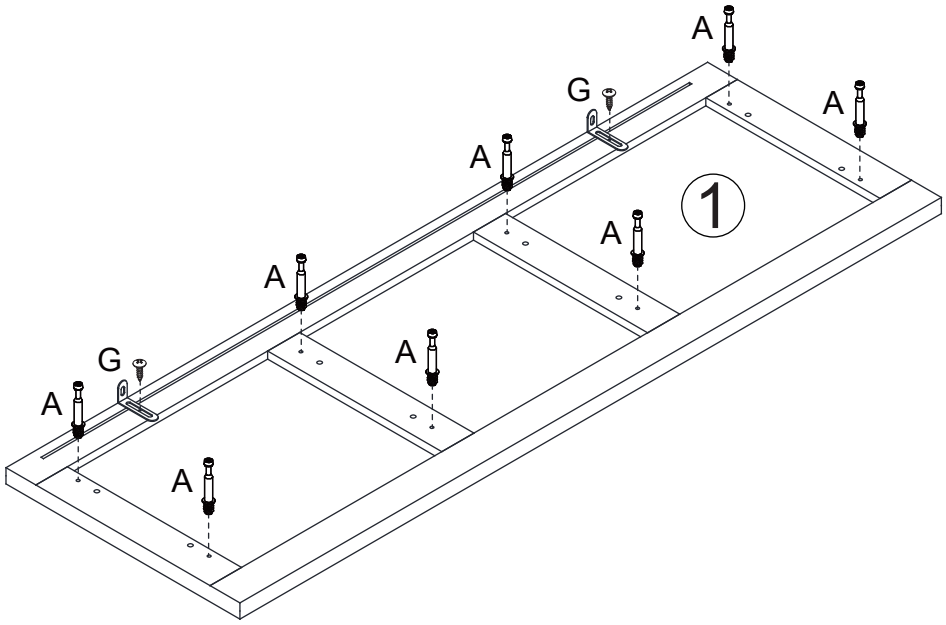

Step 15

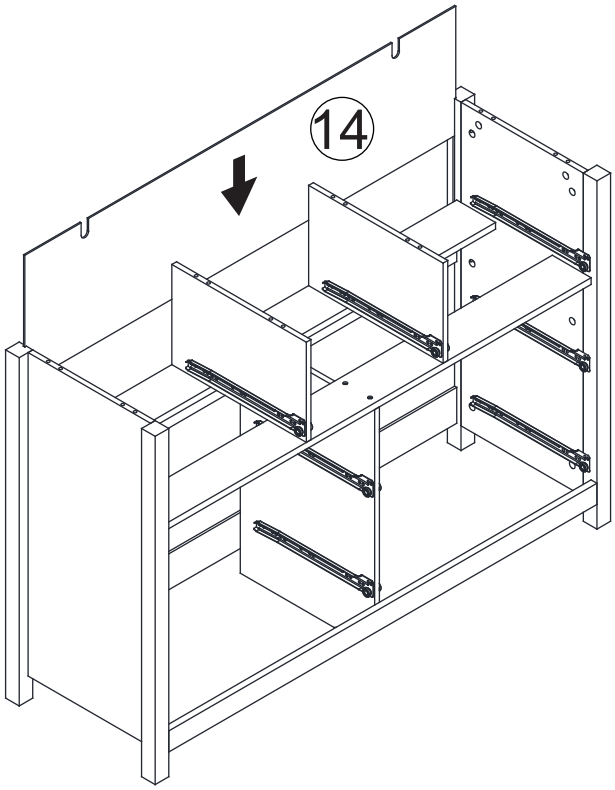

Step 16

C		8 PCS
B		8 PCS

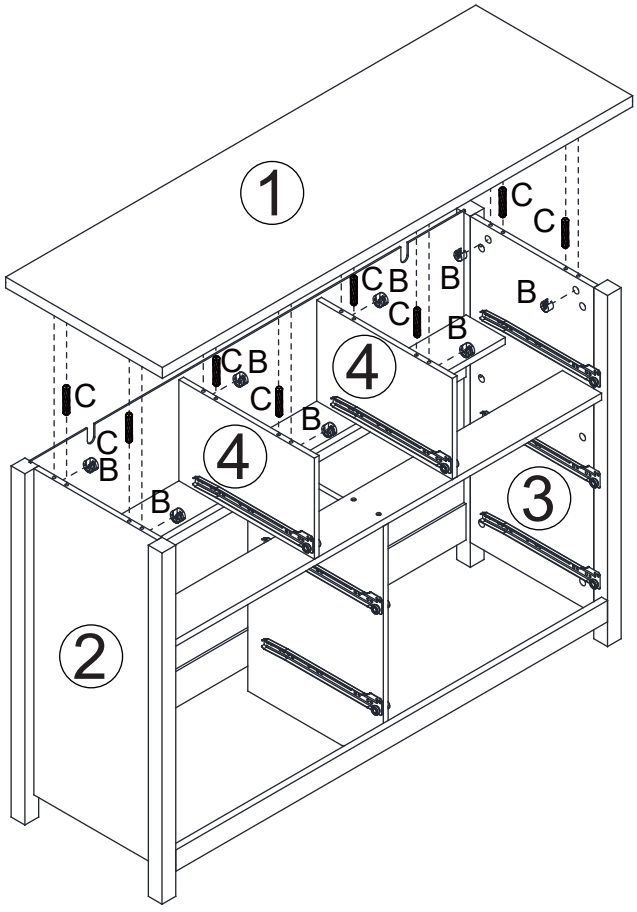

G		2 PCS

Step 17

Parts Enclosed

G1	G2	G3	G4

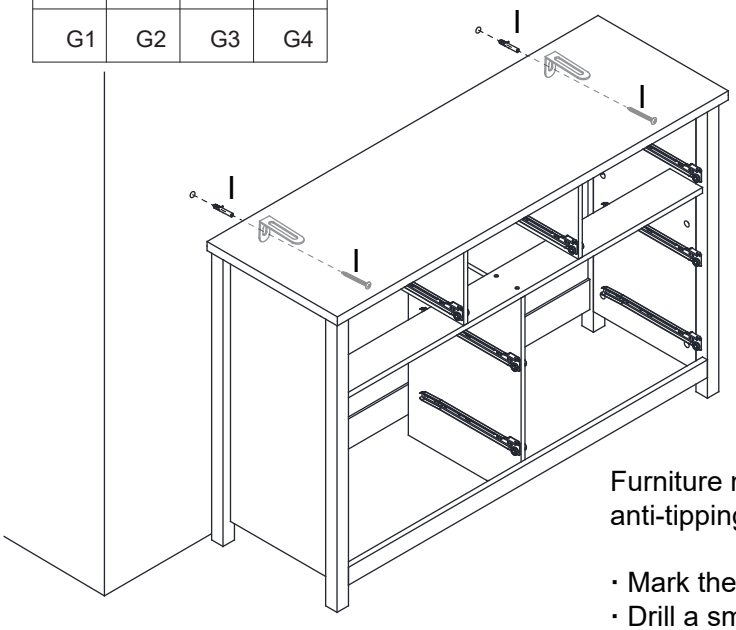

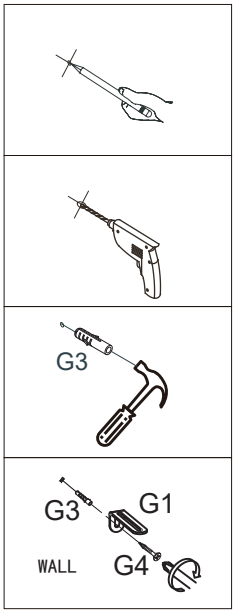

Furniture must permanently fixed to the wall stud with included anti-tipping device to prevent the furniture from tipping over.

- Mark the drill position on the wall with a pencil.
- Drill a small hole on the marked position.
- Insert a wall anchor into the drilled hole.
- Fixed the anti tipping strap to the wall with provided screws.

A		32 PCS
F		7 PCS

Step 18

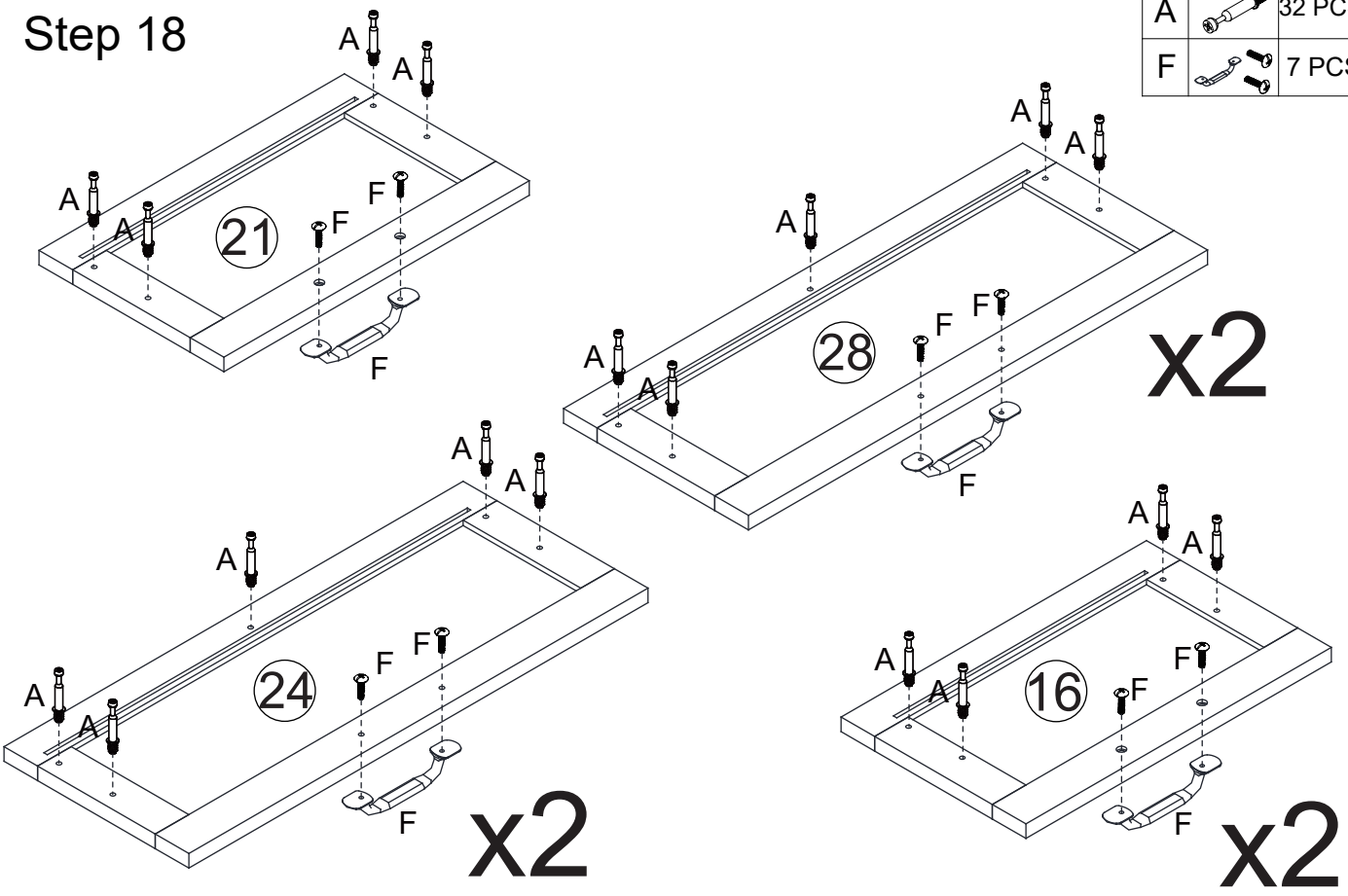

D 32 PCS

Step 19

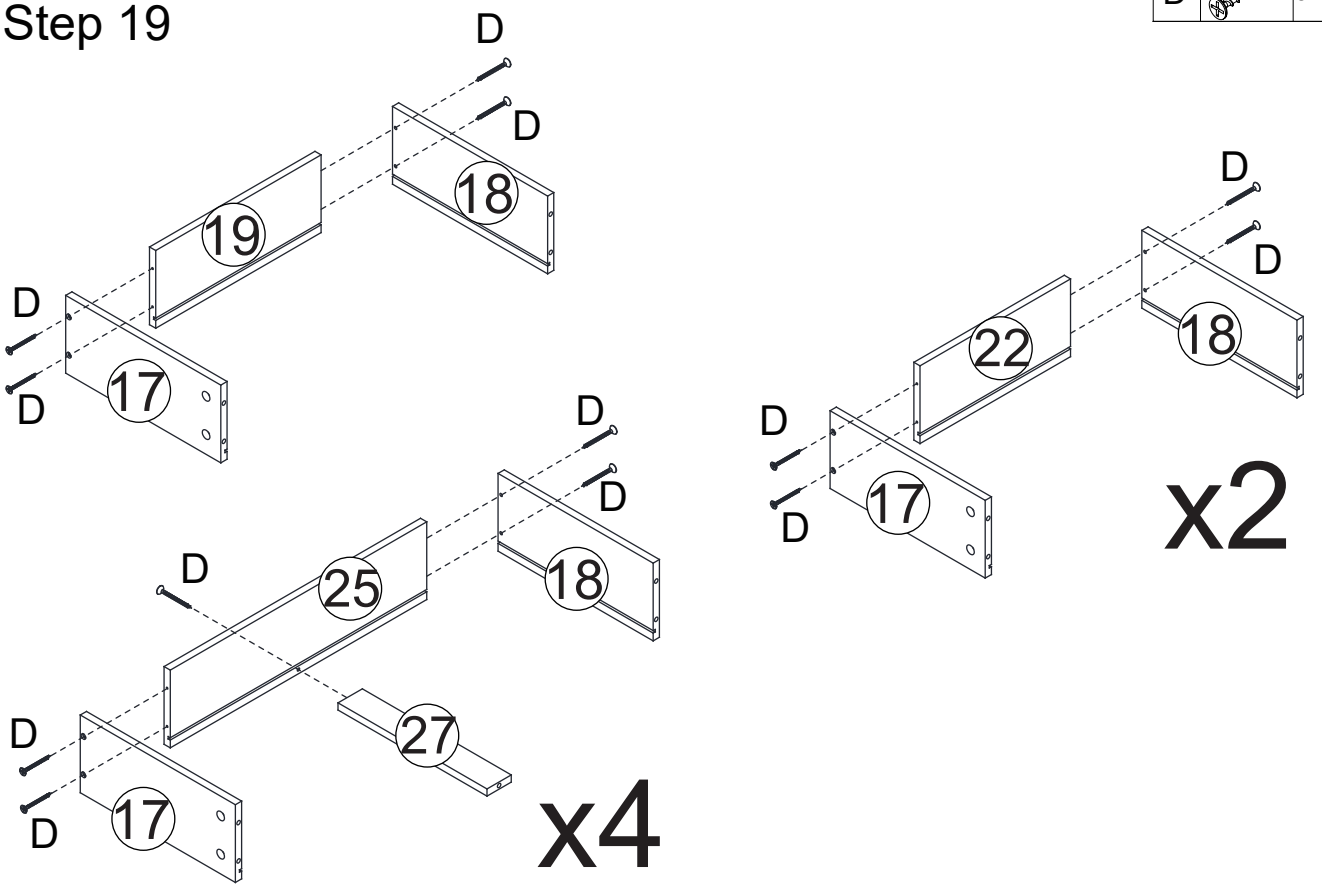

Step 20

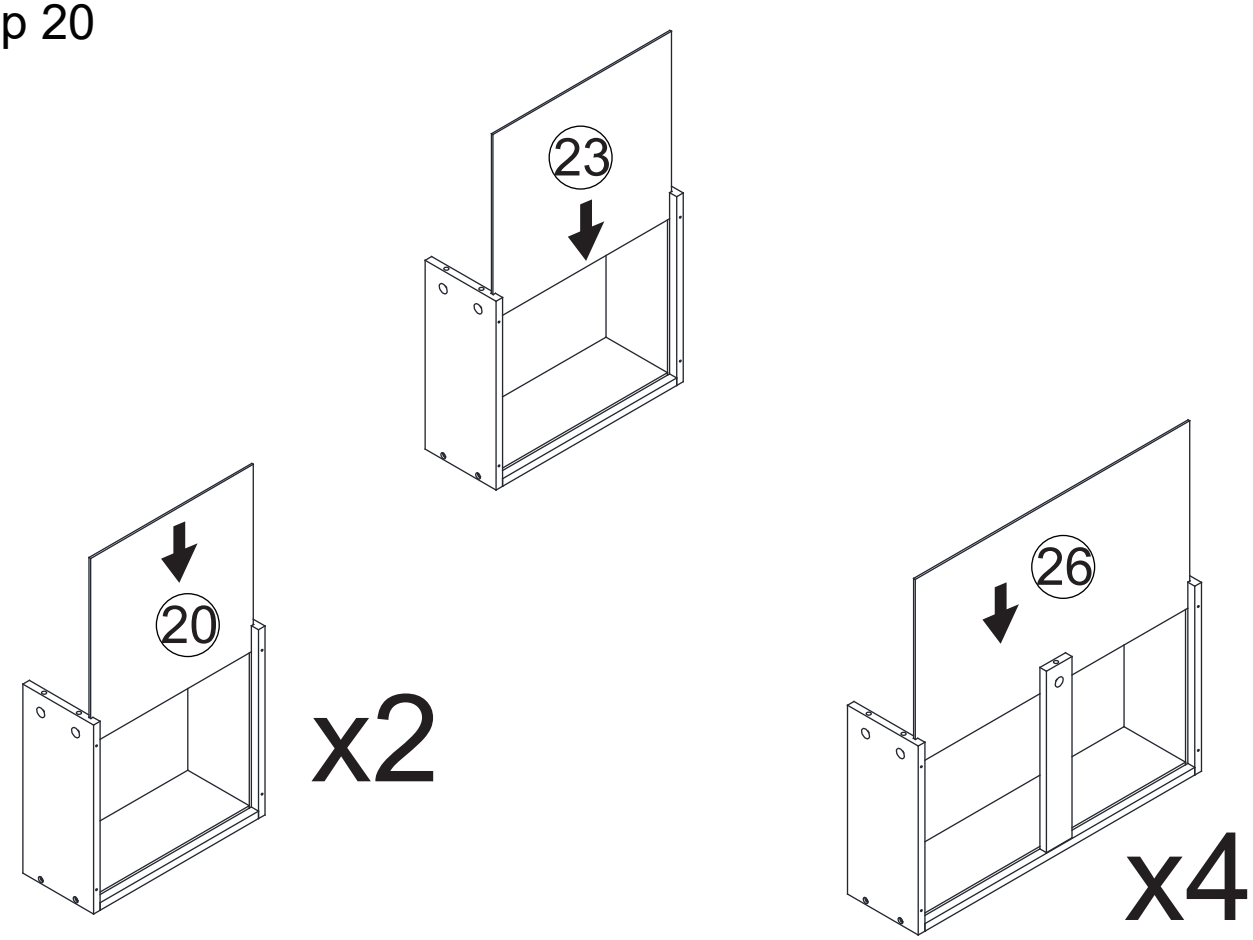

B		32 PCS

Step 21

Step 22

E		28 PCS
DL		7 PCS
DR		7 PCS

Step 23

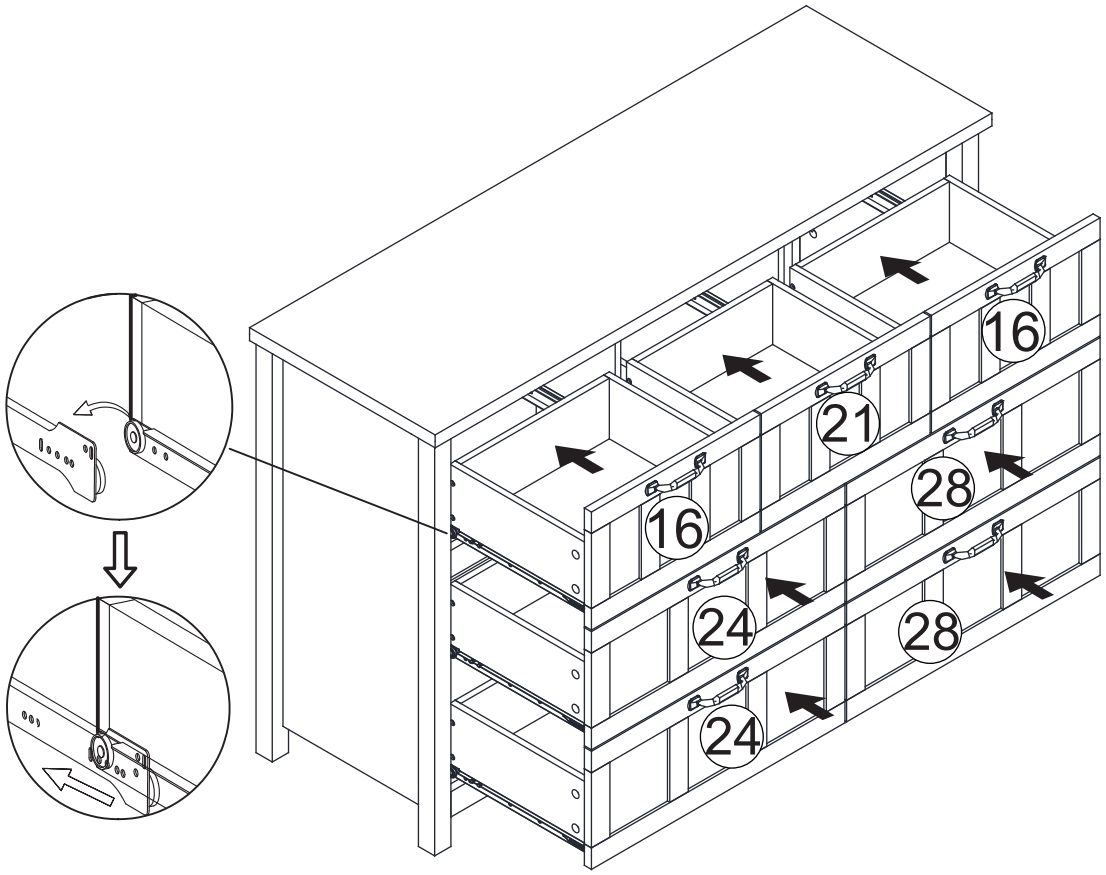

A Guide to Wall Mounting & Fixings

Important note:

If plastic wall plugs (rawl plugs) are supplied with your product, eg:



- these are suitable for use in masonry walls

If you are in any doubt about the correct wall plugs for your wall, seek professional advice.

Failure of the product due to using the incorrect fixings is the responsibility of the installer.

Important: when drilling into walls always check that there are no hidden wires or pipes etc.

Make sure that the screws and wall plugs being used are suitable for supporting your unit. Consult a qualified tradesperson if you are unsure.

Hints:

1. General rule: always use a larger screw and wall plug if you are not sure.
2. Ensure you use the recommended drill bit to match the wall plug and hole size.
3. Ensure you drill the hole horizontally; do not force the drill or enlarge the hole.
4. Take extra care when drilling high walls, ceilings and ceramic tiles. Ensure wall plugs are inserted beyond the thickness of the ceramic tiles to avoid the tiles splitting or cracking.
5. Ensure wall plugs are well fitted and are a tight fit in the drilled hole.

Types of walls

You can use one of the following types of wall plug if your walls are made of brick, breeze block, concrete, stone or wood.

No. 1 “General Purpose” wall plug

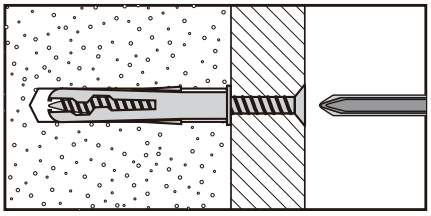

Generally aerated blocks should not be used to support heavy loads, use a specialist fitting in this case. For light loads, general purpose wall plugs can be used.

No. 3 “Cavity Fixing” wall plug

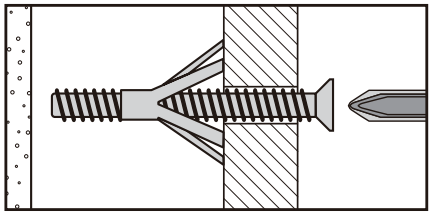

For use with plasterboard partitions or hollow wooden doors.

No. 5 “Hammer Fixing” wall plug

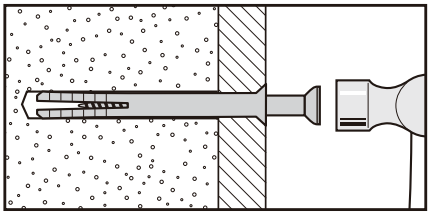

For use with walls stuck with plasterboard. The hammer fixing allows it to be fixed to the wall rather than the plasterboard. Always check the fixing is secure to the retaining wall.

No. 2 “Plasterboard” wall plug

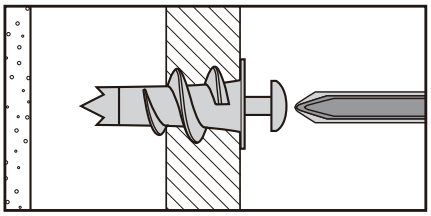

For use when attaching light loads onto plasterboard partitions.

No. 4 “Cavity Fixing - Heavy Duty” wall plug

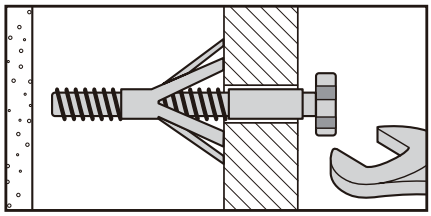

For use when fitting or supporting heavy loads such as shelving, wall cabinets and coat racks.

No. 6 “Shield Anchor” wall plug - heavy loads

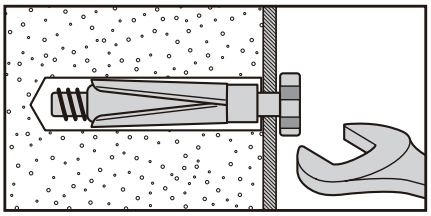

For use with heavier loads such as TV and HiFi speakers and satelite dishes etc.

Care & Maintenance

Safety: Always check the fitting and location to ensure your safety in and around the home.

Fitting: From time to time check the fitting to ensure the wall plugs or screws do not become loose.