CEILING FAN WITH LIGHT

INSTALLATION AND OPERATING INSTRUCTIONS

USER INSTALLATION MANUAL

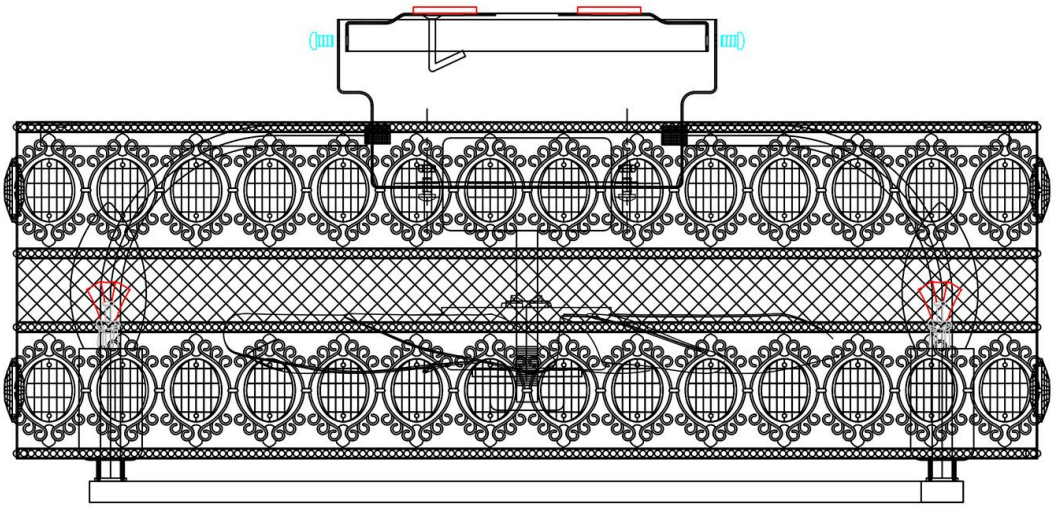

WARNING:

Turn off the electricity at the main fuse box or circuit panel.

THANK YOU FOR YOUR PURCHASE

Thank you for purchasing this quality product. To ensure correct function and safety, please read and save all instructions before using the product.

PARTS & ACCESSORIES

Ceiling Fan Kit:

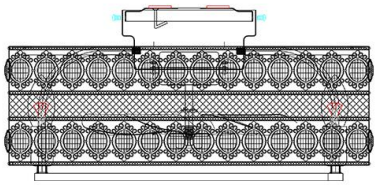

Fan body *1

Remote Control Kit:

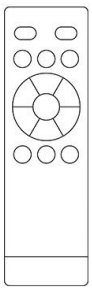

Remote control *1

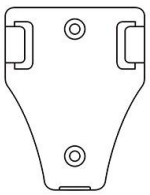

Wall bracket*1

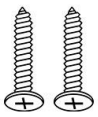

Self-tapping screws *2

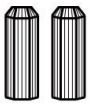

Plastic anchor *2

Installation Kit:

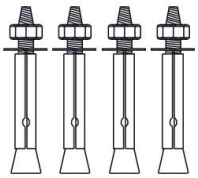

Expansion Bolts *4

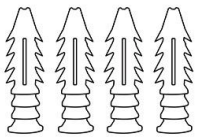

Plastic anchor *4

Self-tapping screws *4

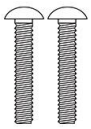

Screws *2

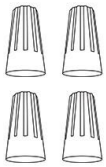

Wiring cap *4

Gloves *2

SAFETY TIPS BEFORE INSTALL

1. To avoid possible electric shock, turn off the electricity at the main fuse box or circuit panel before you begin the fan installation or before servicingthe fan or installing accessories.

2. Read all instructions and safety information carefully before installing your fan and save these instructions.

3. Make sure all electrical connections comply with local codes or ordinances and the National Electrical Code. If you are unfamiliar with electric wiring, please use a qualified and licensed electrician.

4. **WARNING**: The outlet box and ceiling support joist used must be securely mounted, and capable of supporting at least 100 pounds. To reduce the risk of fire, electric shock or personal injury, mount to the outlet box marked acceptable for fan supported and use mounting screws provided with the outlet box. The box must be supported directly by the building structure.

5. **WARNING**: To reduce the risk of fire, electric shock or personal injury, mount to outlet box marked "acceptable for fan support" and use mounting screws provided with the outlet box most outlet boxes commonly used for the support of lighting fixtures are not acceptable for fan support and may need to be replaced. Consult a qualified electrician if in doubt.

6. Switches must be UL. general use switches. Refer to the instructions packaged with the light kits and switches for proper assembly.

7. After installation is complete, check that all connections are absolutely secure.

8. After making electrical connections, spliced conductors should be turned upward and pushed carefully up into outlet box. The wires should be spread apart with the grounded conductor and the equipment-grounding conductor on one side of the outlet box.

9. **WARNING**: To reduce the risk of electrical shock and fire, do not use this fan with any solid-state fan speed control device, or rheostat.

10. Do not separate the reverse switch until the fan has come to a complete stop.

11. Do not insert anything into the fan blades while they are rotating.

12. **WARNING:** To reduce the risk of personal injury, do not bend the blade brackets (also referred to as "flanges") during assembly or after installation. Do not insert objects in the path of the blades.

13. To avoid personal injury or damage to the fan and other items, be cautious when working around or cleaning the fan.

14. Do not use water or detergent when cleaning the fan or fan blades. A dry dust cloth or lightly dampened cloth will be suitable for most cleaning.

NOTE: The important safety precautions and instructions appearing in the manual are not meant to cover all possible conditions and situations that may occur. It must be understood that common sense and caution are necessary factors in the installation and operation of this fan.

NOTE: This product is not intended for use by persons (including children) with reduced physical, sensory or mental capabilities are different or are impaired, or lack of experience or knowledge, unless such persons are supervised or trained to operate the appliance by a person responsible for their safety.

NOTE: Children should be supervised to ensure that they do not use appliances as a toy.

WARNING: To reduce the risk of personal injury, do not bend the blade brackets (also referred to asflanges) during assembly or after installation. Do notinsert objects in the path of the blades.

WARNING: Remove the rubber motor stops on the bottom of the fan before installing the blades or testing the motor.

WARNING: To reduce the risk of fire or electric shockthis fan is NOT suitable for use with solid-state speed controls.

WARNING: Electrical diagrams are for reference only.Optional use of any light kit shall be UL-listed andmarked suitable for use with this fan.

PRE-INSTALLATION

Tool preparation

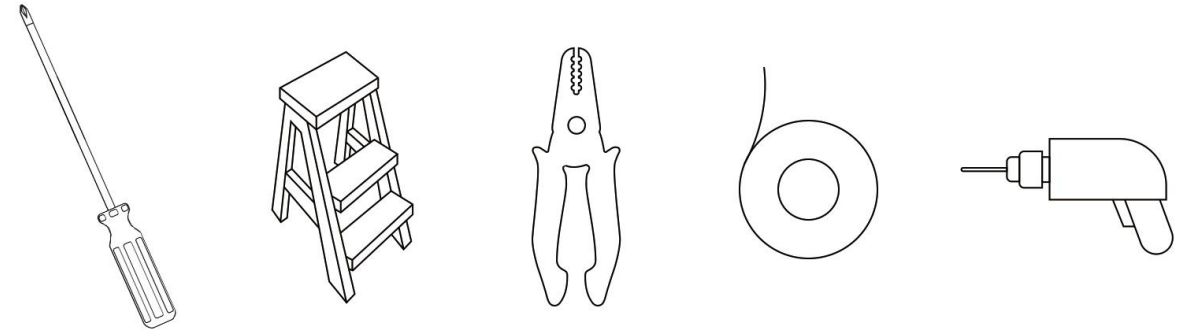

Phillips screwdriver (Longer than 8 inch) | Step ladder | Wire stripper | Electrical tape | Drill

Power off

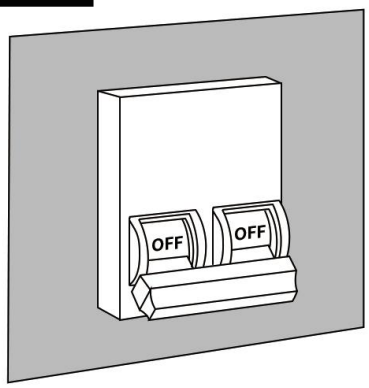

Before installation, the power must be turned off to prevent electric shock

REMOVING THE MOUNTING BRACKET

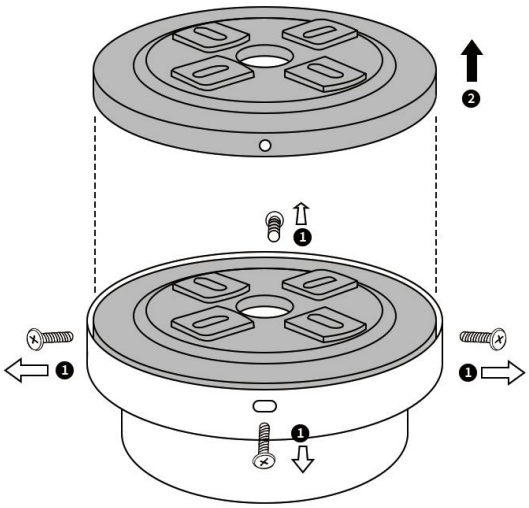

❶ **Unscrew the screws.**

❷ **Remove the mounting bracket**

IINSTALLATION OF DIFFERENT CEILINGS

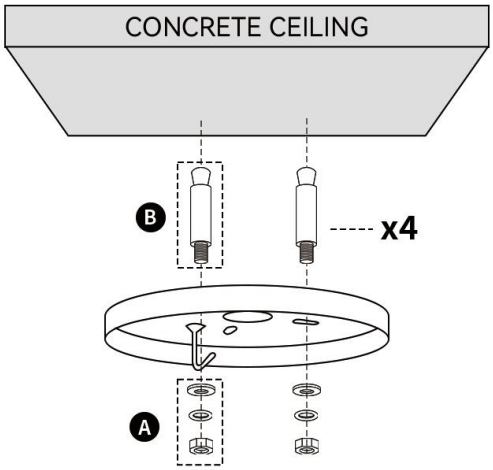

FOR CONCRETE CEILING

1. Marking screw holes in the ceiling
2. Punching holes in the ceiling with an electric drill
3. Remove Expansion Screws A and Install B in Ceiling
4. Install the mounting bracket and install the washers and screws A in sequence

IMPORTANT :
SCREWS & NUTS MUST BE TIGHTENED TILL SNUG

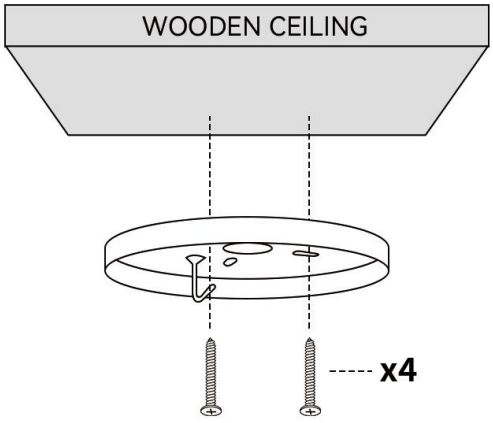

FOR WOODEN CEILING

1. Install the mounting bracket with self-tapping screws and electric

IMPORTANT :
SCREWS & NUTS MUST BE TIGHTENED TILL SNUG

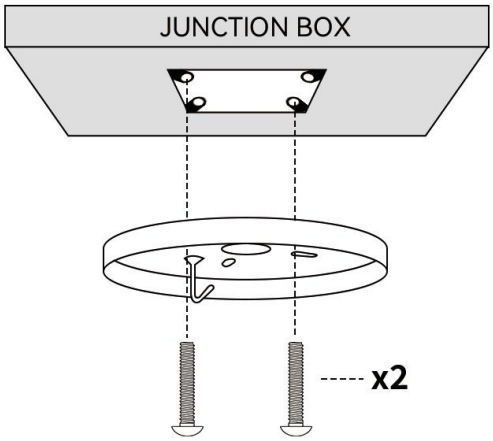

FOR JUNCTION BOX

1. Install the mounting bracket with screws

IMPORTANT :
SCREWS & NUTS MUST BE TIGHTENED TILL SNUG

INSTALLATION STEPS

PART 1 Fixed the ceiling fan

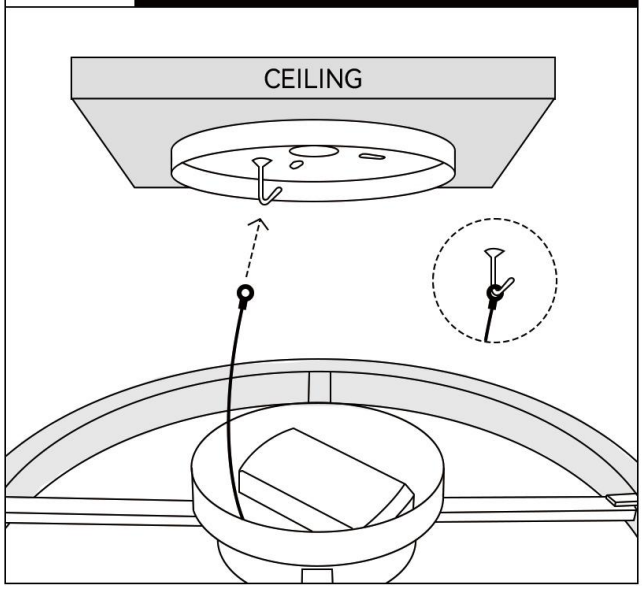

❶ Using the metal cord, hang the fan from the mounting bracket

PART 2 Connect the power wire

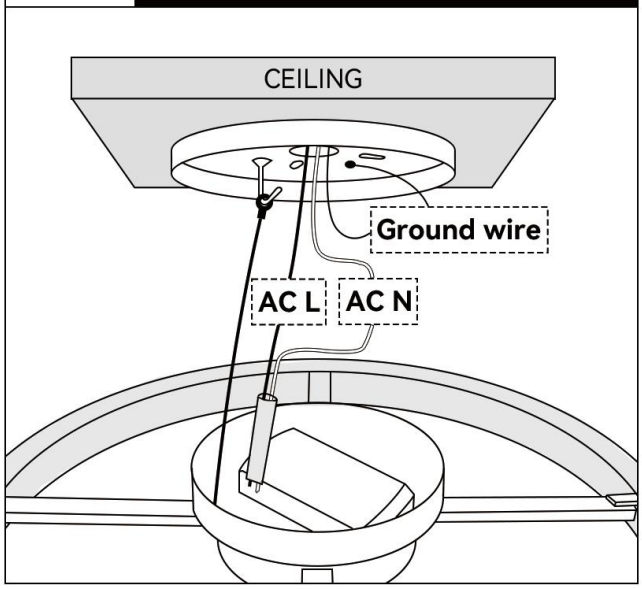

❶ Connect the power wire.
Black to AC L, White to ACN

❷ Connect the ground wire

PART 3 Mounting screw

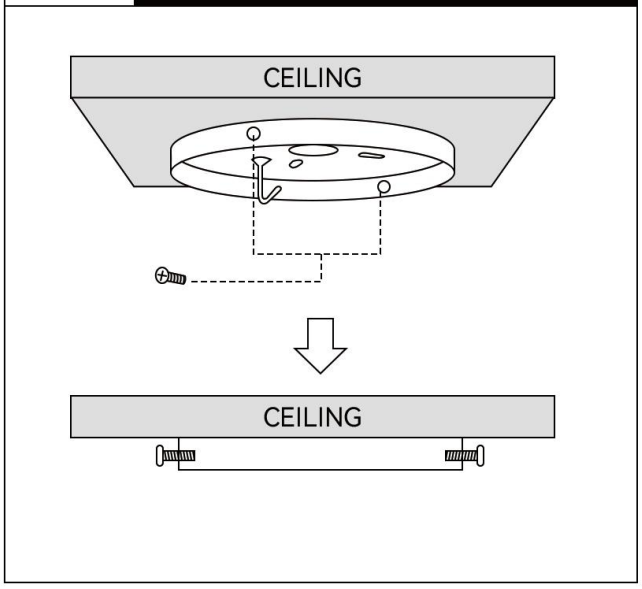

❶ Install two screws in the bracket, they should be 180° relative to each other

❷ Screw the 2 screws in halfway

PART 4 Install the ceiling fan

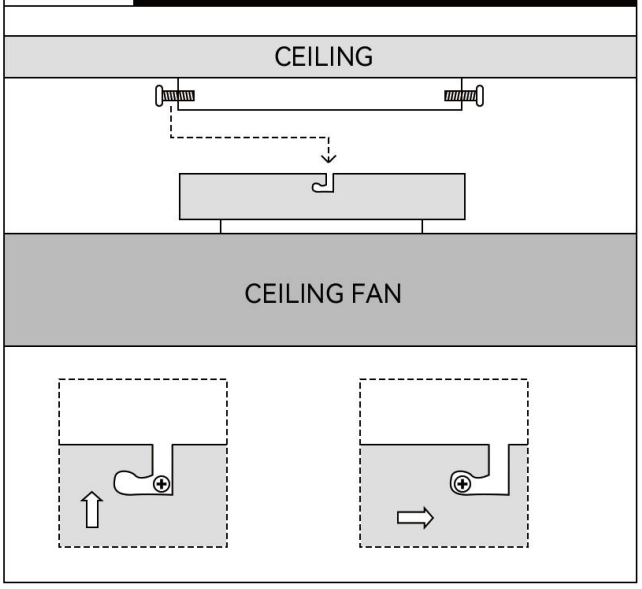

❶ Align the screw holes in the fan with the screws on the bracket

❷ Push the fan up to get the screws into the holes

❸ Rotate the fan clockwise to hold the fan in place

INSTALLATION INSTRUCTIONS

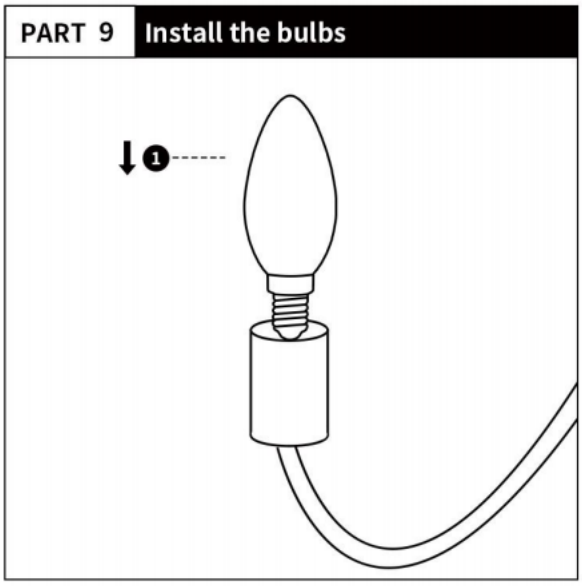

❶ Install the bulbs
(Light bulbs are not included in the product)

MAINTENANCE

Due to the fan's natural movement, connections may get loose after a period of usage. To ensure a proper and safety usage, inspect the suspension system and tighten all connections every 6 months.

CLEANING

Cleaning the fan periodically will prolong its useful life. Basic cleaning procedures are as follows:

1. Please shut off the power before you clean the light fan and replace the bulbs.
2. The bulbs and nearby parts will be still hot after the power is shut off. To avoid burned, please clean them after they are cooled down.
3. Don't use sandpaper, wire brush and other sharp tools to clean the fan light.
4. Don't clean the fan light by using detergents, acid or alkaline solvents.
5. Use only soft or lint-free cloth to clean the fan light.
6. Please dry the ceiling fan by cold-blast air after cleaning, in order to prevent dangerous leakage caused by water infiltrated into electriferous parts of the fan light or prevent rust of wet metal parts.
7. There is no need to oil the fan.

TROUBLE SHOOTING

Problem	Solution
• **The fan can not start.**	• Check the main and branch circuit fuses or breakers. • Check the line wire connections to the fan and switch wire connections in the switch housing.
• **The remote control doesn' t work.** (For safety clearance, we didn' t provide the batteries for the remote control.)	• Re-pairing the remote and controller ①Turn off the fan power or room power, then turn on again. ②After the buzzer sounds, press 2 Speed and 2 Hour, then the fan starts to turn. ③Solved! • Replace the remote and controller If the previous step is not effective, please contact us. We will help to send you the replacement part.
• **The fan is noisy.**	• Ensure all motor housing screws are installing snugly. • Ensure all the screws that attach the fan blade bracket to the motor hub are tight. • Ensure the wire nut connections are not ratting against each other or the interior wall of the switch housing. • Allow a 24-hour "breaking in" period. Most noises associated with a new fan disappear during this time. • If you are using the Ceiling Fan light kit,ensure the screws securing the glassware are tight. Check that the light bulbs are also secure. • Ensure the canopy is a short distance from the ceiling. It should not touch the ceiling.
• **Missing Accessories** • **Missing Mounting Hardware** • **Damaged Outer Packaging Box**	• Please contact with our service team, we will always 24/7 here for you. Just explain the situation you meet, provide problem photos. We will serve you wholeheartedly and send you the missing part replacement for free.
• **If you meet such fan and light functions cannot realize as we describe in the link**	• Please check all the connections are right, if you can't tell what went wrong, please contact us and we'll help you solve it.