ASSEMBLY INSTRUCTIONS

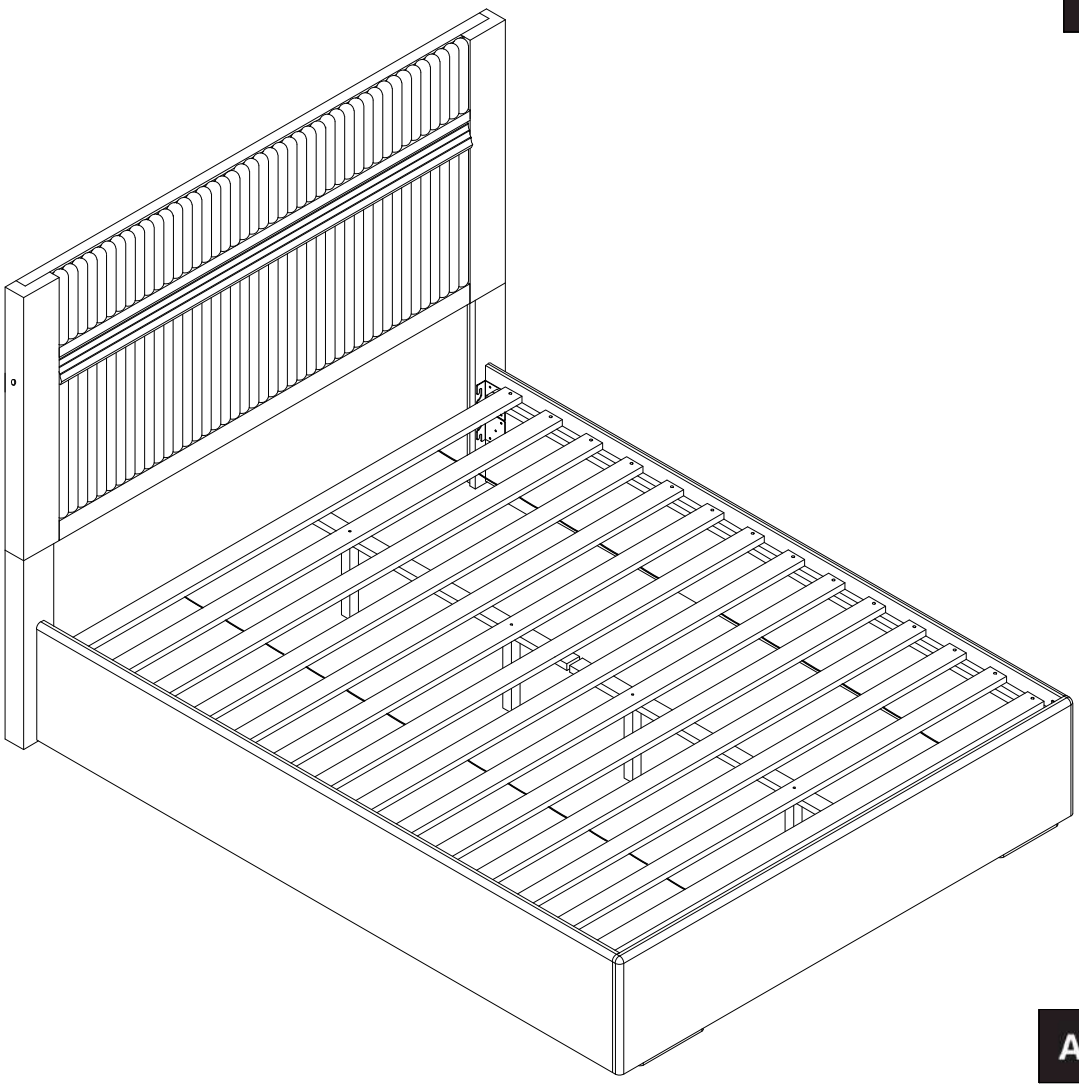

TOOLS REQUIRED

Screwdriver
(Not included)

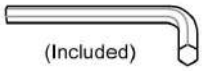

Allen Wrench

2 - People

ASSEMBLY RATING

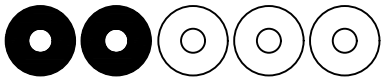

EASY ——► DIFFICULT

The Assembly Rating is a 5-point system showing the level of effort needed to assemble a specific product.

CHECK BEFORE STARTING

- [ ] **Are you missing anything?**

  Double-check all parts, hardware and accessories listed are all acccounted for.

- [ ] **Should we send any replacements?**

  Are there any irregularities or flaws in the parts? We can send replacements!

- [ ] **Check out our Quick Tips!**

  We recommend reviewing the pre-assembly handouts. Even experts need a refresher now and then!

- [ ] **Prep Time!**

  Please review the assembly instructions and all diagrams prior to assembling.

PRE ASSEMBLY INTRODUCTION

We understand building ready-to-assemble furniture can be a challenging experience for some. To help avoid confusion, we have provided some helpful tips that may speed up the process.

Teamwork

ALWAYS have at least two people to help with transporting and assembling the product to avoid potential injury and/or damage.

Suitable Location

Assembling near the area of the intended location is highly recommended.

Sufficient Space

Make sure you have enough space to move around during the assembly.

Avoid Scratches

Use cardboard, blankets or a carpeted area while assembling furniture to prevent scratches and damages.

Flat Surface

Make sure the furniture rests on a flat and level surface with each leg evenly touching the floor.

ASSEMBLY AND CARE ADVICE

FAILURE TO FOLLOW THE GUIDELINES BELOW MAY RESULT IN INJURY AND/OR PROPERTY DAMAGE.

Position each part correctly and insert screws or bolts into their respective holes.

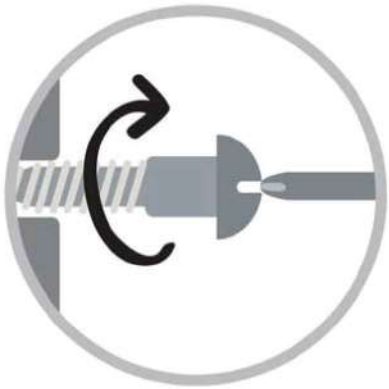

Turn clockwise to tighten and only tighten when step is completed or when instructed to do so.

Use the appropriate hand tools or power tools for assembly. Select steps, such as tightening screws and/or bolts, may require hand tools to avoid causing damage during assembly.

Save the instructions and store any supplied tools for later maintenance.

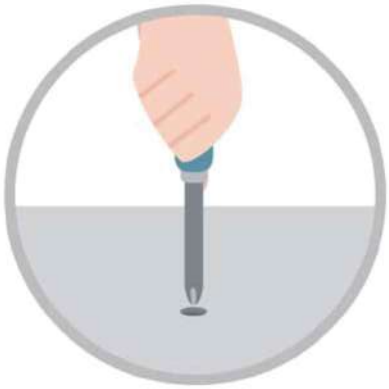

After two weeks, check and tighten any loose hardware and repeat again every six months thereafter.

IT IS THE USER'S RESPONSIBILITY TO MAINTAIN THE FURNITURE. THE HARDWARE MAY LOOSEN OVER TIME AND MAY CAUSE THE FURNITURE TO BE WOBBLY AND UNABLE TO SUPPORT ITS INTENDED WEIGHT CAPACITY. THIS MAY LEAD TO COLLAPSE AND MAY CAUSE SERIOUS INJURY

QUEEN BED

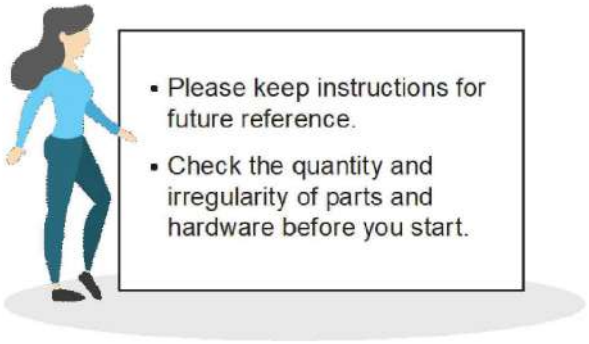

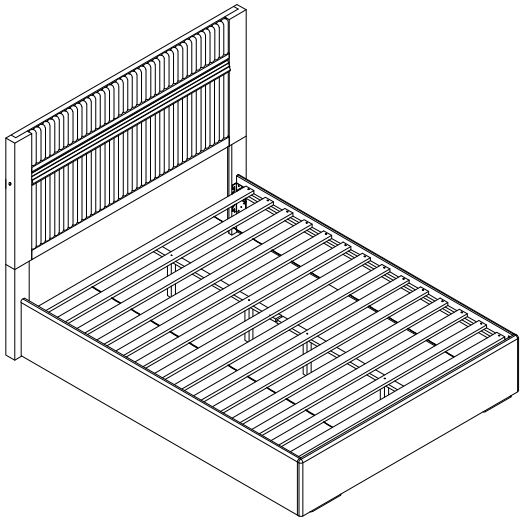

PARTS

1 1pc

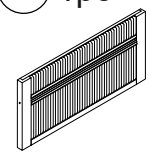

HEADBOARD

2 1pc

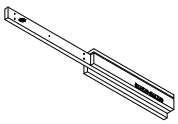

HEADBOARD POST (LEFT)

3 1pc

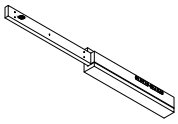

HEADBOARD POST (RIGHT)

4 2pcs

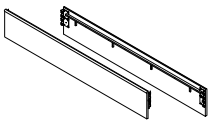

SIDE RAIL

5 1pc

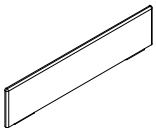

FOOTBOARD

6 2pcs

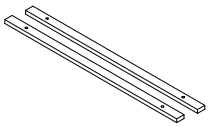

CENTER RAIL

7 4pcs

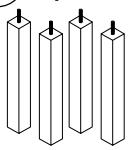

CENTER RAIL SUPPORTER

8 2set

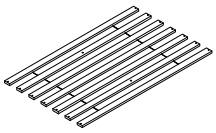

SLATS

HARDWARE

HARDWARE INSIDE HEADBOARD

A 10pcs

JCBC M6 X 35mm

B 10pcs

Lock Washer

C 10pcs

Flat Washer

D 1pc

Allen Key M4

E 1pc

Adaptor **12V-1A**

HARDWARE INSIDE FOOTBOARD SIDERAIL

F 28pcs

TRUSS HD C/B M4 X 25mm

G 1pc

Allen Key M5

packed in 2 cartons

Carton	Description	Part			Hardware
	HEADBOARD	1	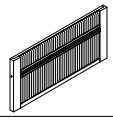	X1	A x10pcs B x10pcs C x10pcs D x1pc E x1pc
	HEADBOARD POST (LEFT)	2	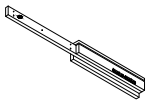	X1	
	HEADBOARD POST (RIGHT)	3	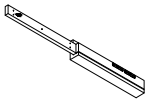	X1	
	SIDE RAIL	4	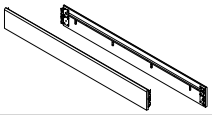	X2	F x28pcs G x1pc
	FOOTBOARD	5	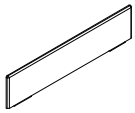	X1	
	CENTER RAIL	6	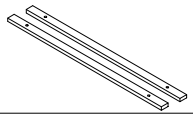	X2	
	CENTER RAIL SUPPORTER	7	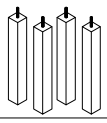	X4	
	SLATS	8	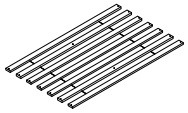	X2	

ASSEMBLY INSTRUCTIONS

1

Part ① x1pc
Part ② x1pc
Part ③ x1pc

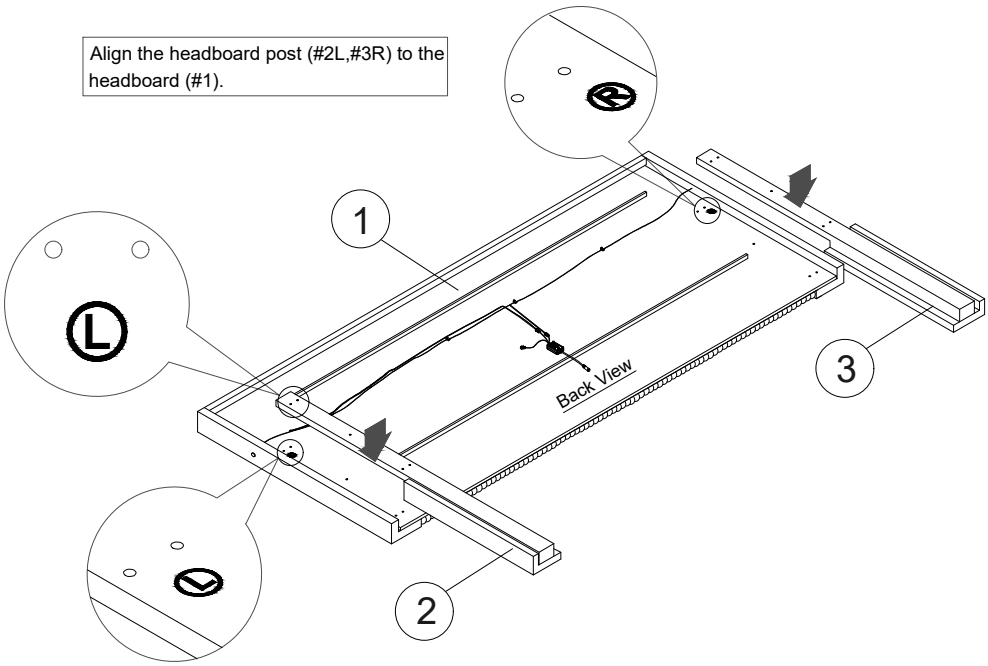

2

Part ① x1pc
Part ② x1pc
Part ③ x1pc
Hardware Ⓐ x10pcs
Hardware Ⓑ x10pcs
Hardware Ⓒ x10pcs
Hardware Ⓓ x1pc

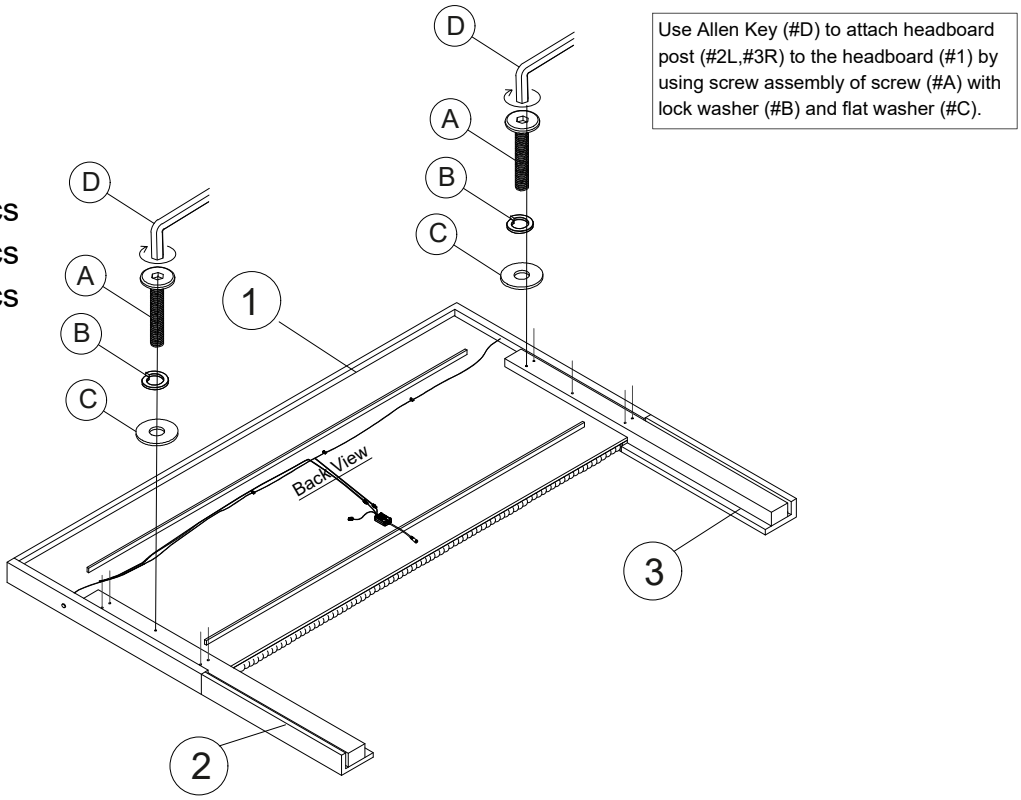

ASSEMBLY INSTRUCTIONS

3

Part ① x1pc
Part ④ x2pcs
Part ⑤ x1pc
Hardware Ⓖ x1pc

Please hook screw plate attached on the side rail (#4) onto the Truss screws and use allen key (#G) to tighten the Truss screws and secure the side rail (#4) to the headboard post (#2L,#3R) and Footboard (#5).

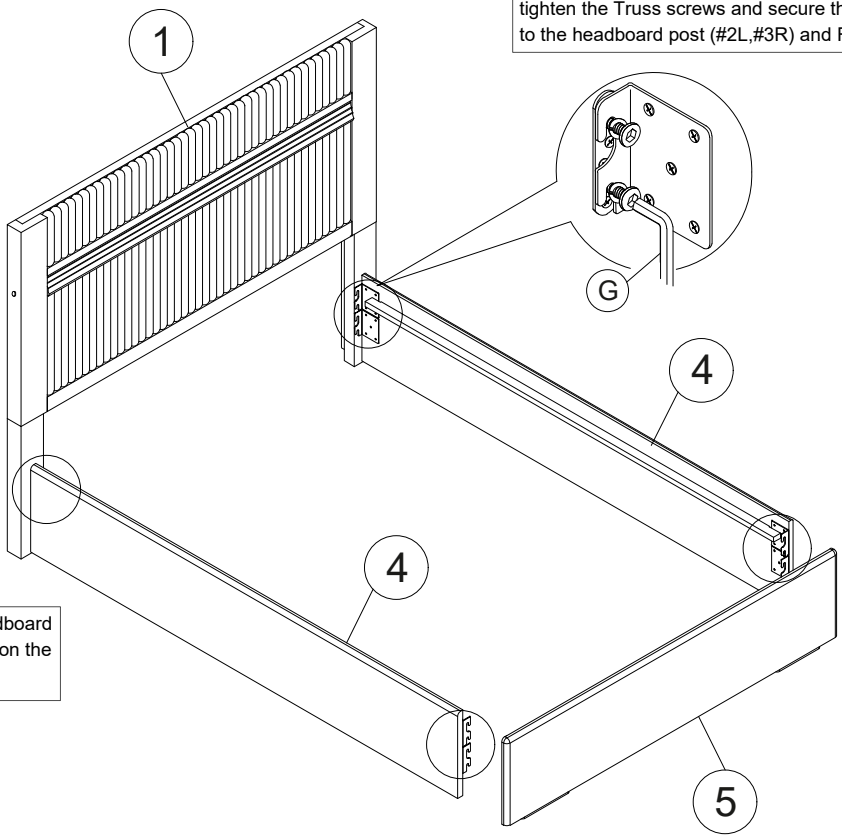

Please loosen the Truss screws on the headboard post (#2L,#3R) as well as the Truss screws on the footboard panel (#5).

4

Part ⑥ x2pcs
Part ⑦ x4pcs
Part ⑧ x2sets

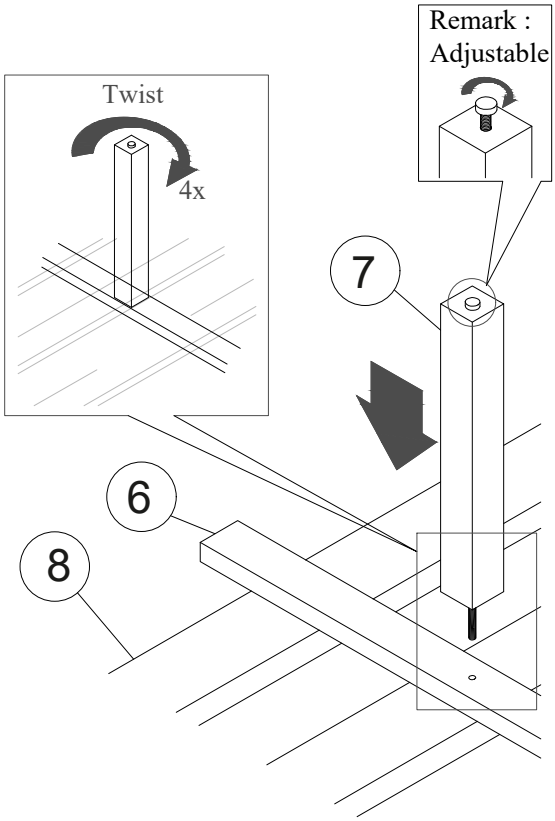

Align the center rail (#6) on the slats (#8) and secure together by twisting the center rail supporter (#7) until tight.

ASSEMBLY INSTRUCTIONS

5

Part ⑧ x2set
Hardware Ⓕ x28pcs

Extend the slats (#8) over the siderail (#4) and secure by using Screw (#F) with screwdriver (not included).

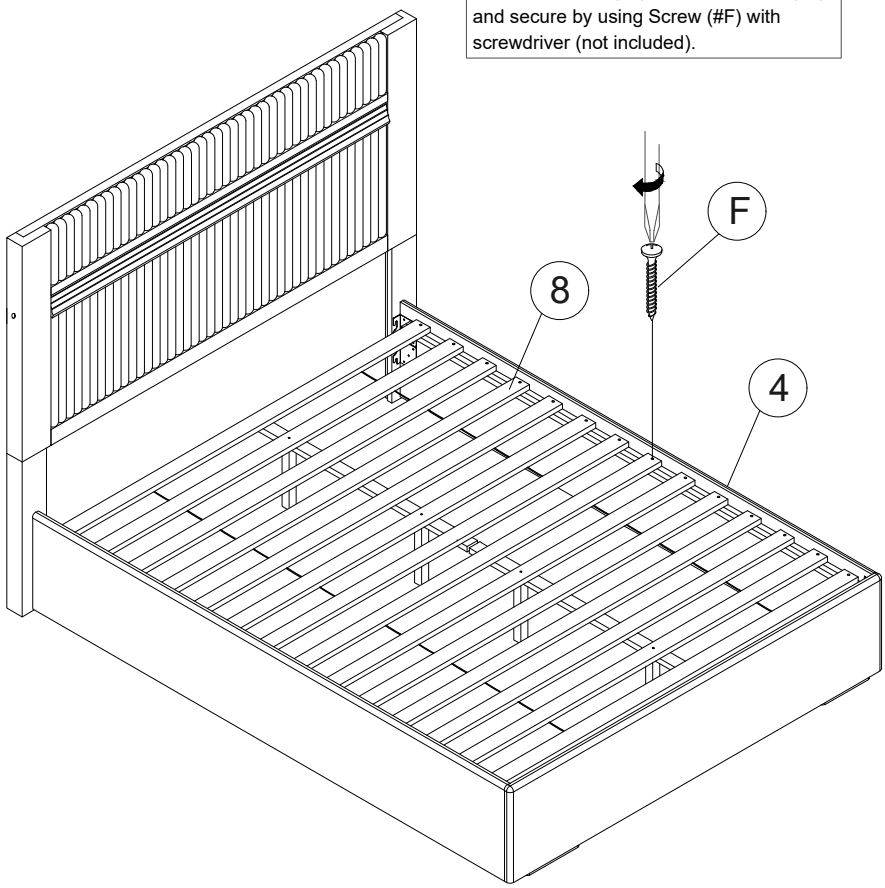

6

Hardware Ⓔ x1pc

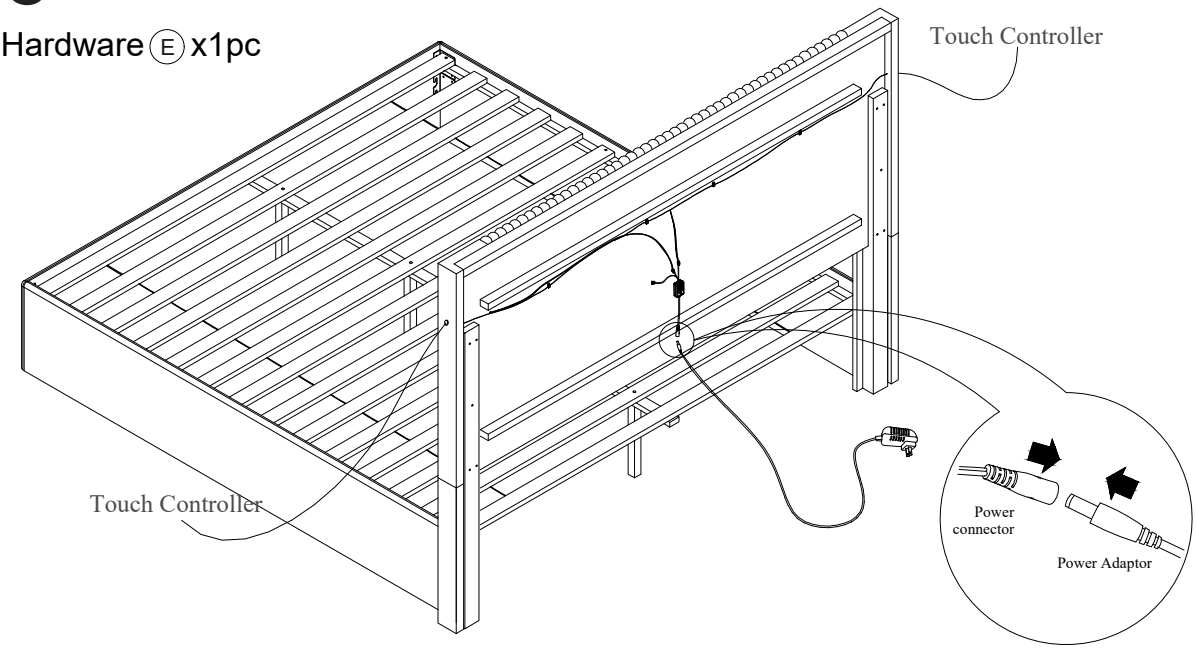

Connect the attached power connector on the headboard to the power adaptor (#E).

ASSEMBLY INSTRUCTIONS

7

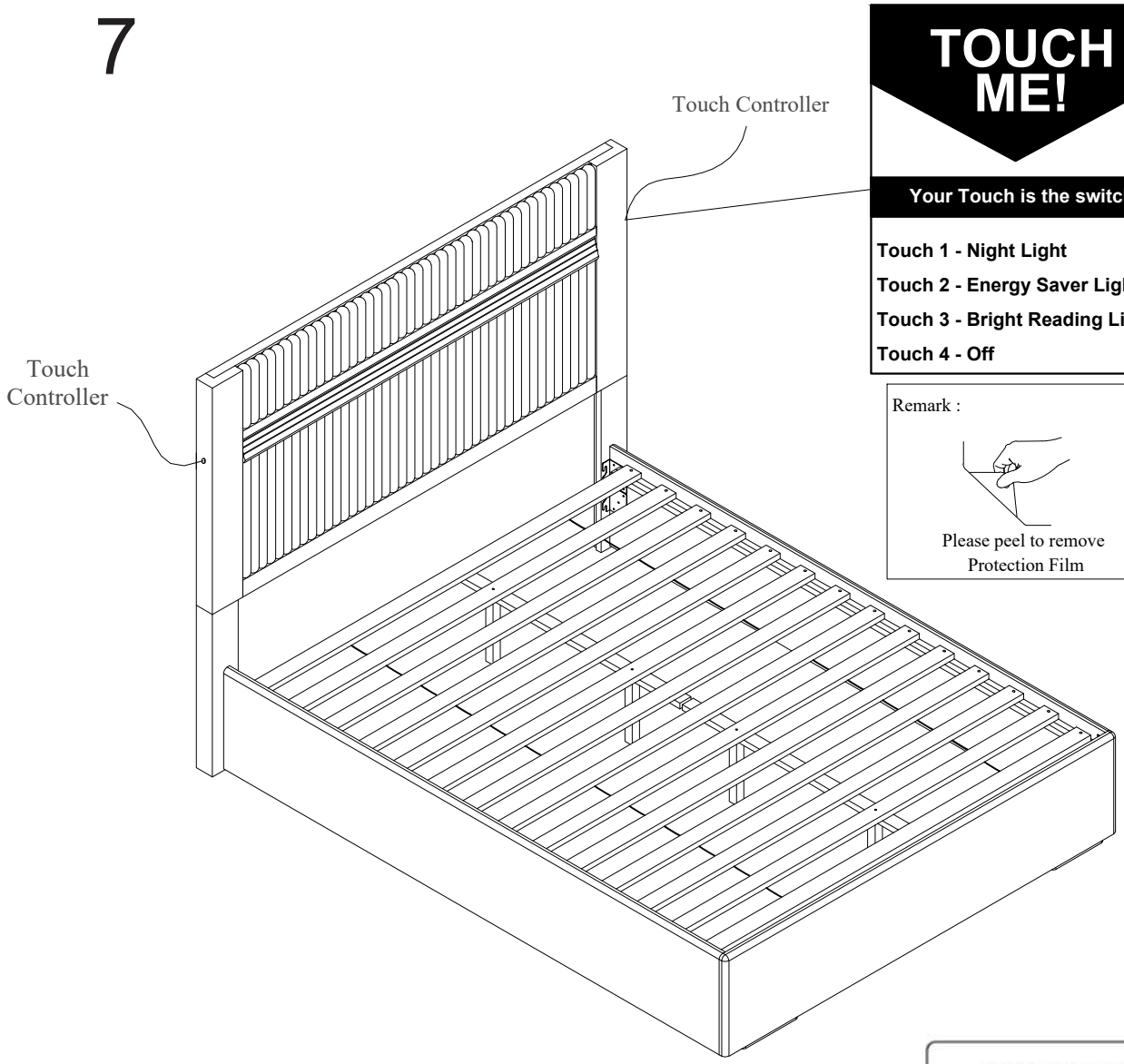

TOUCH ME!

Your Touch is the switch

Touch 1 - Night Light
Touch 2 - Energy Saver Light
Touch 3 - Bright Reading Light
Touch 4 - Off

Remark :

Please peel to remove Protection Film

ASSEMBLY COMPLETED

Please ensure the furniture rests on an even and flat surface. If the product wobbles or feels loose, double-check all bolts and/or screws are properly tightened and secured.

Keep this handy!

Please retain this instruction manual and any order-related information for future reference.

Lift, don't drag!

To avoid damage to product please always LIFT the product when transporting of adjusting the placement.

This product is intended for RESIDENTIAL USE ONLY and not for commercial use.

ASSEMBLY INSTRUCTIONS

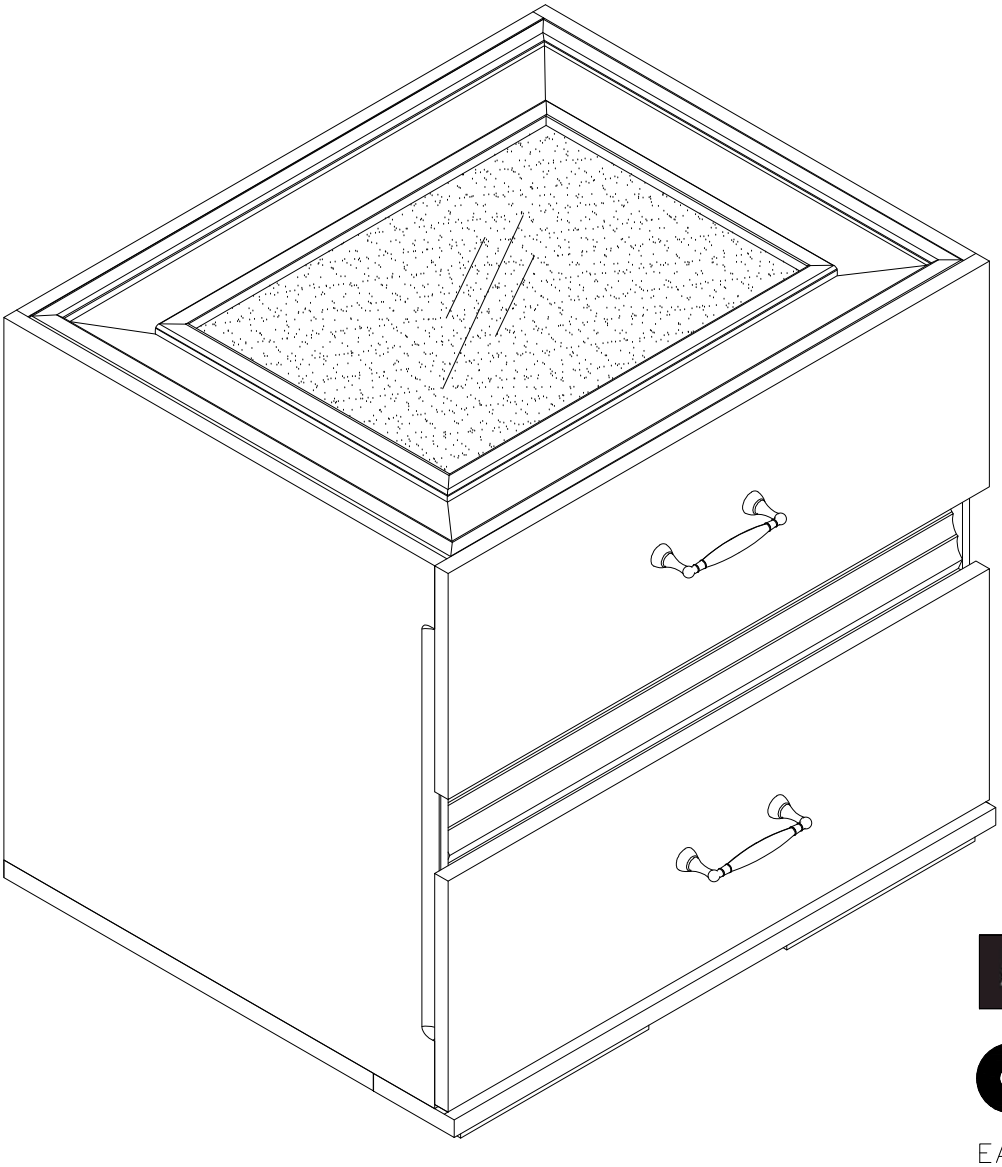

TOOLS REQUIRED

Screwdriver
(Not included)

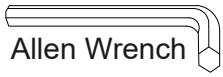

Allen Wrench
(Not included)

2 - People

ASSEMBLY RATING

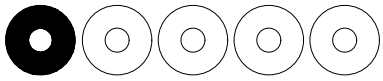

EASY ——► DIFFICULT

The Assembly Rating is a 5-point system showing the level of effort needed to assemble a specific product.

CHECK BEFORE STARTING

- [ ] **Are you missing anything?**

  Double-check all parts, hardware and accessories listed are all acccounted for.

- [ ] **Should we send any replacements?**

  Are there any irregularities or flaws in the parts? We can send replacements!

- [ ] **Check out our Quick Tips!**

  We recommend reviewing the pre-assembly handouts. Even experts need a refresher now and then!

- [ ] **Prep Time!**

  Please review the assembly instructions and all diagrams prior to assembling.

PRE ASSEMBLY INTRODUCTION

We understand building ready-to-assemble furniture can be a challenging experience for some. To help avoid confusion, we have provided some helpful tips that may speed up the process.

Teamwork

ALWAYS have at least two people to help with transporting and assembling the product to avoid potential injury and/or damage.

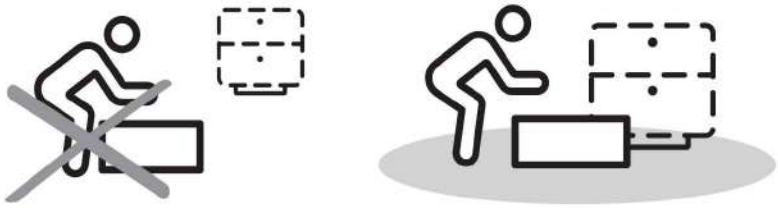

Suitable Location

Assembling near the area of the intended location is highly recommended.

Sufficient Space

Make sure you have enough space to move around during the assembly.

Avoid Scratches

Use cardboard, blankets or a carpeted area while assembling furniture to prevent to prevent scratches and damages.

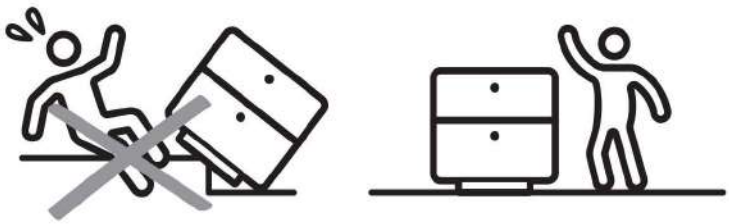

Flat Surface

Make sure the furniture rests on a flat and level surface with each leg evenly touching the floor.

ASSEMBLY AND CARE ADVICE

FAILURE TO FOLLOW THE GUIDELINES BELOW MAY RESULT IN INJURY AND/OR PROPERTY DAMAGE.

Position each part correctly and insert screws or bolts into their respective holes.

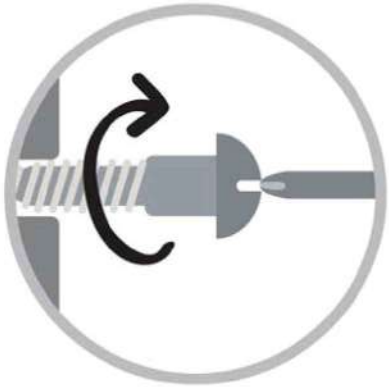

Turn clockwise to tighten and only tighten when step is completed or when instructed to do so.

Use the appropriate hand tools or power tools for assembly. Select steps, such as tightening screws and/or bolts, may require hand tools to avoid causing damage during assembly.

Save the instructions and store any supplied tools for later maintenance.

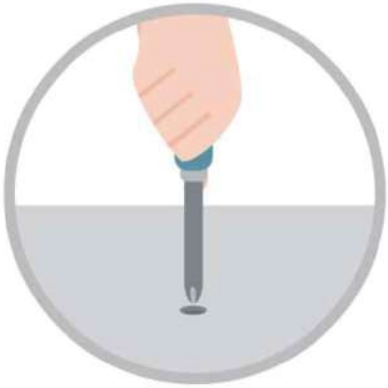

After two weeks, check and tighten any loose hardware and repeat again every six months thereafter.

IT IS THE USER'S RESPONSIBILITY TO MAINTAIN THE FURNITURE. THE HARDWARE MAY LOOSEN OVER TIME AND MAY CAUSE THE FURNITURE TO BE WOBBLY AND UNABLE TO SUPPORT ITS INTENDED WEIGHT CAPACITY. THIS MAY LEAD TO COLLAPSE AND MAY CAUSE SERIOUS INJURY

NIGHTSTAND

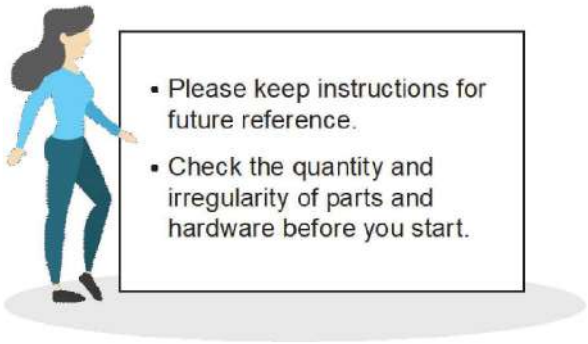

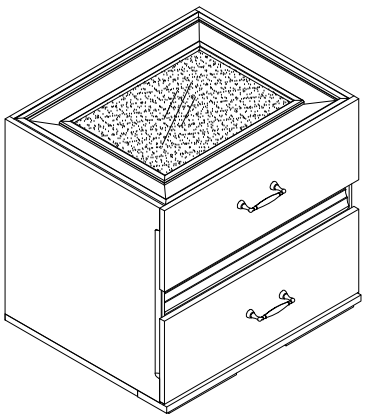

PARTS

(1) 1pc

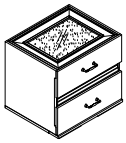

NIGHTSTAND

(2) 1pc

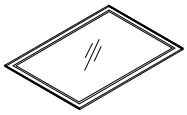

GLASS TOP

HARDWARE

HARDWARE INSIDE NIGHTSTAND

(A) 1pc

Adaptor **12V-2A**

ASSEMBLY INSTRUCTIONS

1

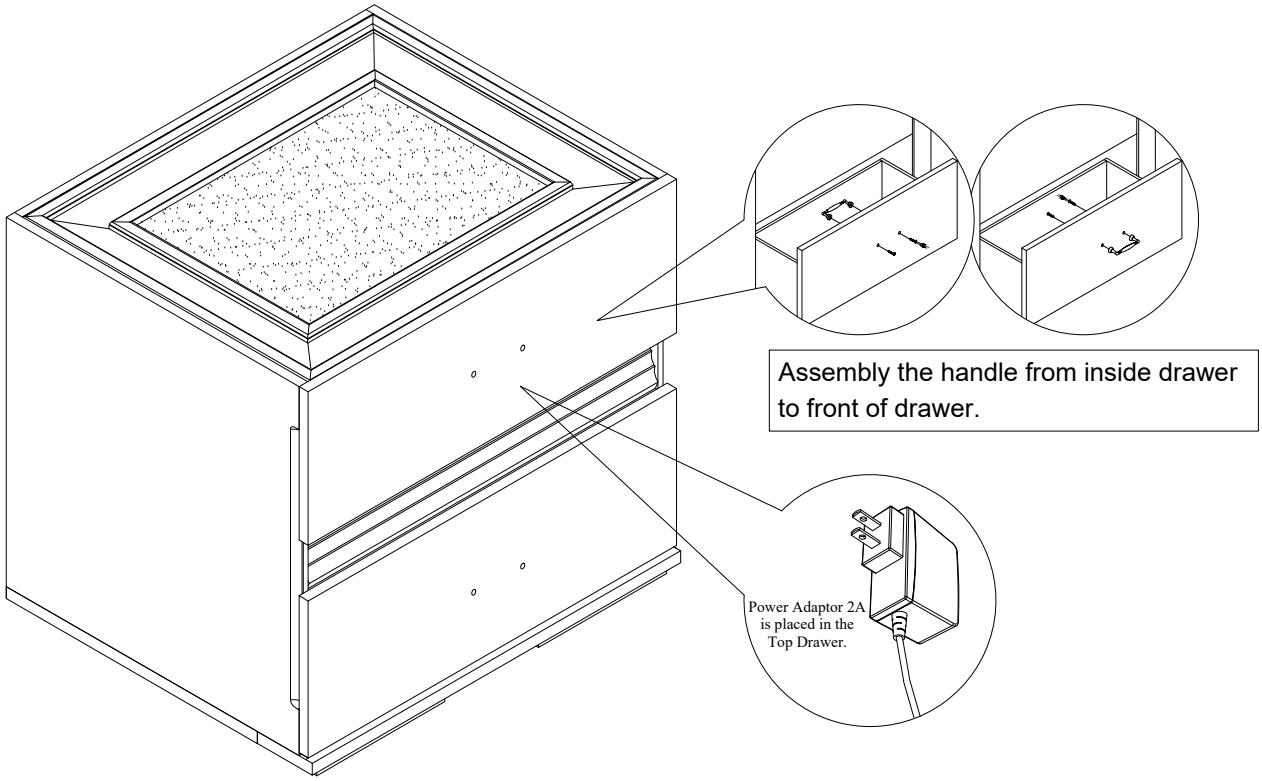

2

Hardware Ⓐ x1pc

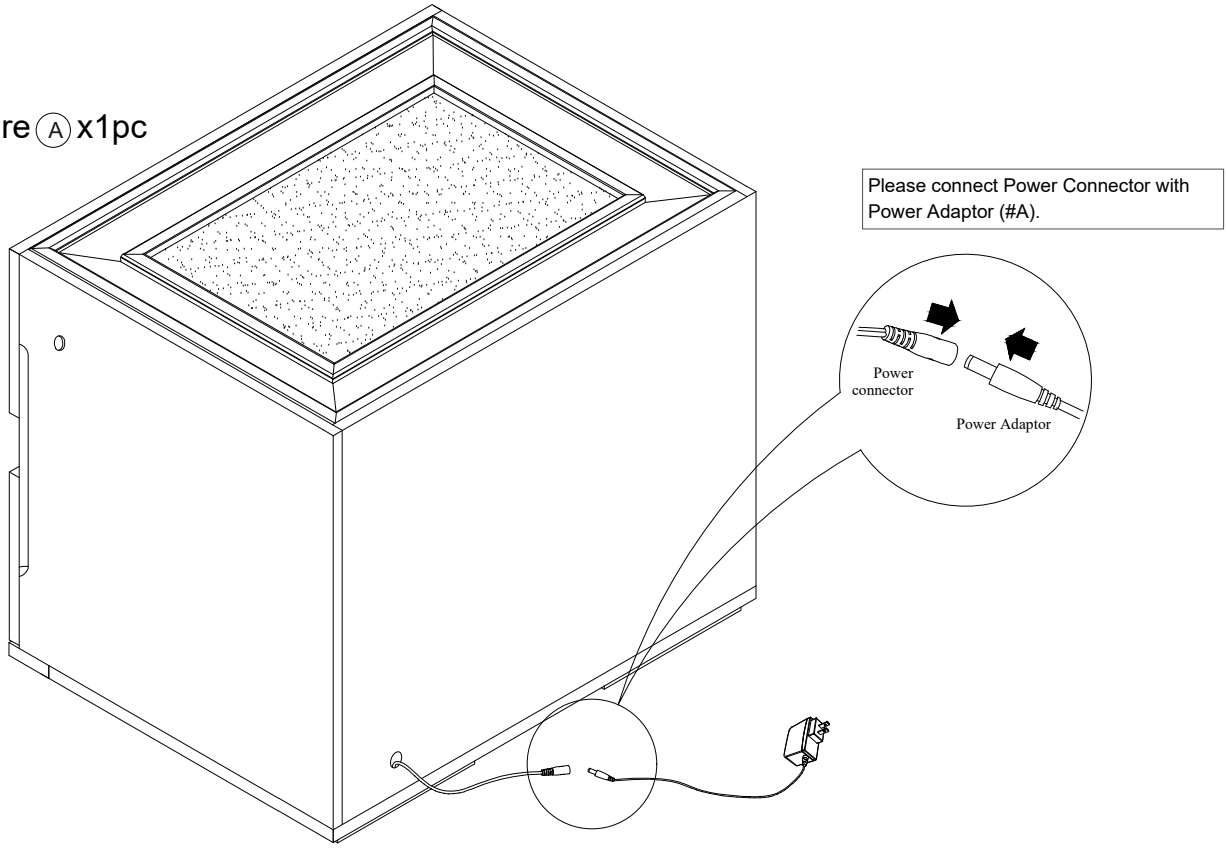

ASSEMBLY INSTRUCTIONS

3

Part ② x1pc

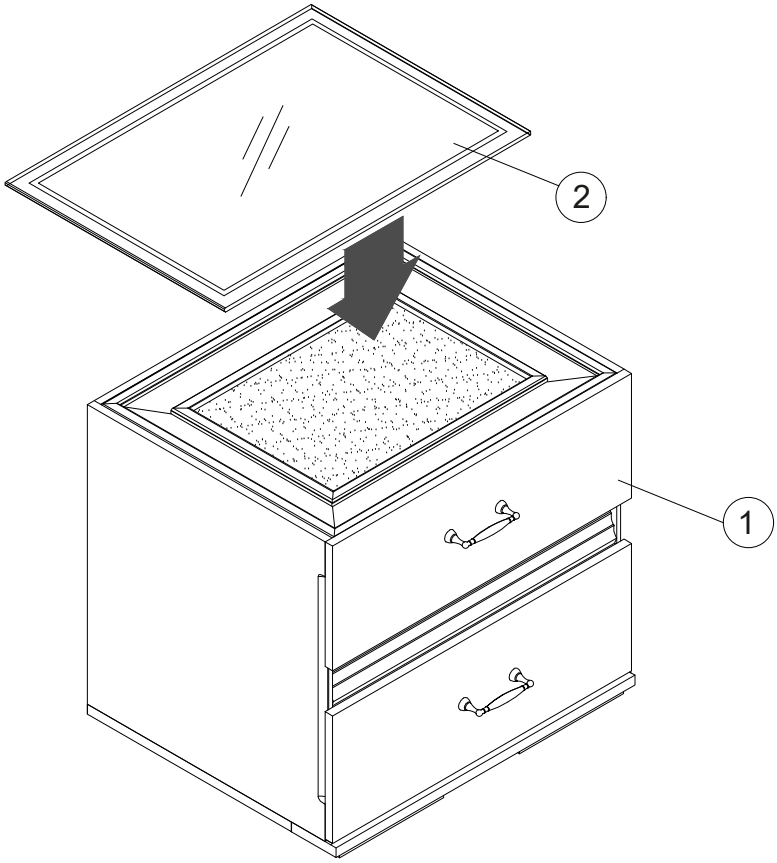

4

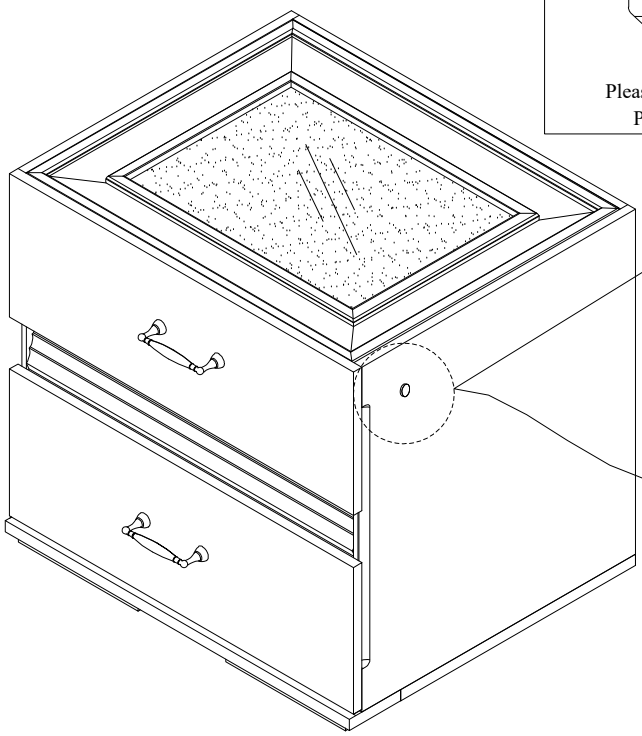

Remark :

Please peel to remove
Protection Film

TOUCH ME!

Your Touch is the switch

Touch 1 - Night Light
Touch 2 - Energy Saver Light
Touch 3 - Bright Reading Light
Touch 4 - Off

ASSEMBLY COMPLETED

Please ensure the furniture rests on an even and flat surface. If the product wobbles or feels loose, double-check all bolts and/or screws are properly tightened and secured.

Keep this handy!

Please retain this instruction manual and any order-related information for future reference.

Lift, don't drag!

To avoid damage to product please always LIFT the product when transporting of adjusting the placement.

This product is intended for RESIDENTIAL USE ONLY and not for commercial use.

ASSEMBLY INSTRUCTIONS

TOOLS REQUIRED

Screwdriver
(Not included)

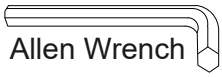

Allen Wrench
(Not included)

2 - People

ASSEMBLY RATING

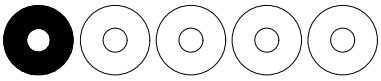

EASY ——► DIFFICULT

The Assembly Rating is a 5-point system showing the level of effort needed to assemble a specific product.

CHECK BEFORE STARTING

- [ ] **Are you missing anything?**

  Double-check all parts, hardware and accessories listed are all acccounted for.

- [ ] **Should we send any replacements?**

  Are there any irregularities or flaws in the parts? We can send replacements!

- [ ] **Check out our Quick Tips!**

  We recommend reviewing the pre-assembly handouts. Even experts need a refresher now and then!

- [ ] **Prep Time!**

  Please review the assembly instructions and all diagrams prior to assembling.

PRE ASSEMBLY INTRODUCTION

We understand building ready-to-assemble furniture can be a challenging experience for some. To help avoid confusion, we have provided some helpful tips that may speed up the process.

Teamwork

ALWAYS have at least two people to help with transporting and assembling the product to avoid potential injury and/or damage.

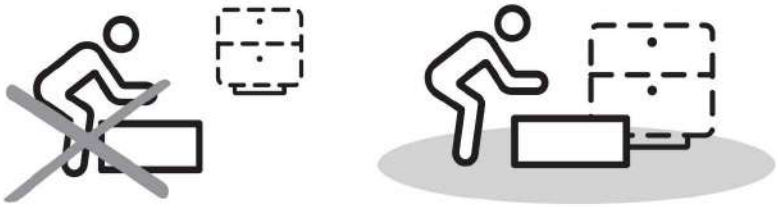

Suitable Location

Assembling near the area of the intended location is highly recommended.

Sufficient Space

Make sure you have enough space to move around during the assembly.

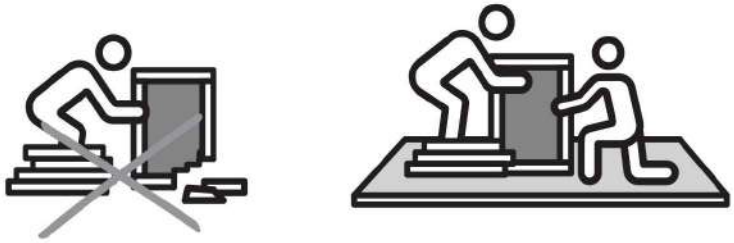

Avoid Scratches

Use cardboard, blankets or a carpeted area while assembling furniture to prevent to prevent scratches and damages.

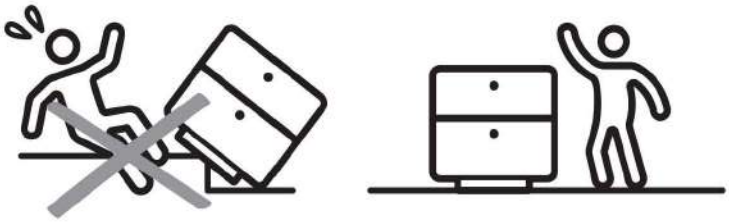

Flat Surface

Make sure the furniture rests on a flat and level surface with each leg evenly touching the floor.

ASSEMBLY AND CARE ADVICE

FAILURE TO FOLLOW THE GUIDELINES BELOW MAY RESULT IN INJURY AND/OR PROPERTY DAMAGE.

Position each part correctly and insert screws or bolts into their respective holes.

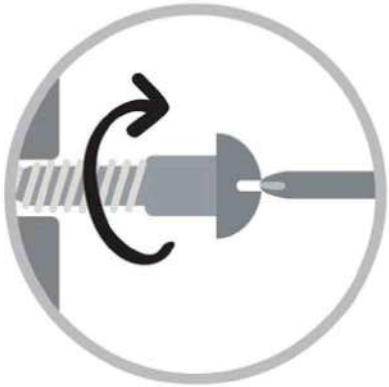

Turn clockwise to tighten and only tighten when step is completed or when instructed to do so.

Use the appropriate hand tools or power tools for assembly. Select steps, such as tightening screws and/or bolts, may require hand tools to avoid causing damage during assembly.

Save the instructions and store any supplied tools for later maintenance.

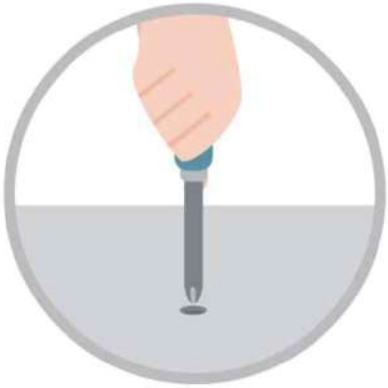

After two weeks, check and tighten any loose hardware and repeat again every six months thereafter.

IT IS THE USER'S RESPONSIBILITY TO MAINTAIN THE FURNITURE. THE HARDWARE MAY LOOSEN OVER TIME AND MAY CAUSE THE FURNITURE TO BE WOBBLY AND UNABLE TO SUPPORT ITS INTENDED WEIGHT CAPACITY. THIS MAY LEAD TO COLLAPSE AND MAY CAUSE SERIOUS INJURY

DRESSER

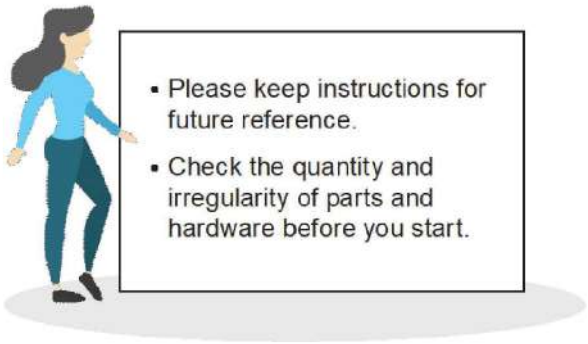

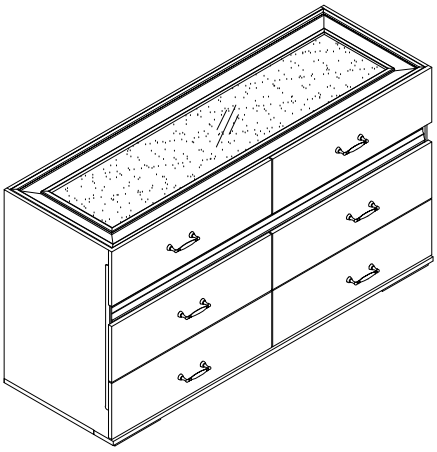

PARTS

1 1pc

DRESSER

2 1pc

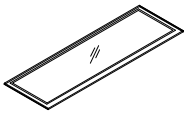

GLASS TOP

HARDWARE

HARDWARE INSIDE DRESSER

A 1pc

Anti-Tip Kit

B 1pc

Adaptor **12V-5A**

ASSEMBLY INSTRUCTIONS

1

Hardware Ⓐ x1pc

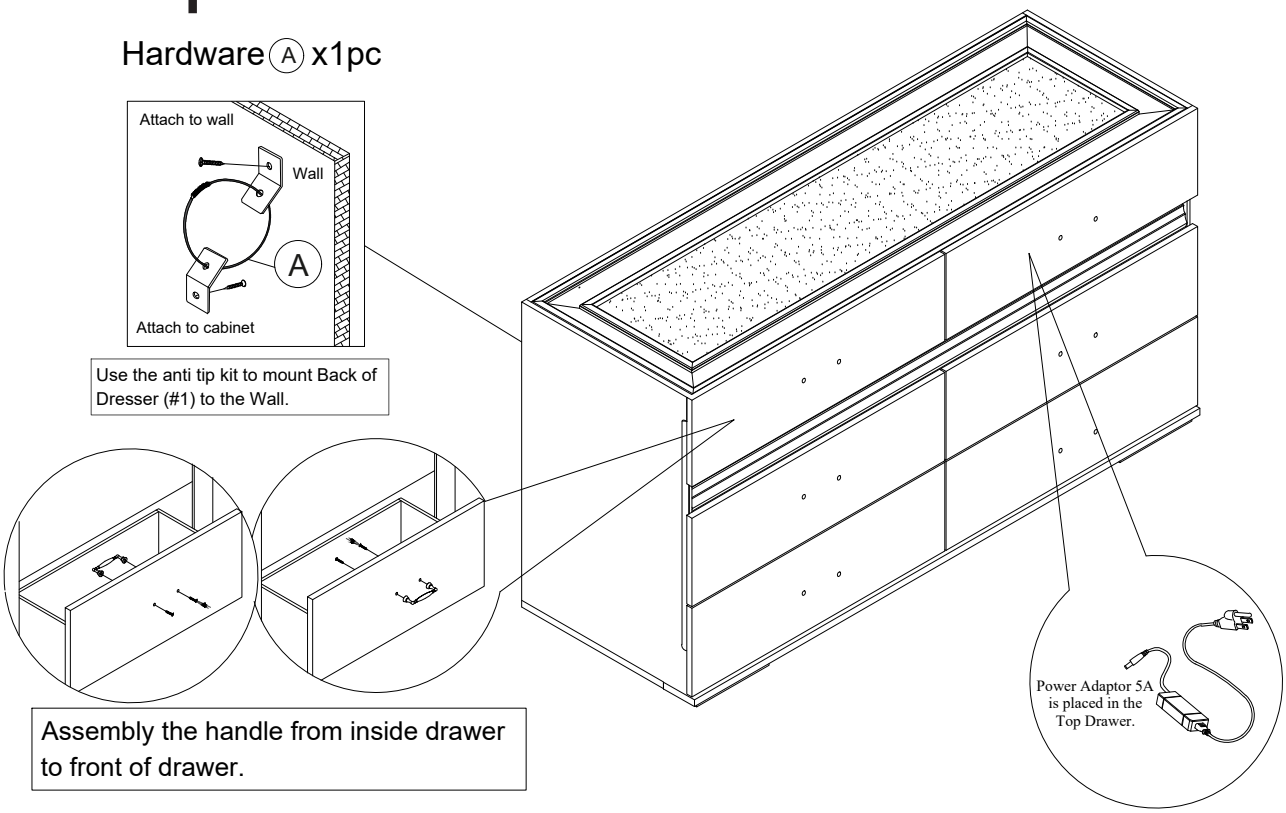

Use the anti tip kit to mount Back of Dresser (#1) to the Wall.

Assembly the handle from inside drawer to front of drawer.

2

Hardware Ⓑ x1pc

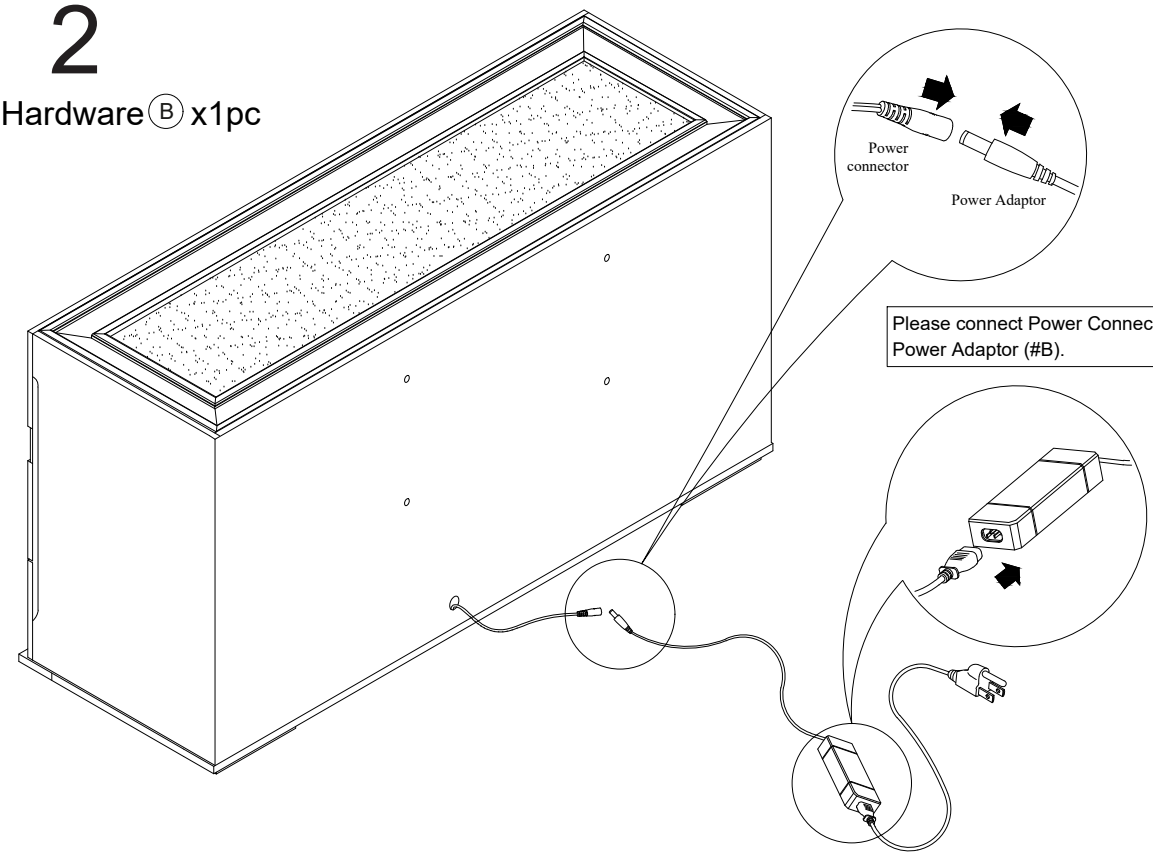

Please connect Power Connector with Power Adaptor (#B).

ASSEMBLY INSTRUCTIONS

3

Part ② x1pc

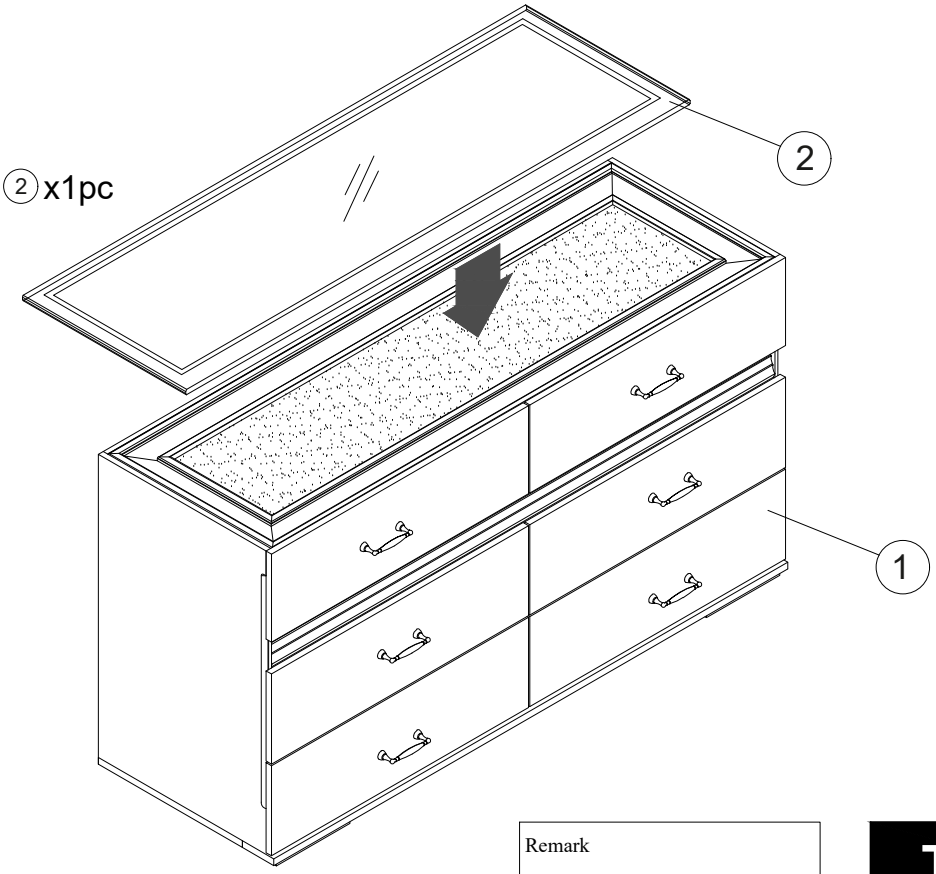

4

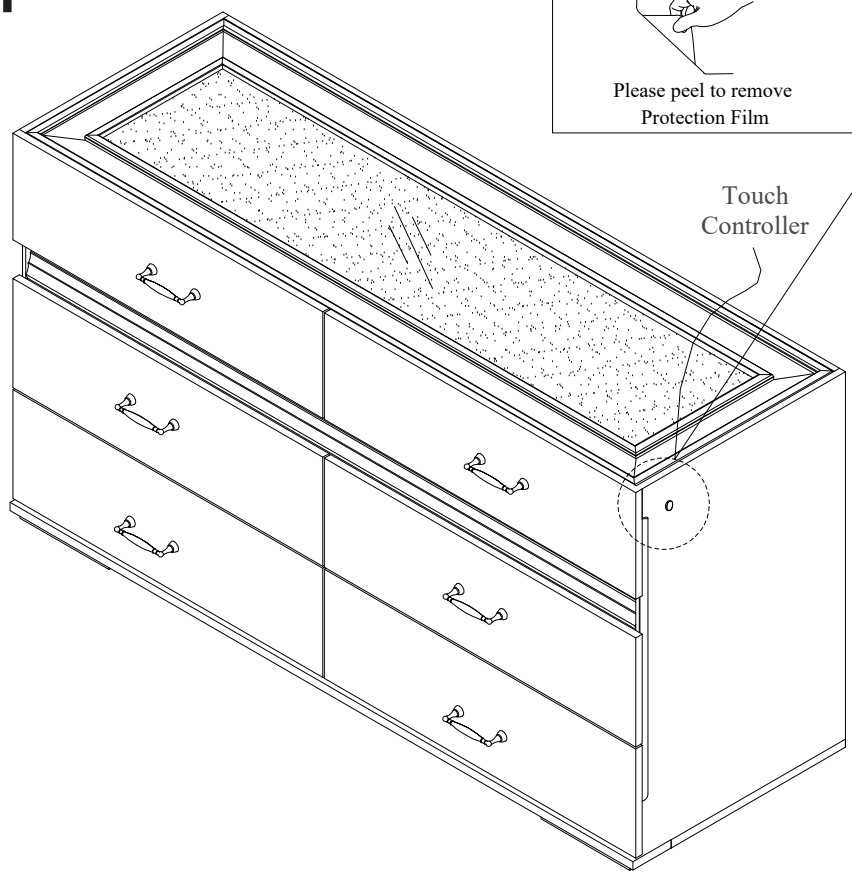

Remark

Please peel to remove
Protection Film

TOUCH ME!

Your Touch is the switch

Touch 1 - Night Light
Touch 2 - Energy Saver Light
Touch 3 - Bright Reading Light
Touch 4 - Off

ASSEMBLY COMPLETED

Please ensure the furniture rests on an even and flat surface. If the product wobbles or feels loose, double-check all bolts and/or screws are properly tightened and secured.

Keep this handy!

Please retain this instruction manual and any order-related information for future reference.

Lift, don't drag!

To avoid damage to product please always LIFT the product when transporting of adjusting the placement.

This product is intended for RESIDENTIAL USE ONLY and not for commercial use.

ASSEMBLY INSTRUCTIONS

Wall Mounting and Fixing

EXPANSION WALL ANCHOR

Our provided expansion wall anchors are only suitable for masonry walls, such as drywall, plaster or concrete, and are best for holding lightweight items or for anti-tip prevention. If you are unsure of the correct wall anchor to use with the product, please request professional guidance. liability for product damage or failure due to using the incorrect anchors will fall on the installer.

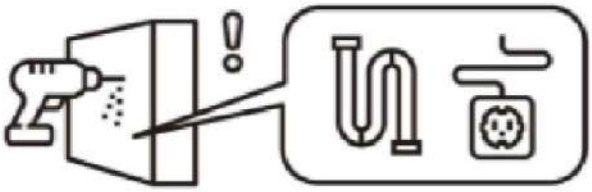

CHECK BEFORE PROCEEDING

Prior to drilling or hammering, please check for wires or pipes. We recommend using a stud finder to locate a stud, which will offer more appropriate resistance and hold more weight.

QUICK TIPS

1.If unsure of the proper size, always choose a larger screw and wall anchor.

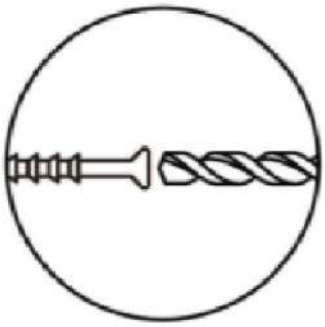

2. Match the drill bit to the wall anchor and hole size.

3. Only drill horizontally. Do not force the drill or enlarge the hole for the wall anchor.

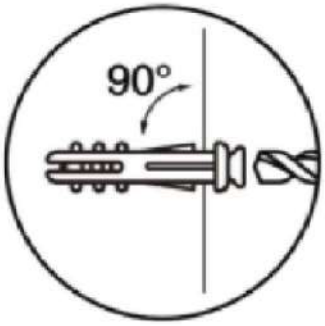

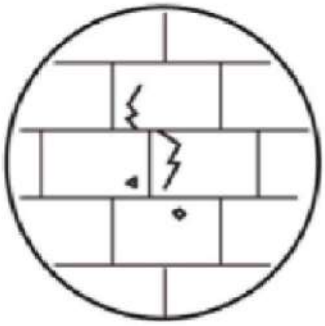

4. Take extra care when drilling into high walls or ceramic tiles. Wall anchors should be a tight fit for the hole. Never use wall anchors in ceilings.

MAINTENANCE

We recommend a yearly check to see if the wall anchor or screw has loosened. If so, please remove the existing wall anchor and screw, and use a new anchor.

ASSEMBLY INSTRUCTIONS

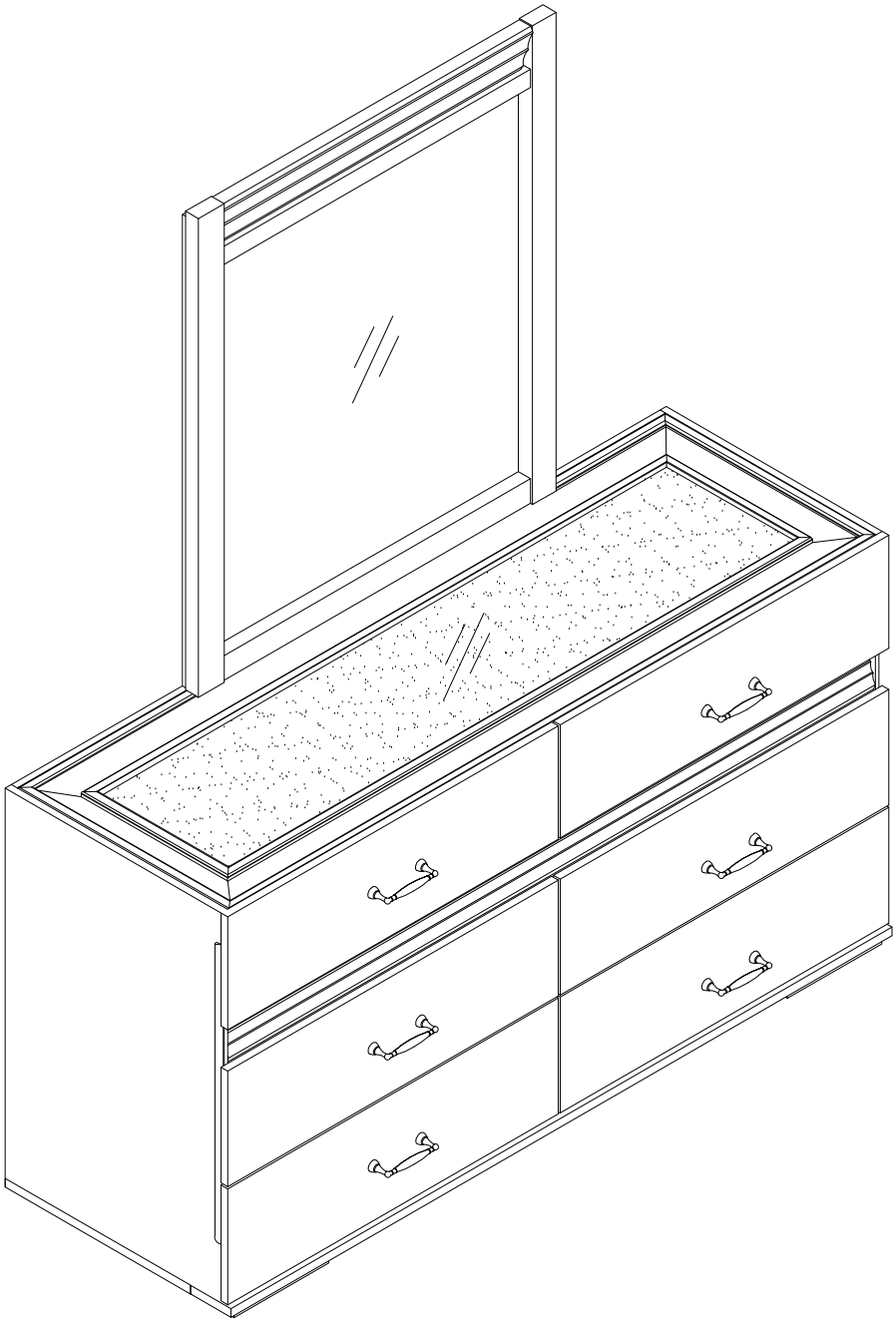

TOOLS REQUIRED

Screwdriver
(Not included)

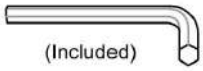

Allen Wrench

2 - People

ASSEMBLY RATING

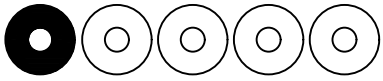

EASY ——► DIFFICULT

The Assembly Rating is a 5-point system showing the level of effort needed to assemble a specific product.

CHECK BEFORE STARTING

- [ ] **Are you missing anything?**

  Double-check all parts, hardware and accessories listed are all acccounted for.

- [ ] **Should we send any replacements?**

  Are there any irregularities or flaws in the parts? We can send replacements!

- [ ] **Check out our Quick Tips!**

  We recommend reviewing the pre-assembly handouts. Even experts need a refresher now and then!

- [ ] **Prep Time!**

  Please review the assembly instructions and all diagrams prior to assembling.

PRE ASSEMBLY INTRODUCTION

We understand building ready-to-assemble furniture can be a challenging experience for some. To help avoid confusion, we have provided some helpful tips that may speed up the process.

Teamwork

ALWAYS have at least two people to help with transporting and assembling the product to avoid potential injury and/or damage.

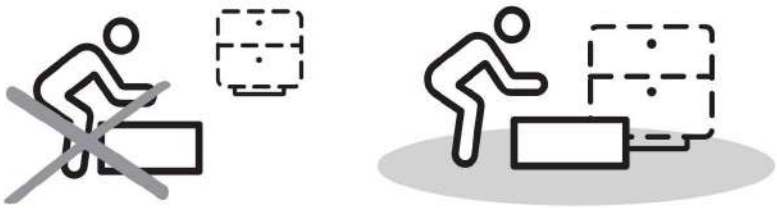

Suitable Location

Assembling near the area of the intended location is highly recommended.

Sufficient Space

Make sure you have enough space to move around during the assembly.

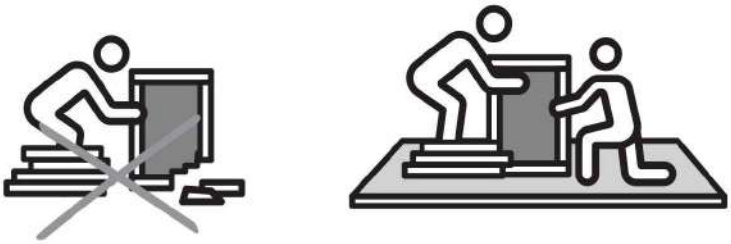

Avoid Scratches

Use cardboard, blankets or a carpeted area while assembling furniture to prevent to prevent scratches and damages.

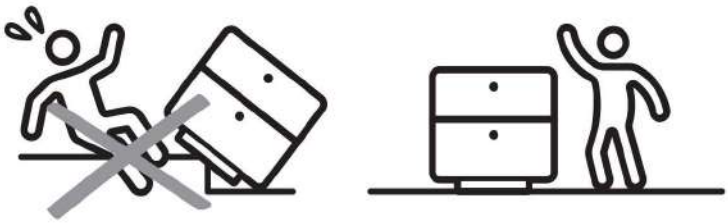

Flat Surface

Make sure the furniture rests on a flat and level surface with each leg evenly touching the floor.

ASSEMBLY AND CARE ADVICE

FAILURE TO FOLLOW THE GUIDELINES BELOW MAY RESULT IN INJURY AND/OR PROPERTY DAMAGE.

Position each part correctly and insert screws or bolts into their respective holes.

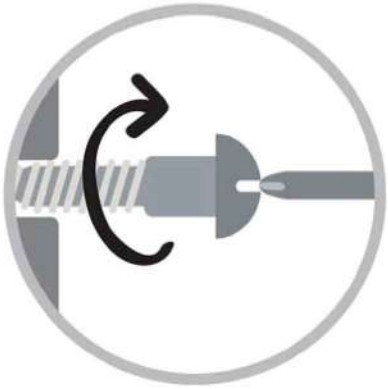

Turn clockwise to tighten and only tighten when step is completed or when instructed to do so.

Use the appropriate hand tools or power tools for assembly. Select steps, such as tightening screws and/or bolts, may require hand tools to avoid causing damage during assembly.

Save the instructions and store any supplied tools for later maintenance.

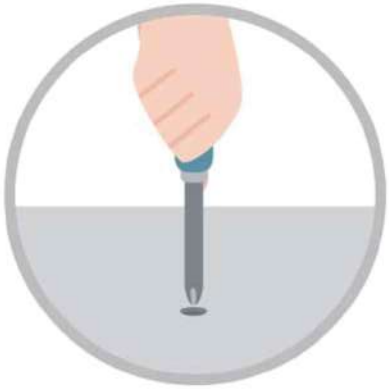

After two weeks, check and tighten any loose hardware and repeat again every six months thereafter.

IT IS THE USER'S RESPONSIBILITY TO MAINTAIN THE FURNITURE. THE HARDWARE MAY LOOSEN OVER TIME AND MAY CAUSE THE FURNITURE TO BE WOBBLY AND UNABLE TO SUPPORT ITS INTENDED WEIGHT CAPACITY. THIS MAY LEAD TO COLLAPSE AND MAY CAUSE SERIOUS INJURY

MIRROR

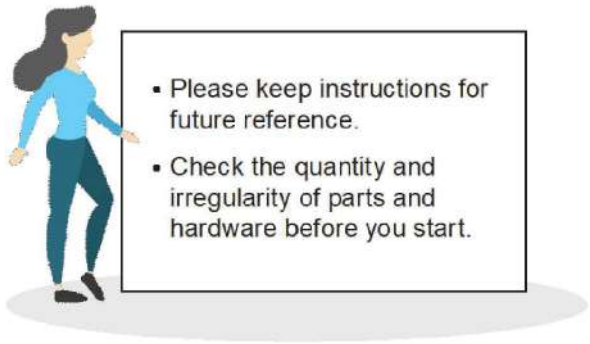

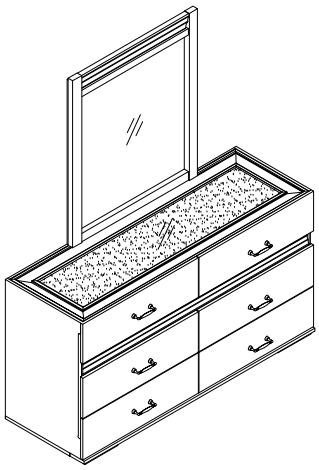

PARTS

1 1pc

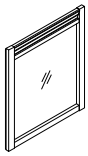

MIRROR

2 2pcs

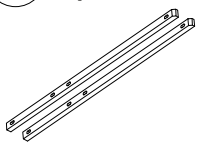

MIRROR SUPPORT

3 1pc

DRESSER

4 1pc

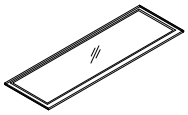

GLASS TOP

HARDWARE

HARDWARE INSIDE MIRROR

A 8pcs

JCBC M6 X 35mm

B 8pcs

Lock Washer

C 8pcs

Flat Washer

D 1pc

Allen Key M4

E 1pc

Adaptor **12V-1A**

HARDWARE INSIDE DRESSER

F 1pc

Anti-Tip Kit

G 1pc

Adaptor **12V-5A**

packed in 2 cartons

Carton	Description	Part			Hardware
	MIRROR	1		X1	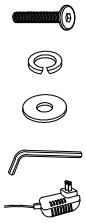 A x8pcs B x8pcs C x8pcs D x1pc E x1pc
	MIRROR SUPPORT	2		X2	
	DRESSER	3	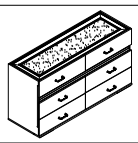	X1	F x1pc G x1pc
	GLASS TOP	4	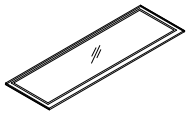	X1	

ASSEMBLY INSTRUCTIONS

1

Part ① x1pc
Part ② x2pcs
Part ③ x1pc

Align the mirror support (#2) to the mirror (#1).

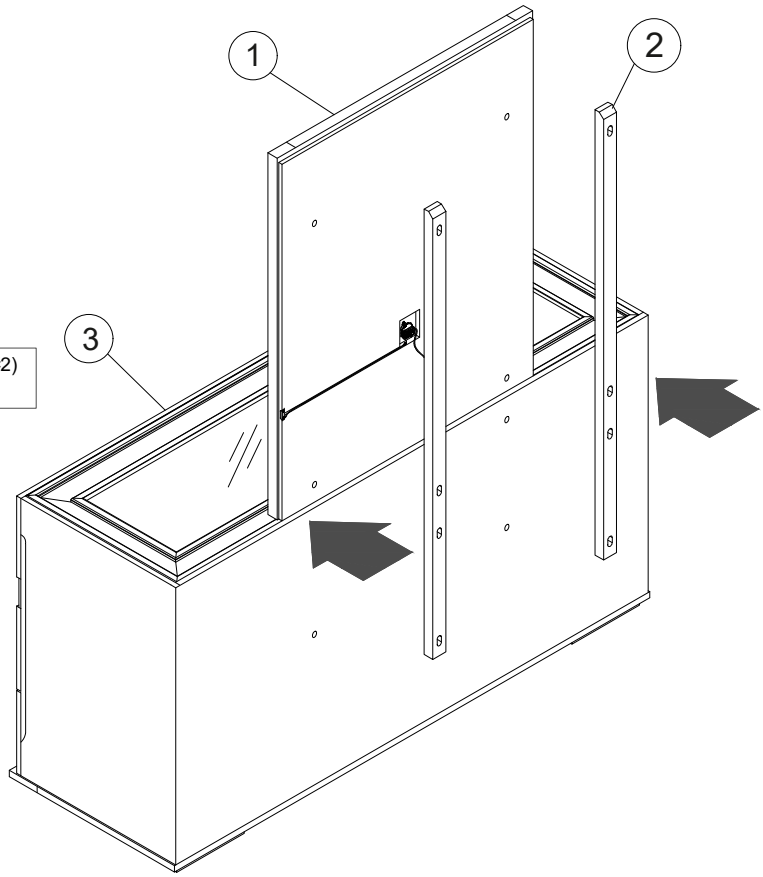

2

Part ① x1pc
Part ② x2pcs
Part ③ x1pc
Hardware Ⓐ x8pcs
Hardware Ⓑ x8pcs
Hardware Ⓒ x8pcs
Hardware Ⓓ x1pc

Secure the top of the mirror support (#2) to the mirror (#1) by using allen key to insert screw assembly of screw (#A) with lock washer (#B) and flat washer (#C). Secure the bottom of the mirror support (#2) to the dresser (#3) by using allen key (#D) to insert screw assembly of screw (#A) with lock washer (#B) and flat washer (#C).

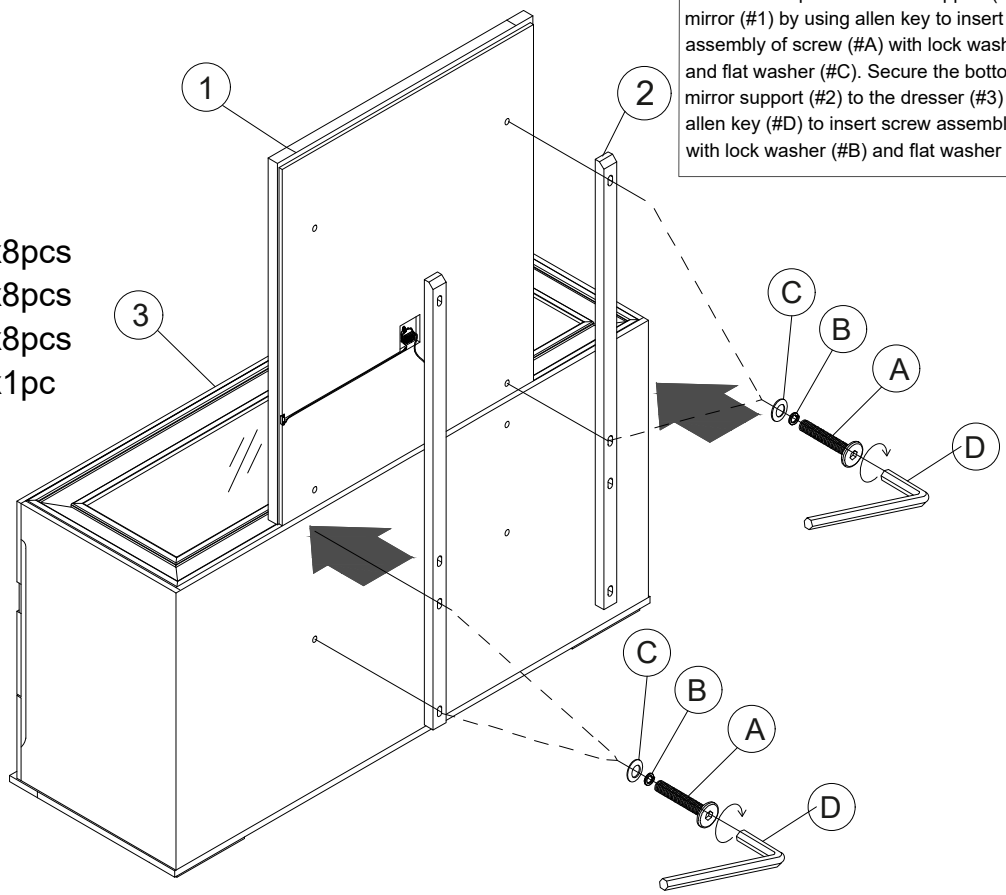

ASSEMBLY INSTRUCTIONS

3

Hardware (E) x1pc

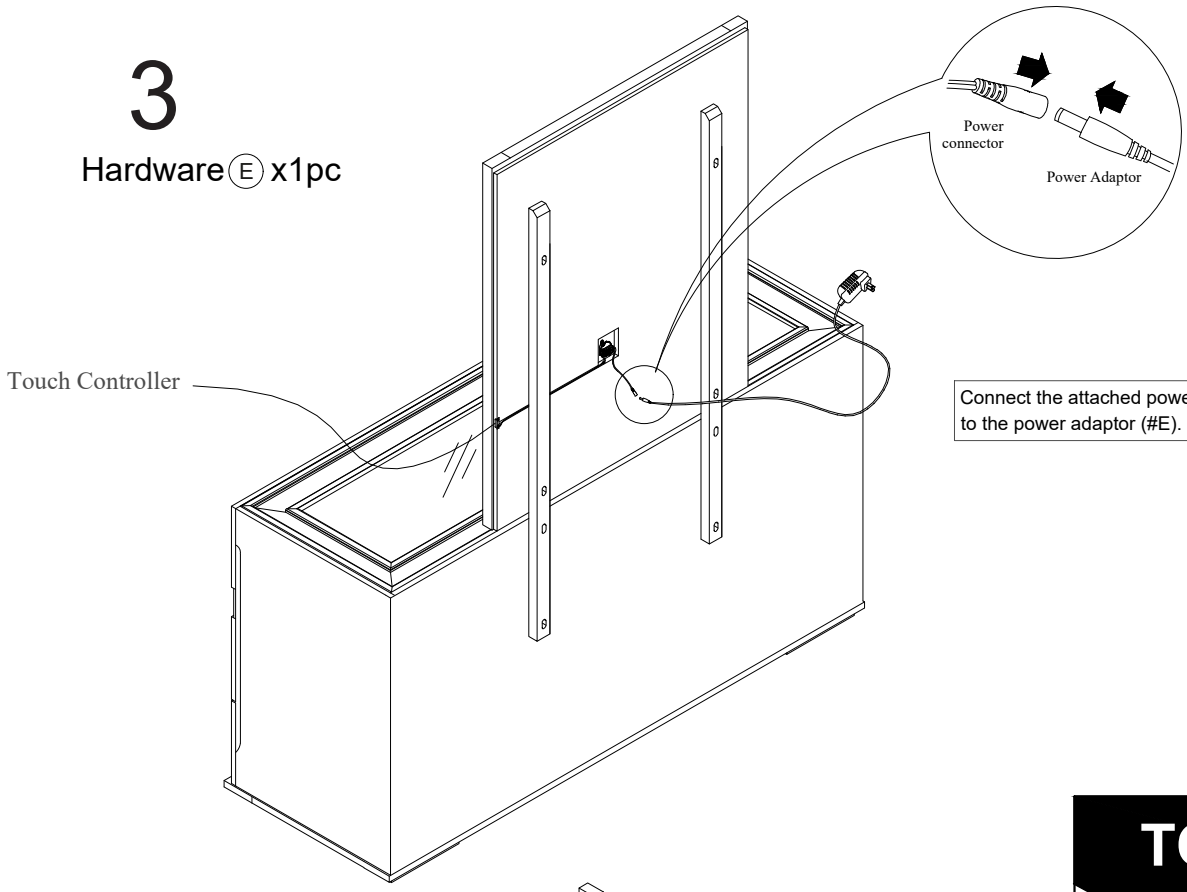

Connect the attached power connector to the power adaptor (#E).

4

Remark :

Please peel to remove Protection Film

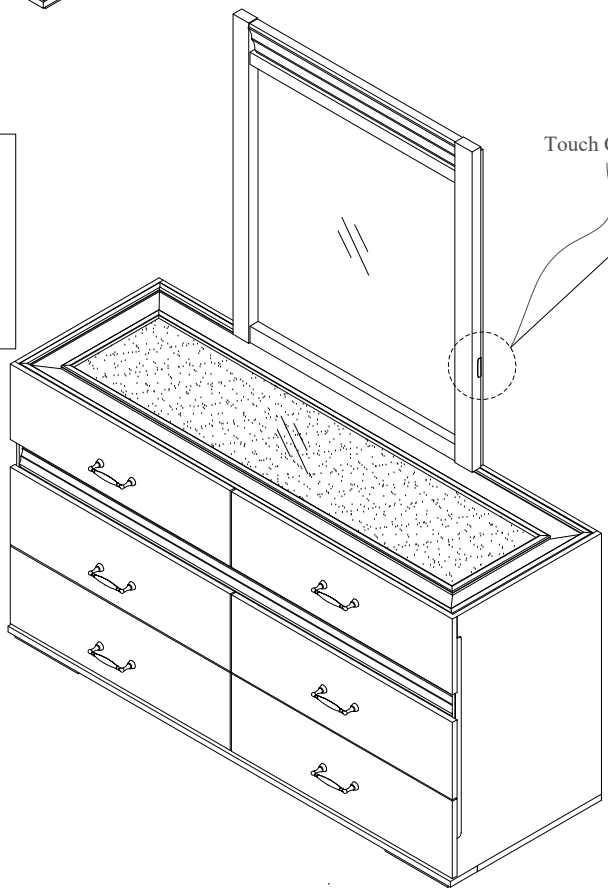

TOUCH ME!

Your Touch is the switch

Touch 1 - Night Light
Touch 2 - Energy Saver Light
Touch 3 - Bright Reading Light
Touch 4 - Off

ASSEMBLY COMPLETED

Please ensure the furniture rests on an even and flat surface. If the product wobbles or feels loose, double-check all bolts and/or screws are properly tightened and secured.

Keep this handy!

Please retain this instruction manual and any order-related information for future reference.

Lift, don't drag!

To avoid damage to product please always LIFT the product when transporting of adjusting the placement.

This product is intended for RESIDENTIAL USE ONLY and not for commercial use.