

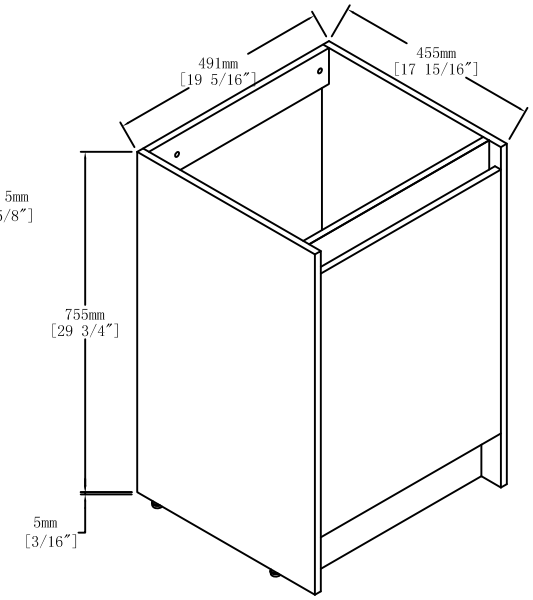

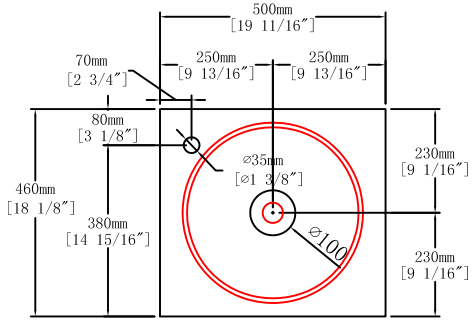

Top View

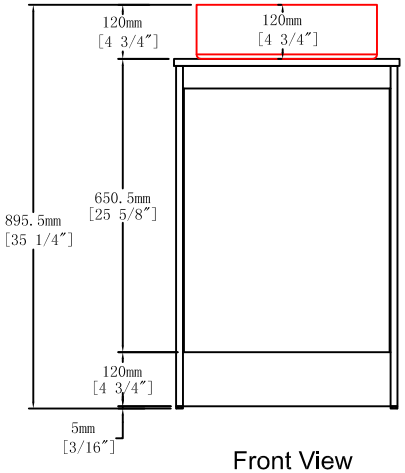

Front View

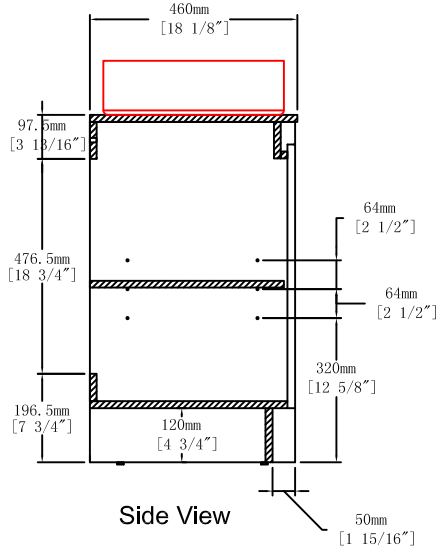

Side View

