PLEASE NOTE: Check that you have received all components and hardware before assembling.

Assembly Instructions
Dining Table

1

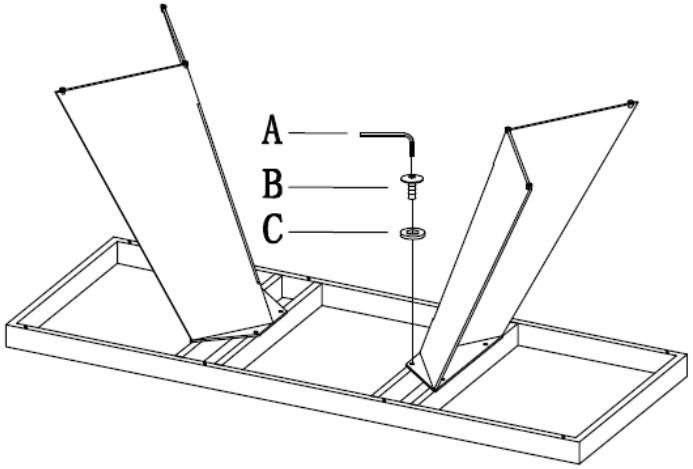

2

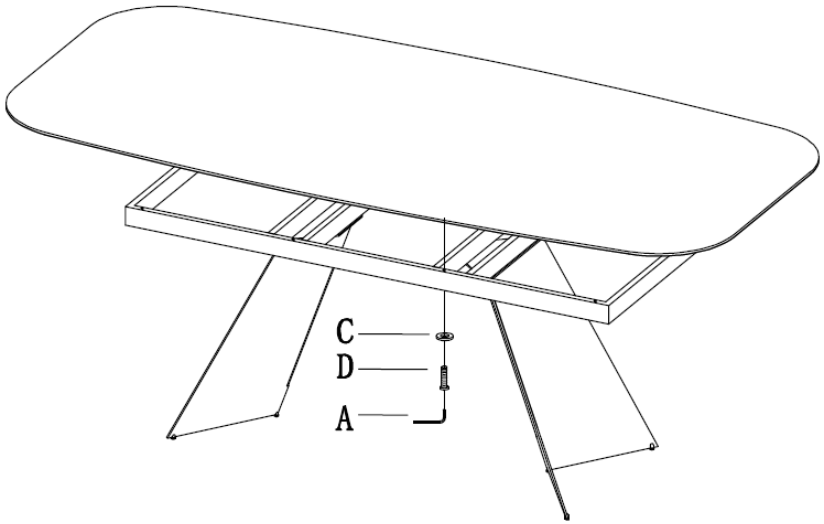

A (1 pc)
5mm

B (8 pcs)
M8 x 20mm

C (16 pcs)
Ø8mm

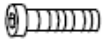

D (8 pcs)
M8 x 70mm

During assembly, hand tighten screws only. When the screws are in place, tighten completely.