Product Material : Rubber Wood / Particleboard / MDF / LVL
Product Dimension : L89.2" x W41.1" x 43.3"H
Weight Limit : 250lbs

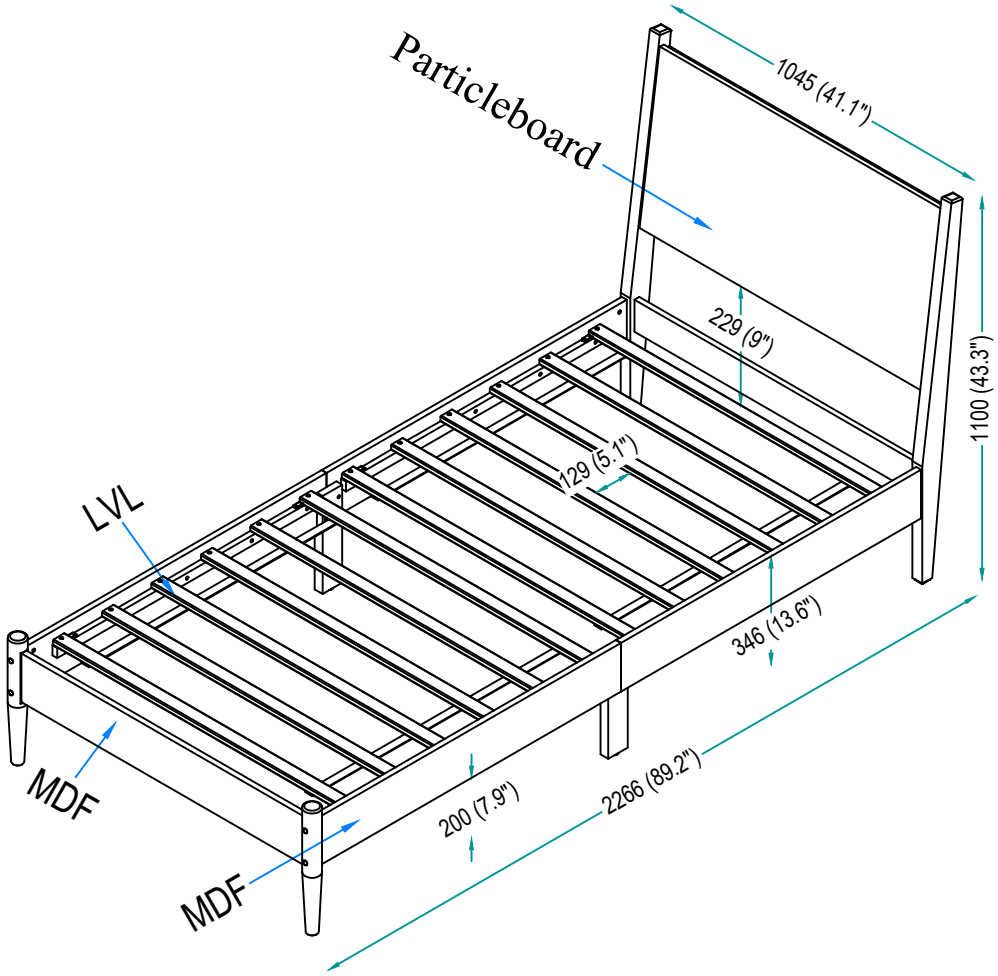

MT33004