Assembly Instructions

ASSEMBLY RATING

The Assembly Rating is a 5-point system that shows the degree of effort needed in
assembling a specific product (with 1 being easy and 5 being difficult). For most products,two persons are recommended.

EASY ●●●○○ DIFFICULT

Tools Required for Assembly:

Phillips Screwdriver

(Not Included)

Hammer

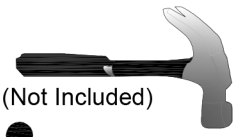

(Not Included)

2 PERSONS RECOMMENDED

90-DAY LIMITED REPLACEMENT PARTS WARRANTY

This item comes with a 90-day limited replacement parts warranty to the original purchaser of new products against defects in materials and workmanship for a period of ninety (90) days from the date of receipt. This warranty is not transferrable. If a Product covered by this warranty is determined to be defective or missing an essential item within the warranty period, the manufacturer will, unless otherwise required by applicable law, either replace the Product or send the missing part at its sole option and discretion.

Exclusions
This limited warranty provides coverage to the original retail purchase and does not apply to rented, business, commercial, institutional, or other non-residential uses. This limited warranty does not apply to (i) merchandise that was, at any time, used as a floor sample or display model, (ii) any merchandise purchased "as is" or second-hand, (iii) any merchandise purchased at a distress sale or a going-out-of-business sale, or (iv) any merchandise purchased from a liquidator. All warranties, whether express or implied, cover only normal household usage. No warranty, express or implied, applies to any condition resulting from misuse, abuse, delivery or transportation damage, nor any condition resulting from incorrect or inadequate maintenance, cleaning or care. This warranty does not cover, for example: abuse, accident, protective coatings, cosmetic damage (e.g. scratches, dents, cracks), damage caused by use with other products (e.g. accessories, housing), damages from shipping, improper assembly or operation, lack of reasonable use, misuse, modifications or alterations, normal wear and tear or aging.

Shipping
This limited warranty does not cover shipping charges incurred by any means. Retailer or customer must arrange for shipping under all circumstances.

Chemical Treatments
This limited warranty does not cover damages caused by use of chemical treatments or protective coatings on the finish, leather, or upholstered fabric. Any such chemical treatments or protective coatings voids all warranty.

Upholstered Fabric and Finishes
This limited warranty does not cover (i) damages resulting from excessive soiling, improper or unapproved cleaning methods, (ii) fading or other damages resulting from exposure to sunlight, (iii) damages resulting from household humidity, or (iv) damages resulting from any liquid, including but not limited to alcohol and water. Any use of improper or unapproved cleaning methods voids all warranties.

CLAIM PROCEDURE
If a problem should arise which you feel is covered by our limited warranty, contact the authorized retailer from whom you purchased your furniture. Please make sure any claim for warranty service is accompanied by the necessary information to satisfy the warranty requirements. If necessary, the retailer will contact manufacturer to establish service. Manufacturer reserves the right to require defective parts be returned upon request or proper proof (e.g. images, video) be provided for claim. Manufacturer is not responsible for scheduling or the cost of transporting your furniture or its replacement parts from your home to the retailer or from the retailer to your home. You must make those arrangements with the retailer.

DISCLAIMER
No other express warranty has been made or will be made on behalf of manufacturer with respect to the furniture and its parts, or the operation, repair, or replacement of the furniture and its parts. Furthermore, no representative of manufacturer or its distributors or retailers is authorized to make any changes or modifications to these limited warranties.

Some retailers offer extended or additional warranties either from the retailer or through a third-party. Manufacturer shall not be liable under any extended or additional warranties offered by any retailer or through a third-party. In no event shall manufacturer be responsible for consequential or incidental damages, such as loss of use, inconvenience, loss or damage to personal property, whether indirect or direct, and whether arising in contract or tort. In no event shall manufacturer's responsibility exceed the purchase price of the product or its replacement.

Legal Rights
This warranty gives the owner specific legal rights and you may have other rights, which may vary from state to state.

ASSEMBLY & CARE ADVICE

FOR YOUR FURNITURE TO LAST,CORRECT ASSEMBLY AND PROPER MAINTENANCE ARE NECESSARY
PLEASE FOLLOW THE INFORMATION PROVIDED BELOW TO FULLY ENJOY YOUR FURNITURE.

BASIC ASSEMBLY TECHNIQUES

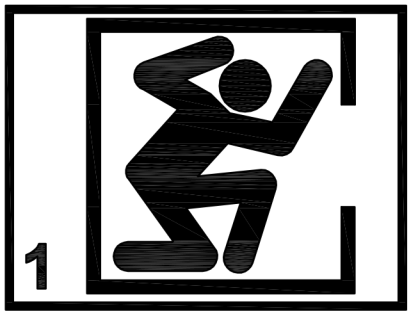

It is highly recommended that the assembly should be done near the area of its intended location. Make sure you have enough space to move around during the assembly.

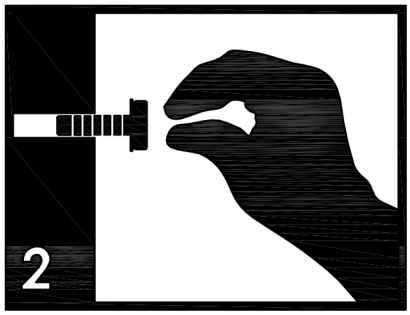

Position each part correctly and insert screws or bolts into their respective holes by hand tighten or using the proper hand tool. Only tighten when step is completed or when instructed to do so.

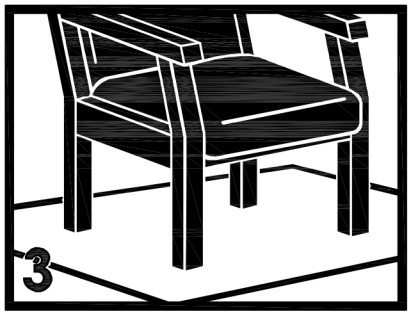

Use cardboard or carpet area when assembling furniture to prevent scratches.Make sure the furniture rests on a flat and level surface with each leg evenly touching the floor.

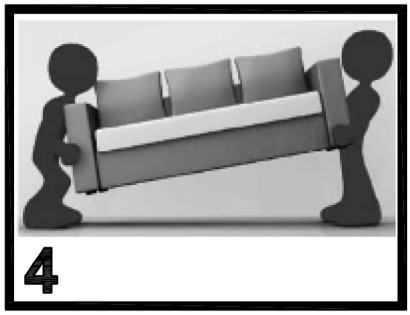

ALWAYS have at least two people to help with transporting and assembling the product to avoid any potential injury and/or damage.

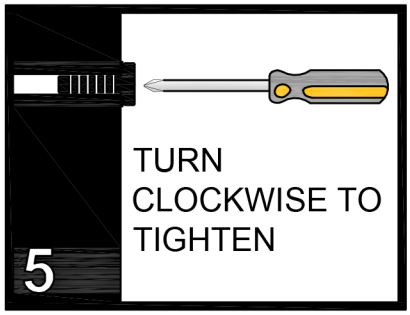

Make sure all parts are properly aligned,then use the appropriate hand tool to completely tighten the bolts or screws.Do not use power tools and do not overtighten.

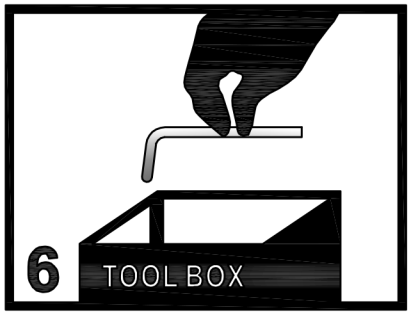

Save the instructions and store any supplied tool for later maintenance. After two weeks,check and tighten any loose hardware and repeat again every six months thereafter.

IT IS THE USER'S RESPONSIBILITY TO MAINTAIN THE FURNITURE.THE HARDWARE MAY LOOSEN OVER TIME AND MAY CAUSE THE FURNITURE TO BE WOBBLY AND UNABLE TO SUPPORT ITS INTENDED WEIGHT CAPACITY.THIS MAY LEAD TO COLLAPSE AND MAY CAUSE SERIOUS INJURY.

FAILURE TO FOLLOW THE GUIDELINES ABOVE MAY RESULT IN INJURY AND/OR PROPERTY DAMAGE.

PRE-ASSEMBLY INTRODUCTION

Unless you are particularly adept at assembling flat-pack/knock-down furniture, we understand building ready-to-assemble furniture can be a frustrating experience for some. To help avoid confusion and to make the assembly process quicker and smoother, we have provided some helpful tips. Before you begin the assembly, please read the following :

1. Due to the size and/or weight on most of the ready-to-assemble furniture, it is highly recommended that the assembly should be done near the area of its intended location. Make sure you have enough space to move around during the assembly. ALWAYS have at least two people to help with transporting and assembling of the product to avoid any potential injury and/or damage.
2. To protect from damage, assemble the item on a clean, protective surface, such as on a carpet or cardboard.
3. Make sure you have taken all the parts and hardware out of their packaging. Do not throw away packaging material until assembly is completed.
4. Make sure all parts and hardware are accounted for by comparing the actual parts and hardware to the list provided in the assembly instructions. Also check for any irregularity such as crack, flaw or improperly drilled hole. If there is any problem or missing piece, please contact the manufacturer or the supplier. Please have the model number, part number and a brief description of the problem ready will help expedite the replacement process.
5. Read the entire instruction manual and view the diagrams first before assembling. Arrange your parts in order of use and group the identical hardware together to make it easier to grab each piece as you begin to assemble.
6. During the assembly process, make sure parts are properly aligned before tightening with the tool provided or required for the assembly. Do not use power tools and do not over tighten.
7. When applying glue to the wood dowels to bond the parts together, please be ABSOLUTELY certain that the parts are correct and lined up with each other (refer to diagrams and take notice of the various pre-drilled hole locations). When in doubt, assemble the parts together first and if the parts fit right, then apply glue to the wood dowels.

CAMLOCK FASTENER ASSEMBLY INSTRUCTIONS

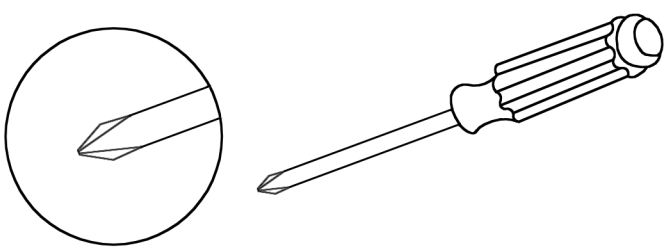

Note:Every cam lock bolt must have a cam lock connector in order to fasten the parts together.

(1) **Secure the threded end of the cam bolt by using a screwdriver.**

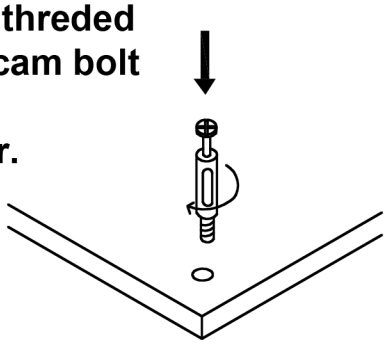

Tun right (clokwise) to tighten.

Align the cam connector with its side opening (or arrow) pointing to the small drilled hole.

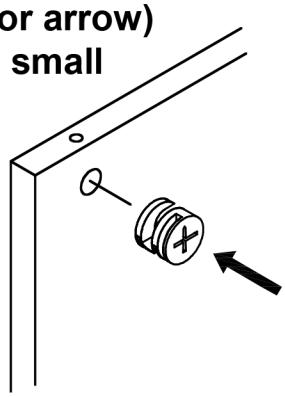

(2)

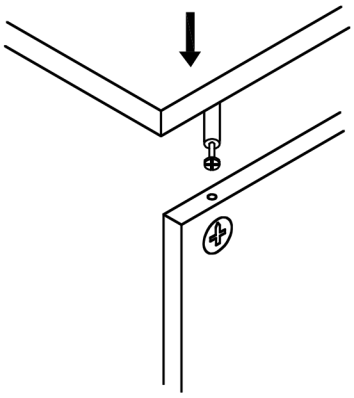

Insert the cam lock bolt into the pre-drllled hole above the cam connector.

(3) **Two parts should fit snugly against each other.**

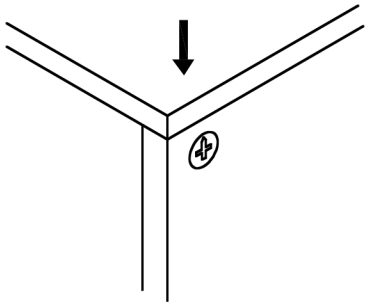

(4)

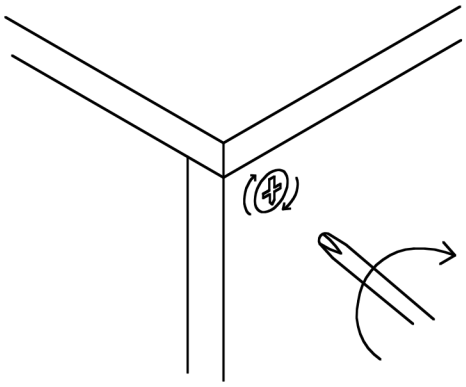

Turn right(clockwise) to tighten.

Turn the cam connector with a screwdriver until it will not turn any more with light to moderate force.

PARTS LIST

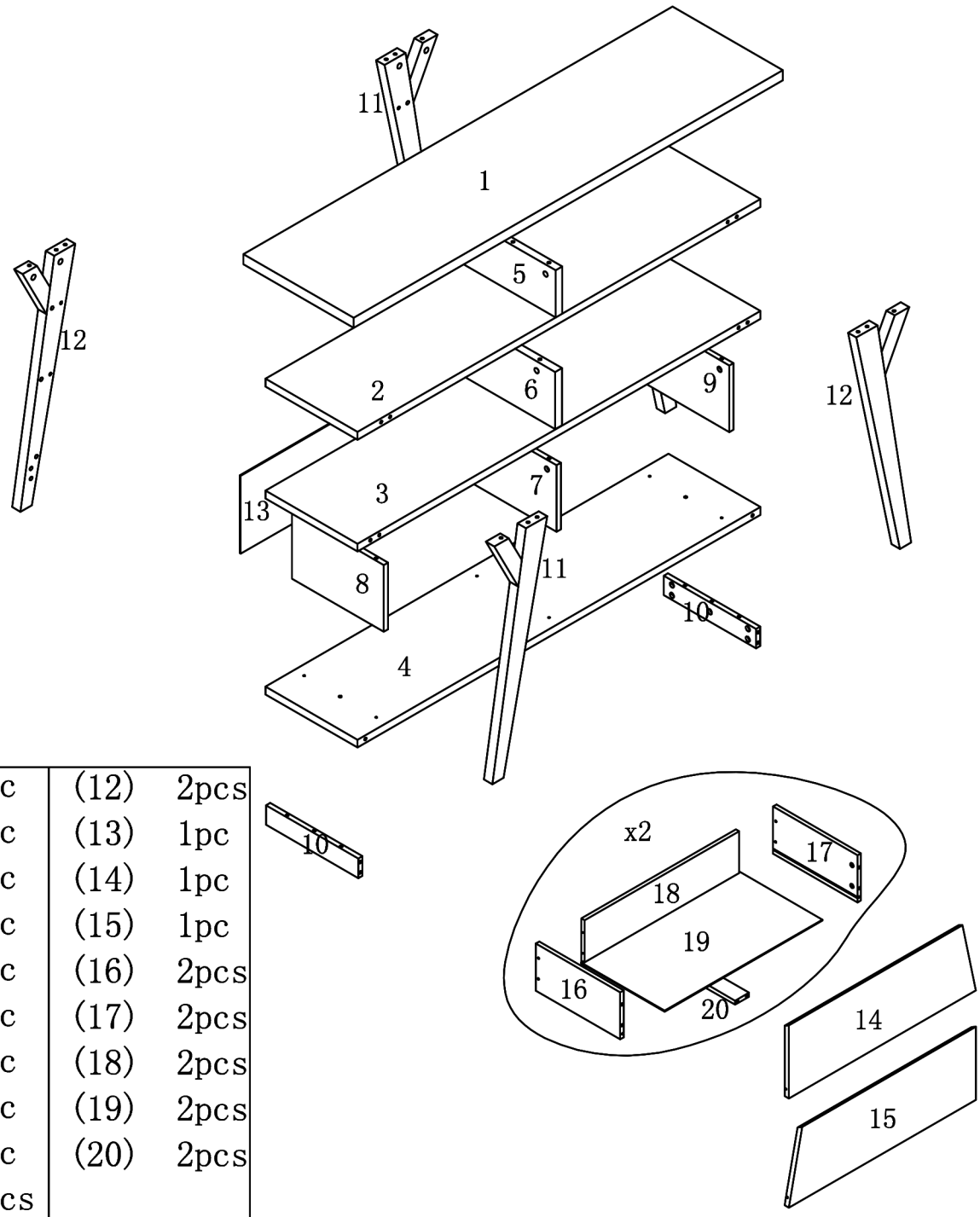

(1)	1pc	(12)	2pcs
(2)	1pc	(13)	1pc
(3)	1pc	(14)	1pc
(4)	1pc	(15)	1pc
(5)	1pc	(16)	2pcs
(6)	1pc	(17)	2pcs
(7)	1pc	(18)	2pcs
(8)	1pc	(19)	2pcs
(9)	1pc	(20)	2pcs
(10)	2pcs		
(11)	2pcs		

Before you begin,please read"Assembly and Care Advice","Pre-Assembly Introduction"and "Cam Lock Fastener Assembly Instructions".

HARDWARE LIST

A		L29	40pcs
B		ϕ15	40pcs
C		L20	8pcs
D		ϕ12	8pcs
E		ϕ8x25	27pcs
F		ϕ6x30	4pcs
G		ϕ4x30	12pcs
H		ϕ4x40	6pcs
I		M7x48	4pcs
J		ϕ8x16x2	4pcs
K		ϕ22(WH3)	4pcs
L		ϕ22(DTP)	8pcs
M			28pcs
N		ϕ16	4pcs
O		197×5×1	1pc
P		⌀4×25	1pc
Q		⌀5×40	1pc
R		⌀8×40	1pc
S		12×12×1	2pcs
T		80×25×132H	1pc
U		⌀4×16	2pcs
V		Glue: For securing please apply to wood dowel first before inserting into panel	1pc

Due to the size and/or weight of this product,it is highly recommended that the assembly should be done near the area of its intended location.Make sure you have enough space to move around during the assembly.ALWAYS have at least two people to help with transporting and assembling the product to avoid any potential injury and/or damage

ASSEMBLY INSTRUCTIONS

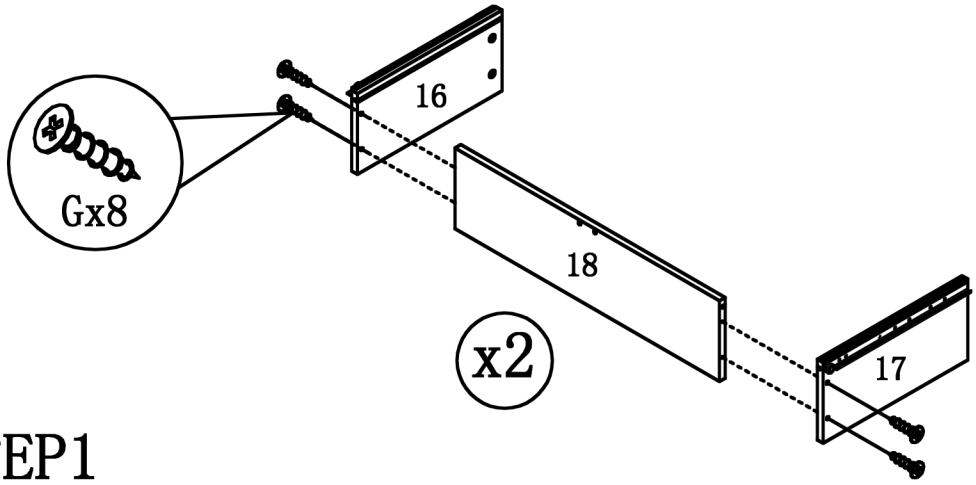

STEP1

STEP2

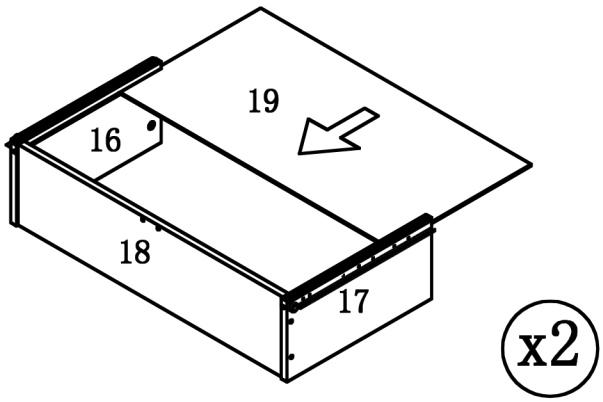

STEP3

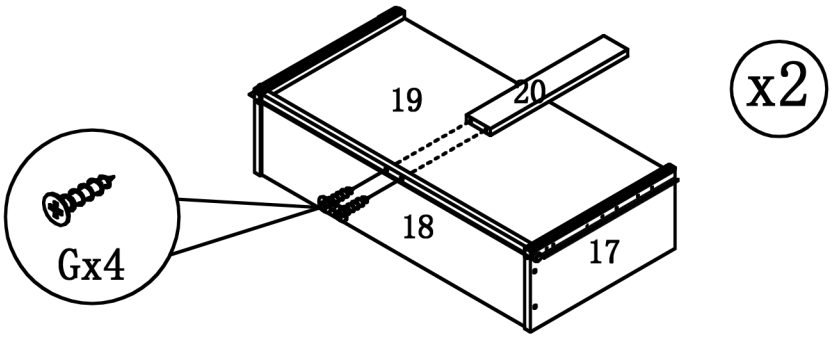

ASSEMBLY INSTRUCTIONS

HOW TO

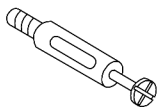

Cam Bolt

Cam Lock

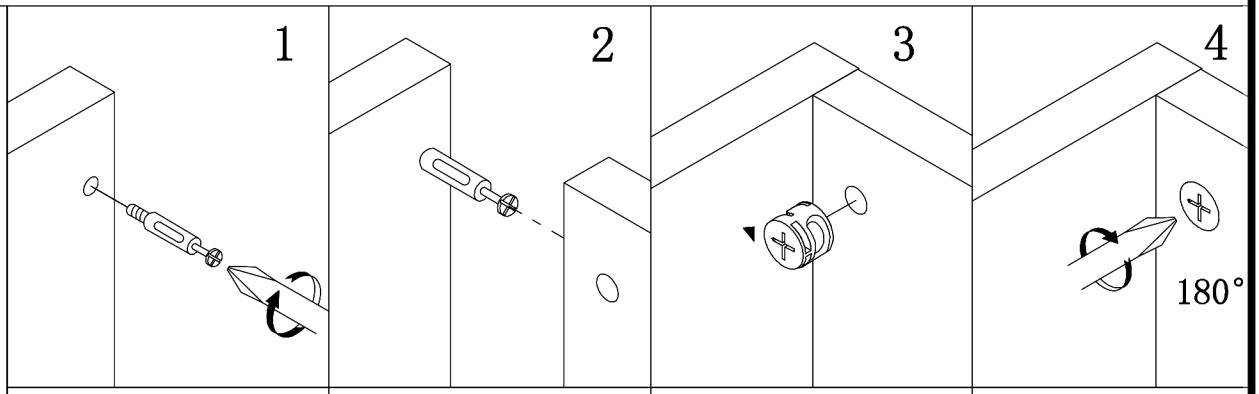

1. Screw Cam Bolt into panel.	2. Insert Cam Bolt into bolt hole of joining panel.	3. Insert Cam Lock. arrow facing bolt.	4. Gently turn Cam Lock clockwise to lock position.

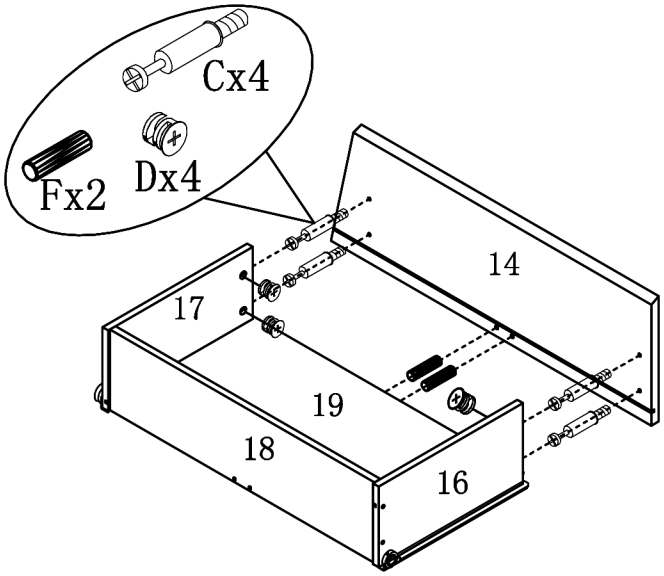

STEP4

STEP5

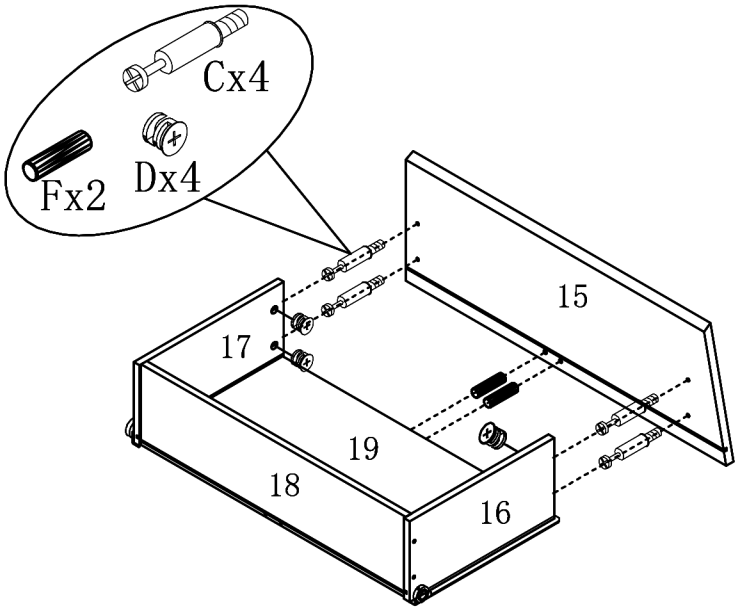

ASSEMBLY INSTRUCTIONS

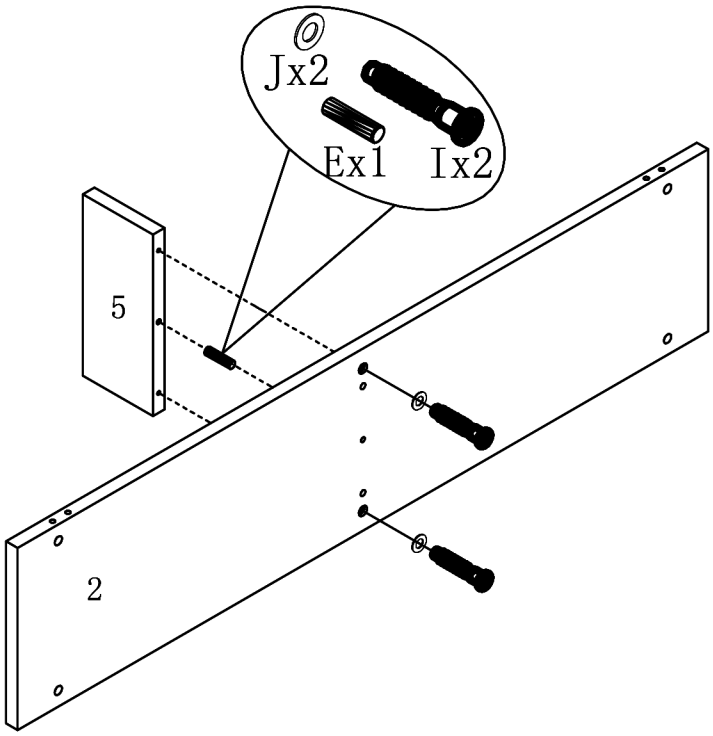

STEP6

STEP7

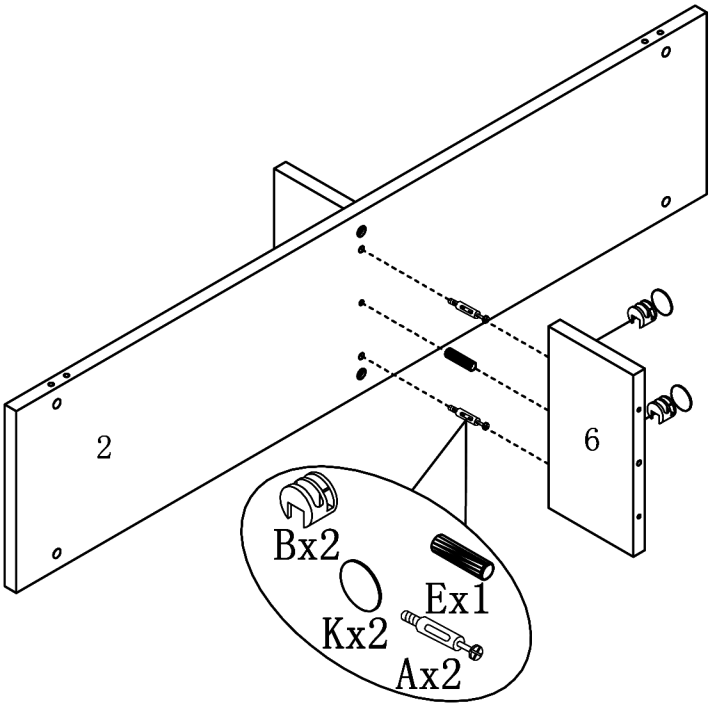

ASSEMBLY INSTRUCTIONS

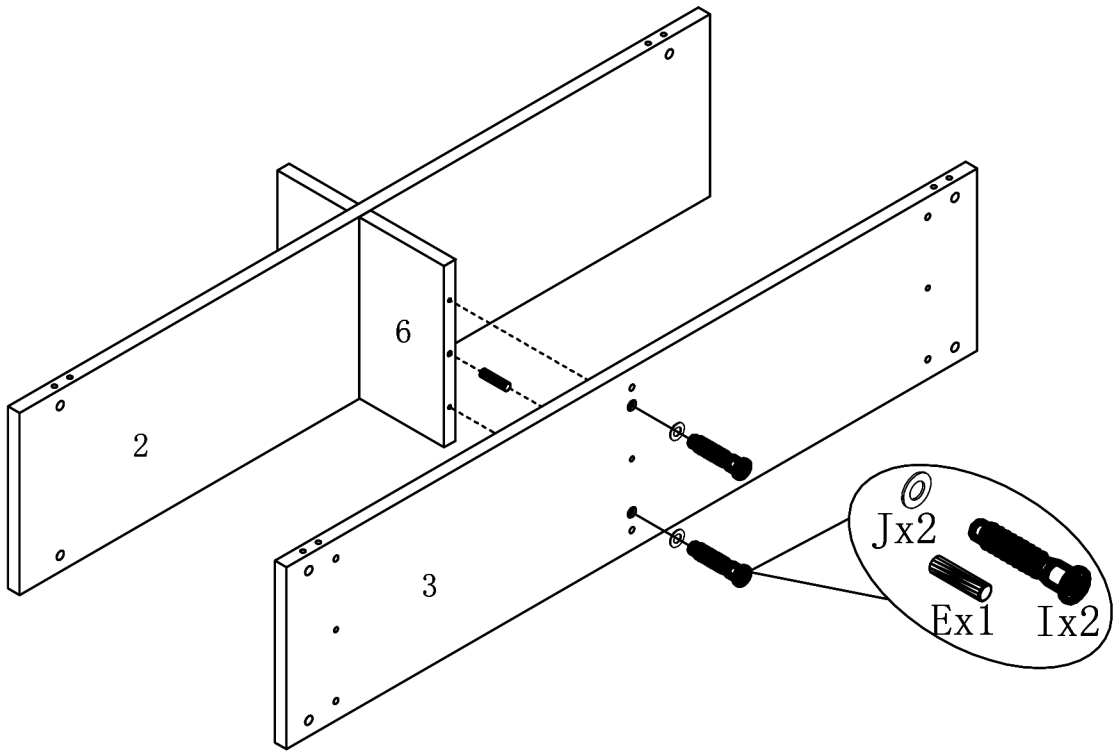

STEP8

STEP9

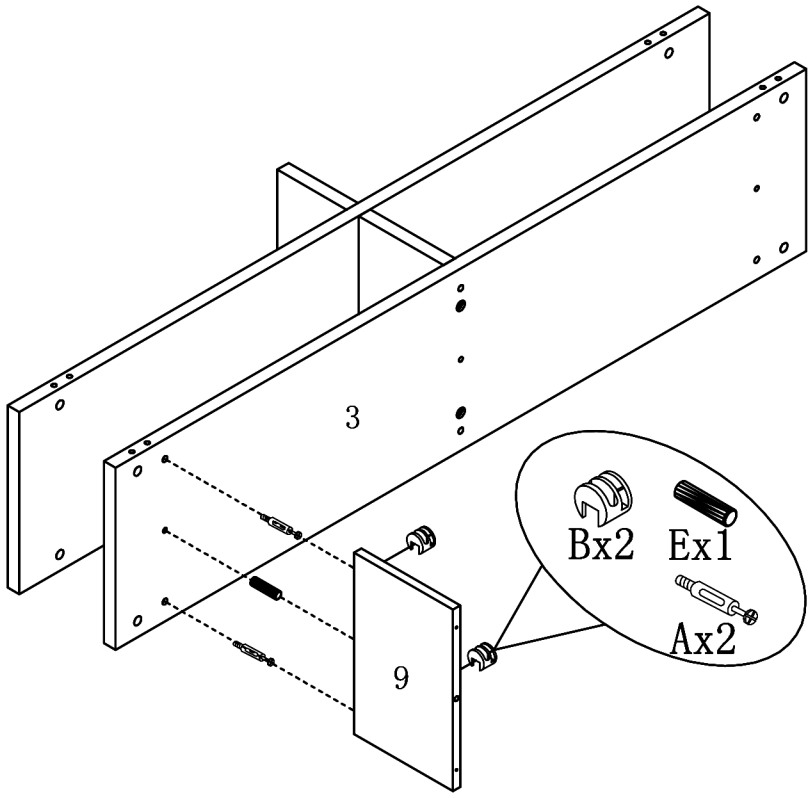

ASSEMBLY INSTRUCTIONS

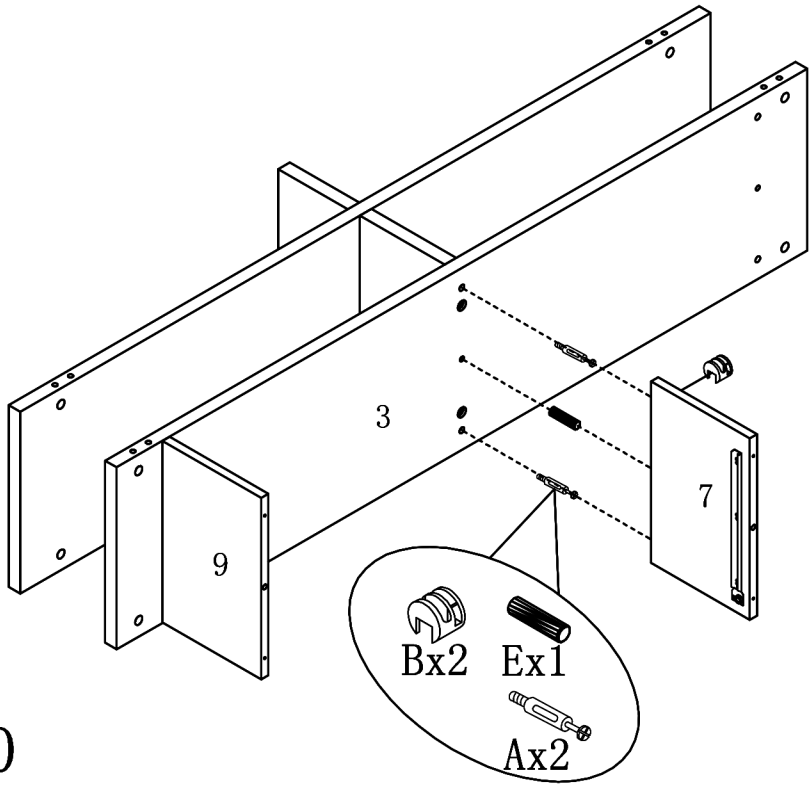

STEP10

STEP11

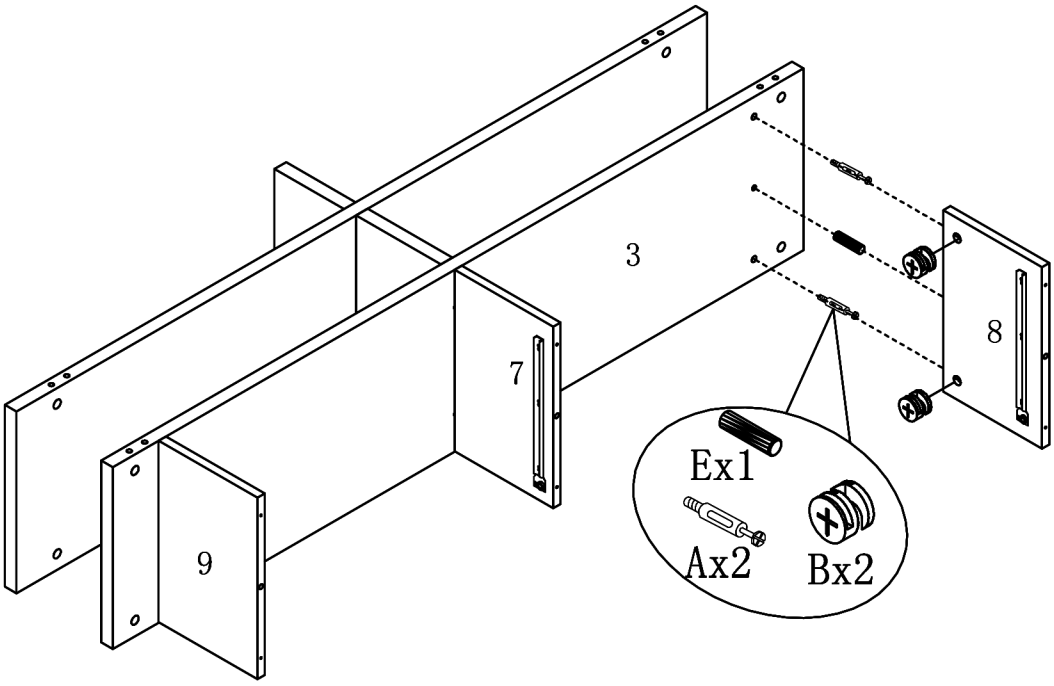

ASSEMBLY INSTRUCTIONS

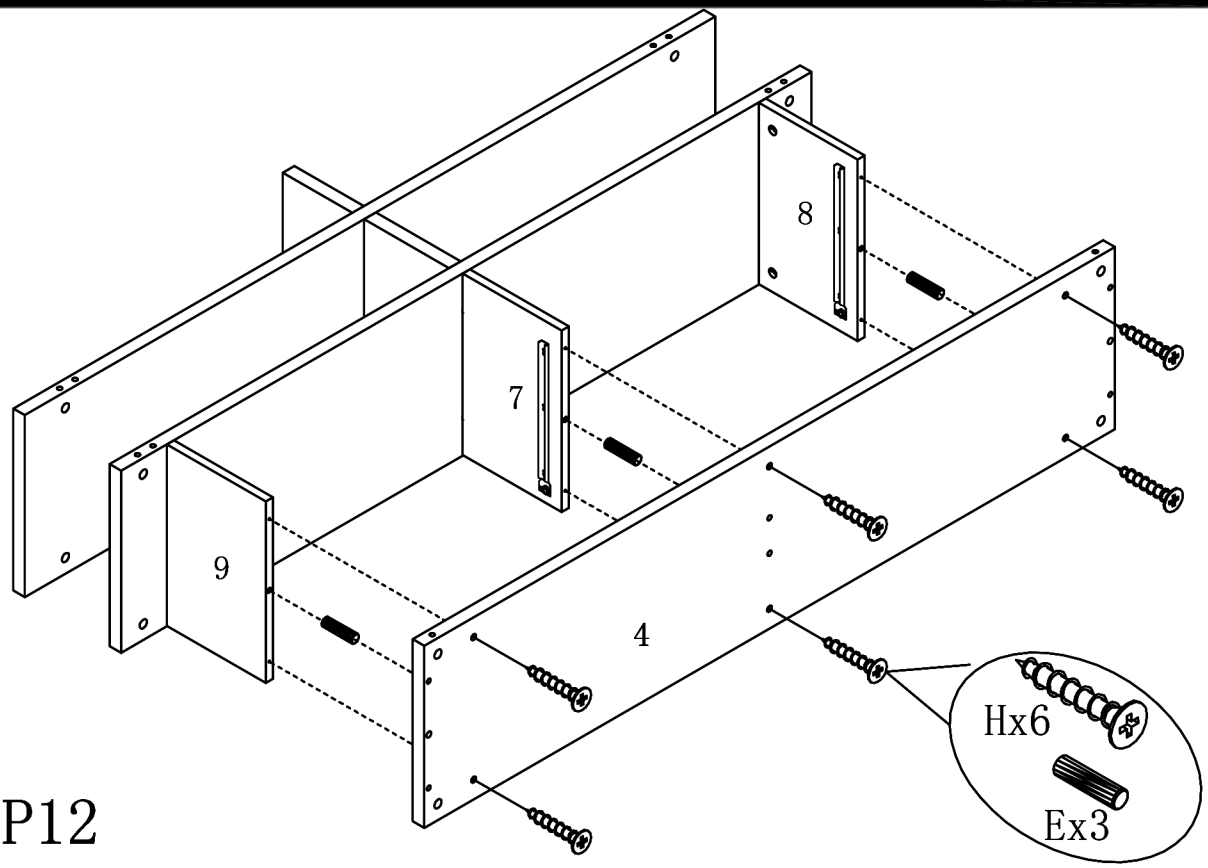

STEP12

STEP13

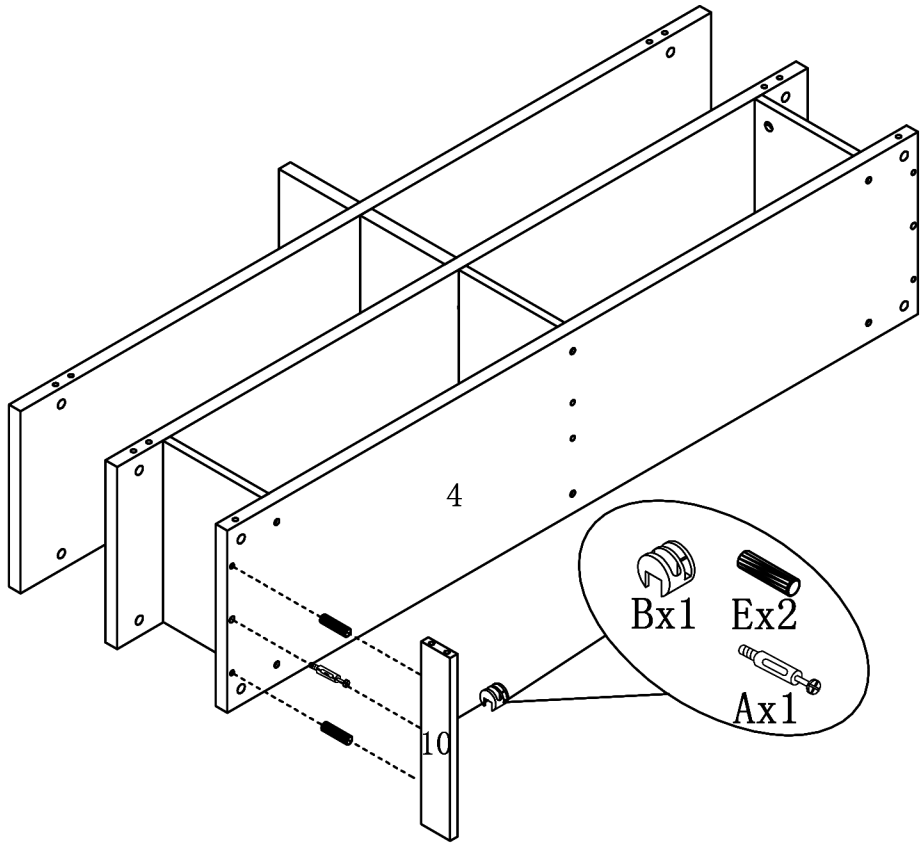

ASSEMBLY INSTRUCTIONS

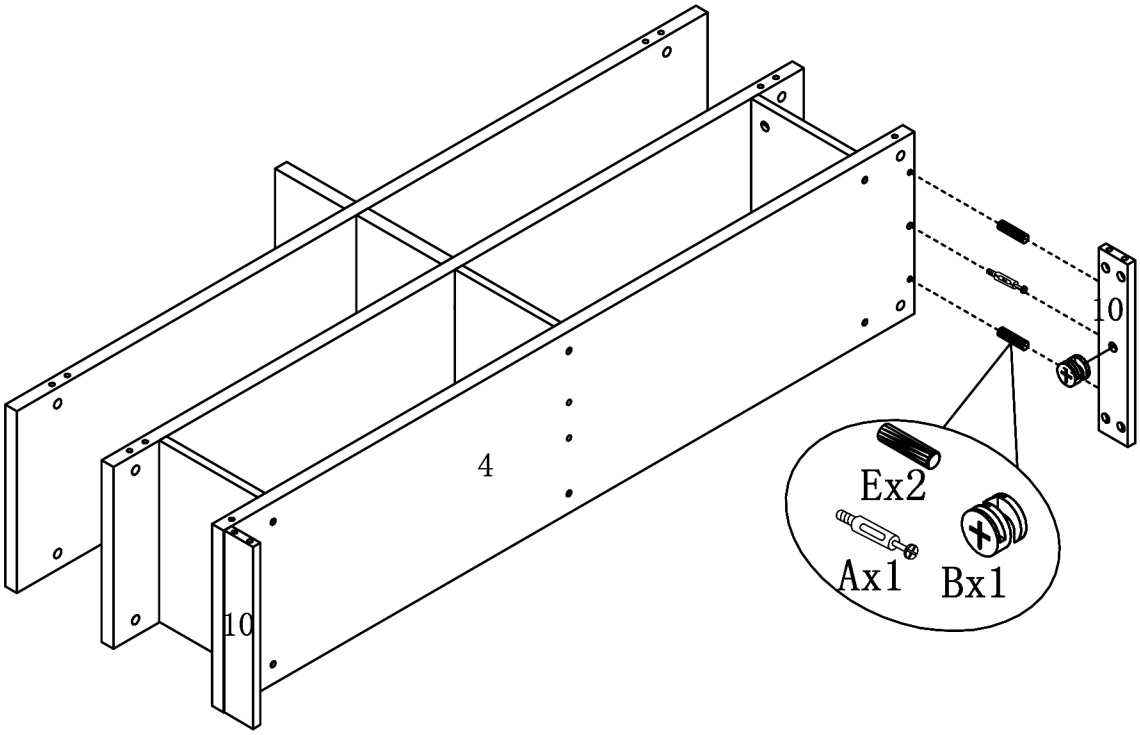

STEP14

STEP15

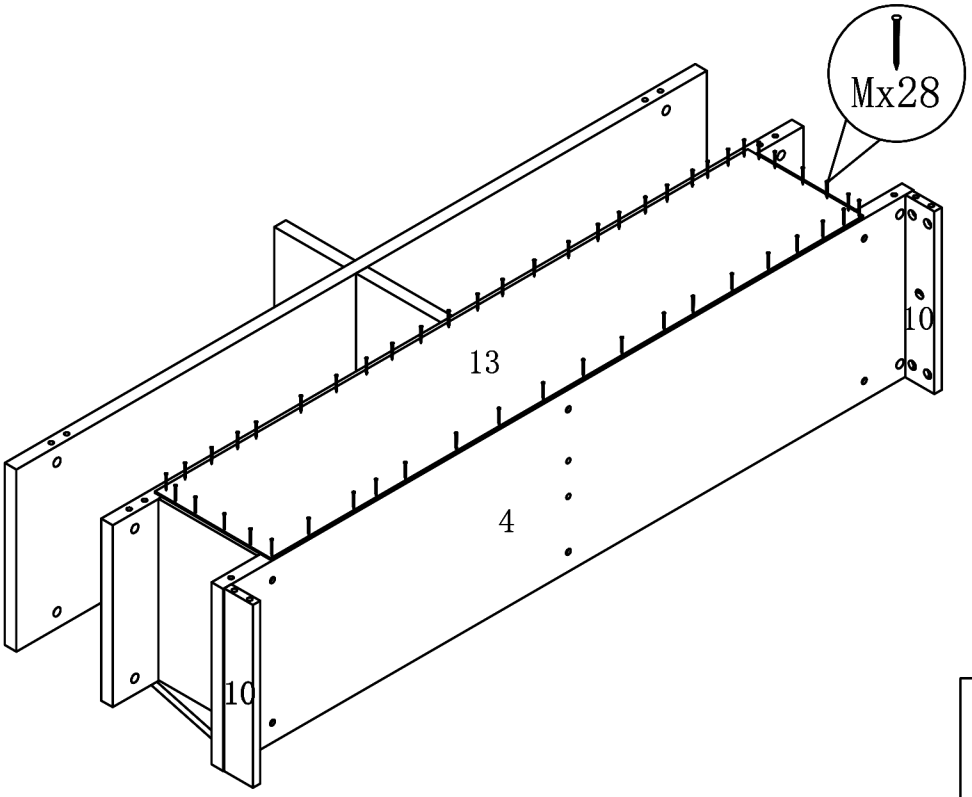

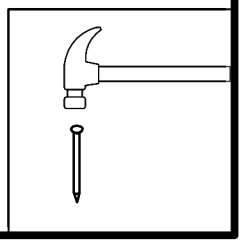

ASSEMBLY INSTRUCTIONS

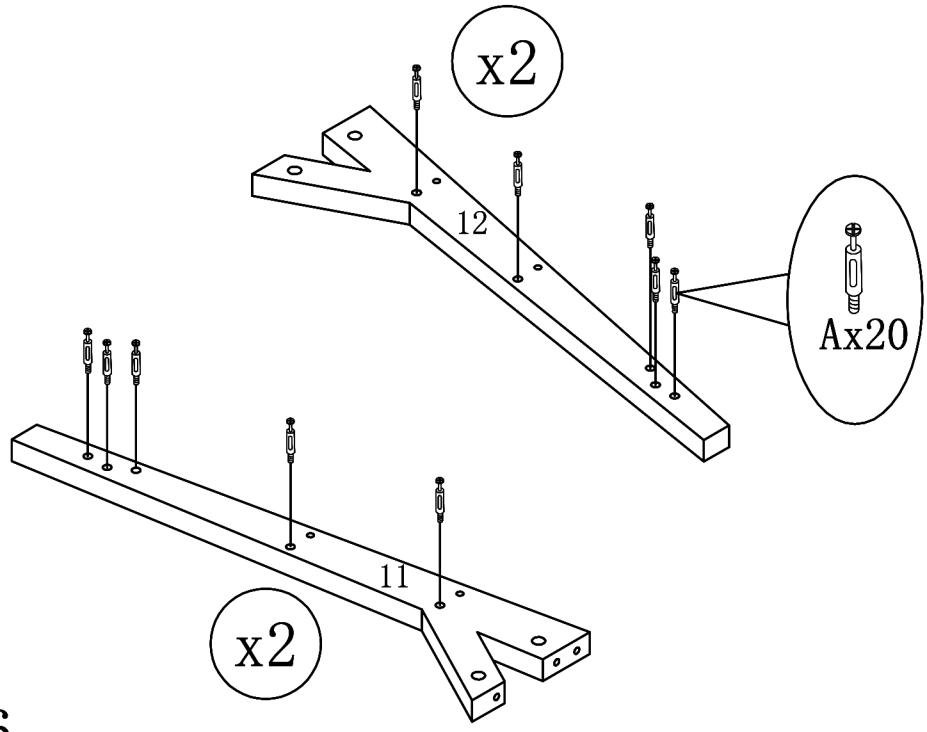

STEP16

STEP17

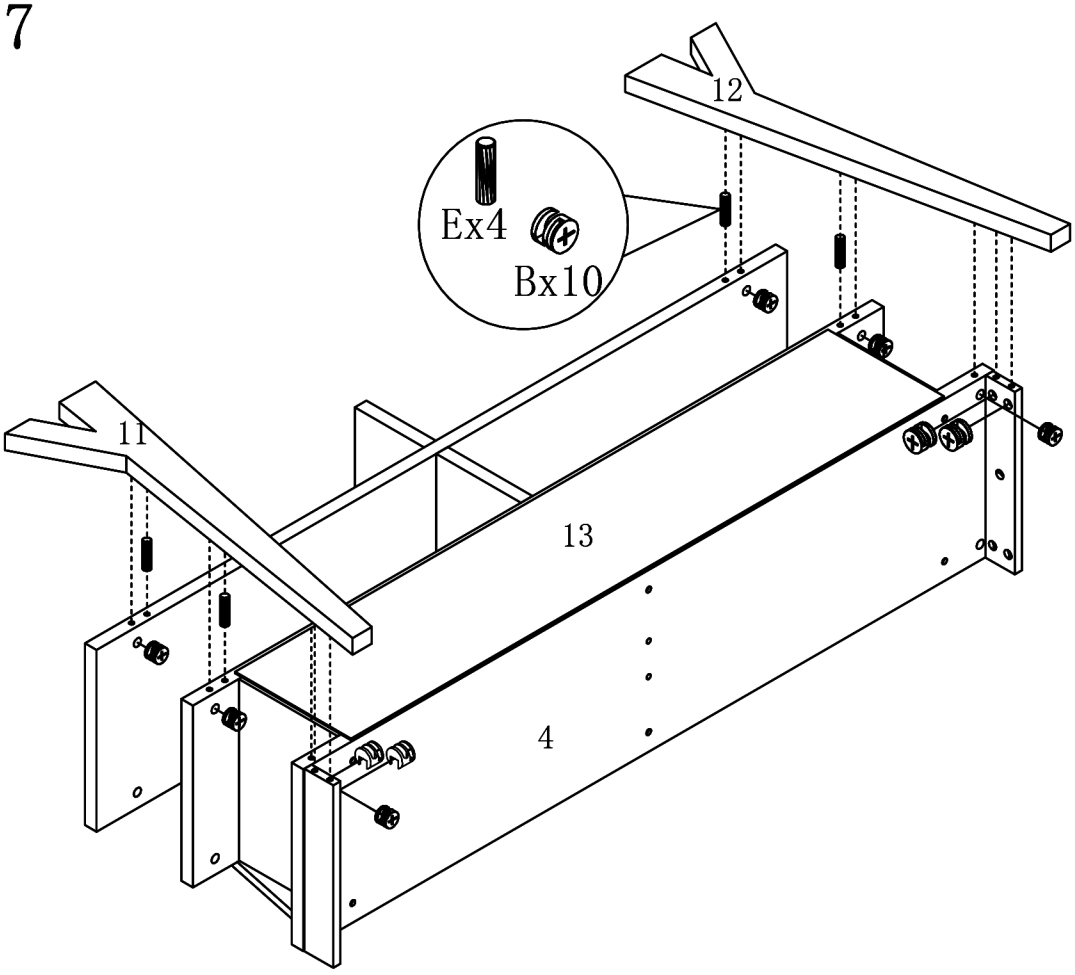

ASSEMBLY INSTRUCTIONS

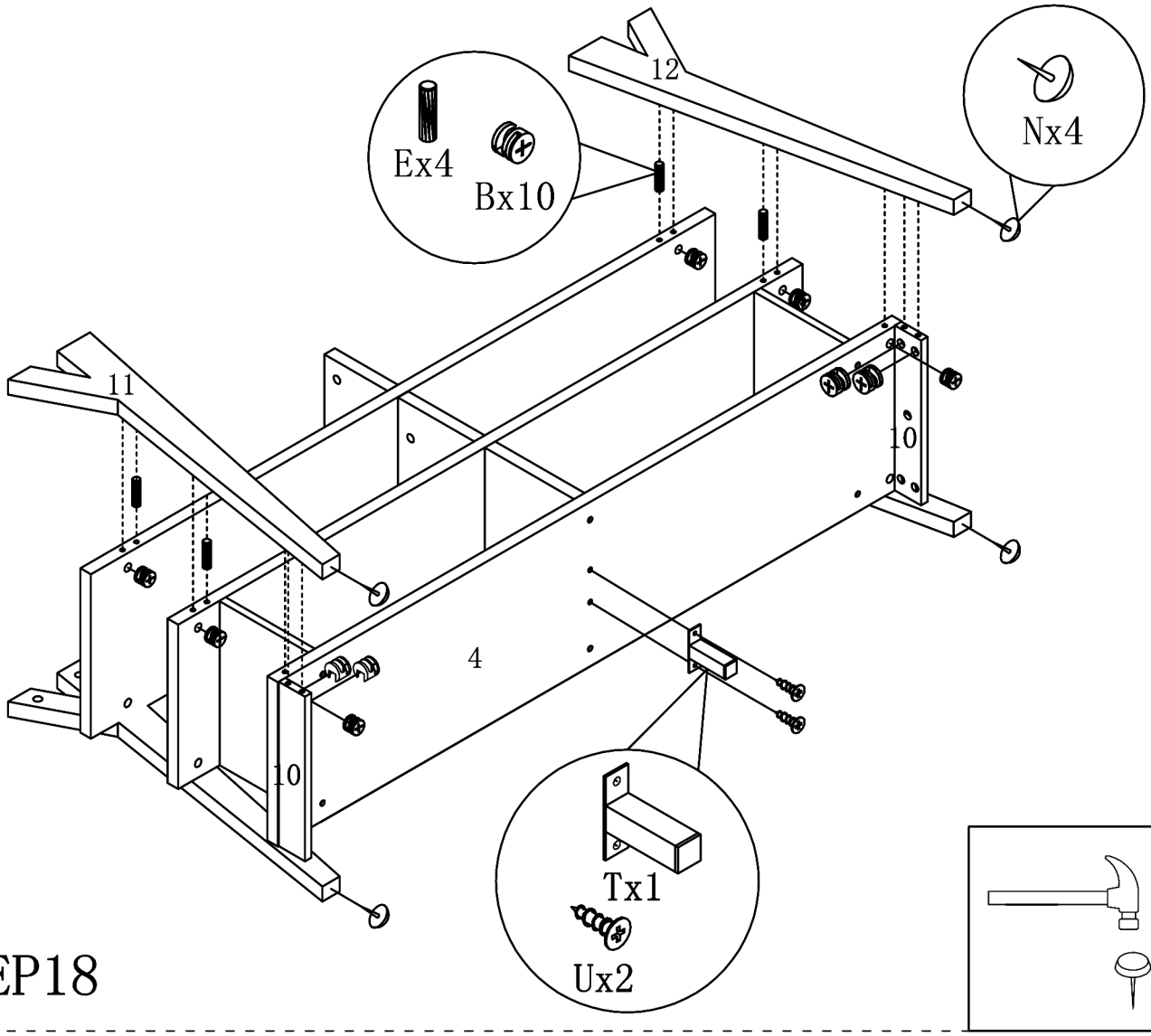

STEP18

STEP19

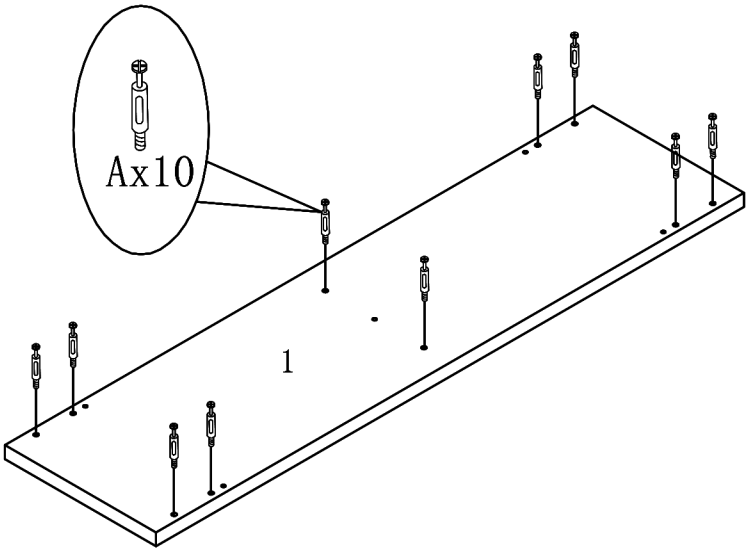

ASSEMBLY INSTRUCTIONS

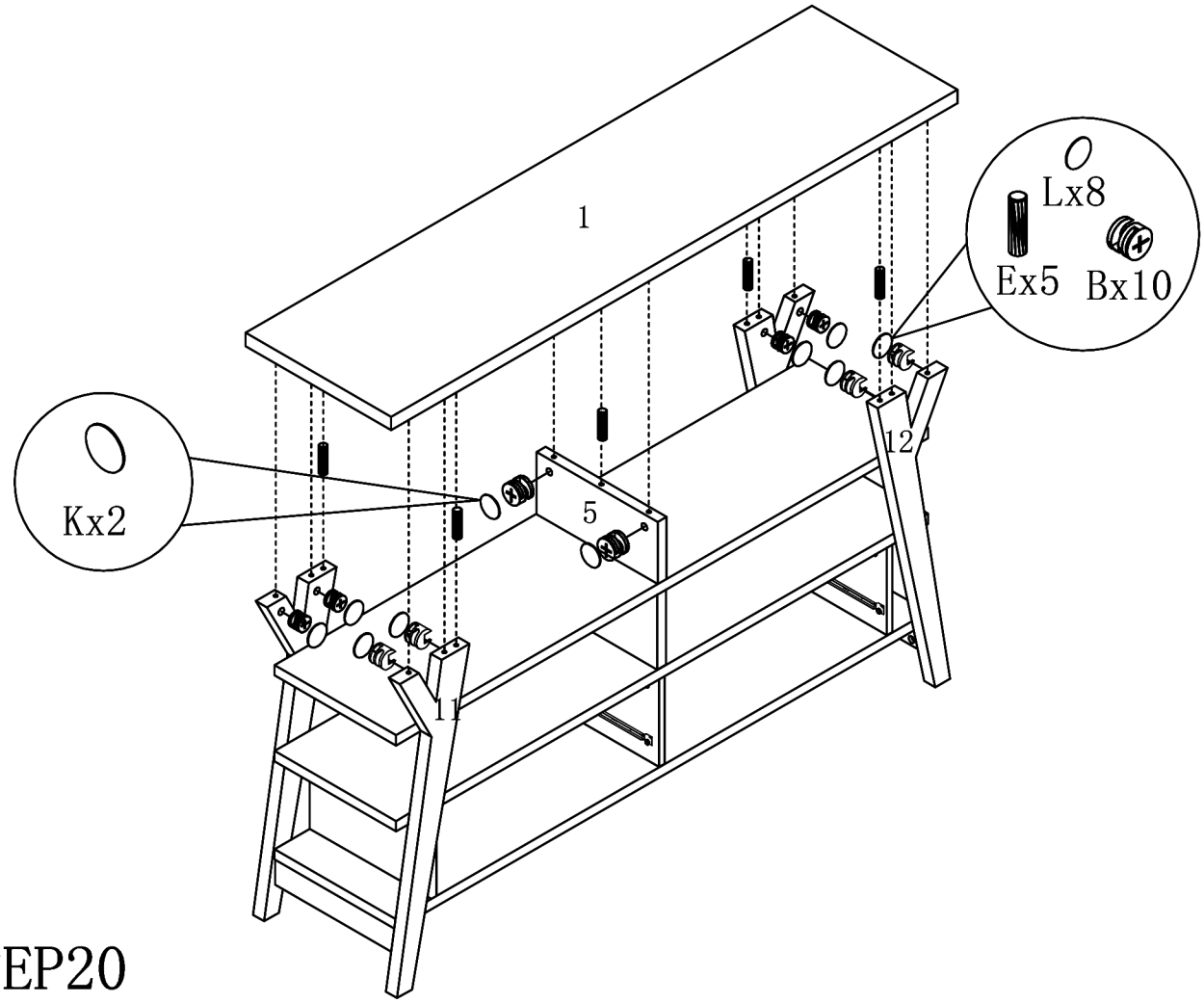

STEP20

STEP21

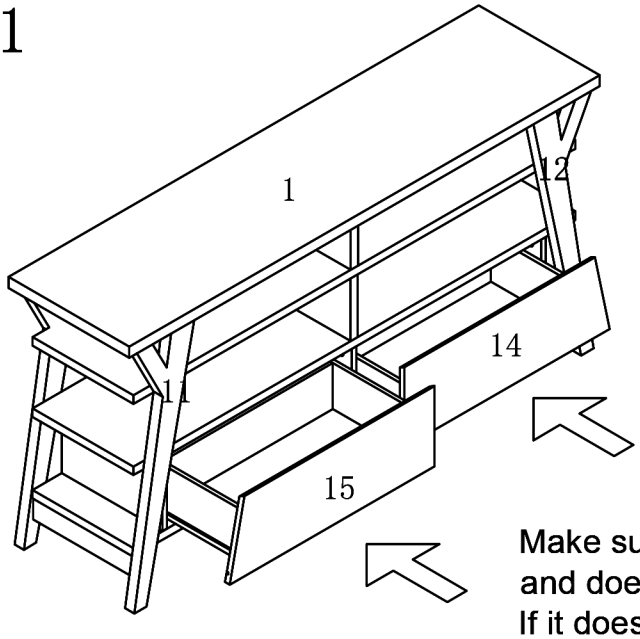

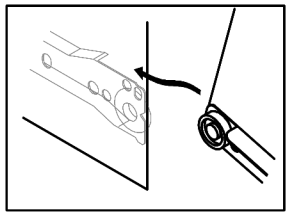

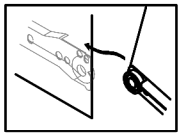

Make sure the unit is rested on a flat surface and does not feel loose or wobbly
If it does,double check that the bolts/screws are secured and properly tightened

ASSEMBLY IS COMPLETED

Anti-Tipping strap Instruction

Hardware List (Included):

Drywall Anchor	1PC
Metal Brackets	2PC
Drywall screw	1PC
Strap	1PC
Flathead Screw	1PC

Tools(Not Included):

Drill & Drill Bit

Light Hammer

Note: Hardware included only compatible with standard drywalls.

STEP 1

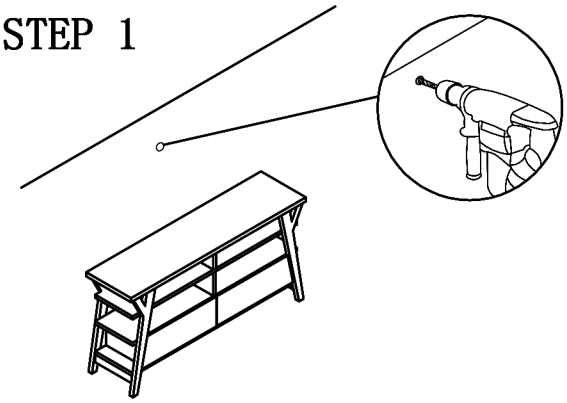

1. Find spot on wall 1″ below top of item.
2. Using a drill bit slightly thinner than anchor ,drill hole into drywall.

STEP 2

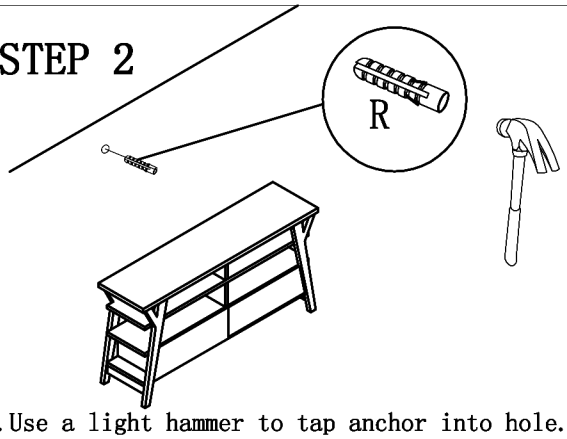

1. Use a light hammer to tap anchor into hole.
2. Anchor should fit snugly. If hole is too small, drill again to increase hole size . Do not force anchor into wall.

STEP 3

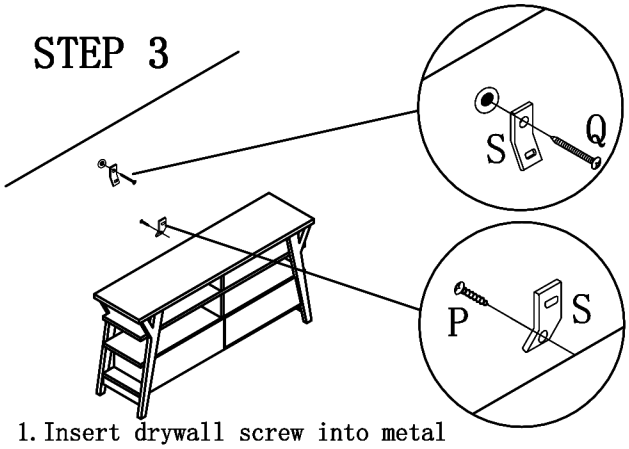

1. Insert drywall screw into metal bracket and into drywall anchor.
2. Insert flathead screw into second metal bracket and into back of item. along top edge.

STEP 4

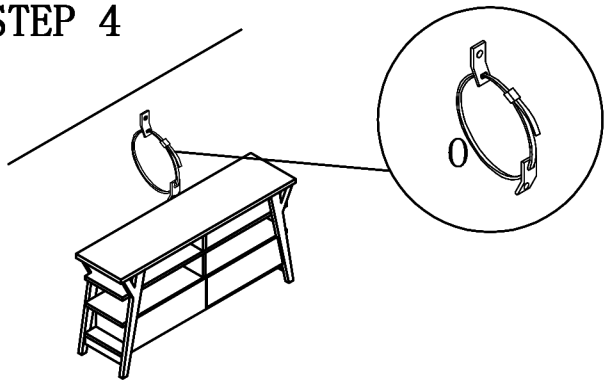

1. Insert strap thru bracket attached to wall. then thru bracket on item , and into head of strap.
2. pull lightly til strap stops.

Assembly is complete.