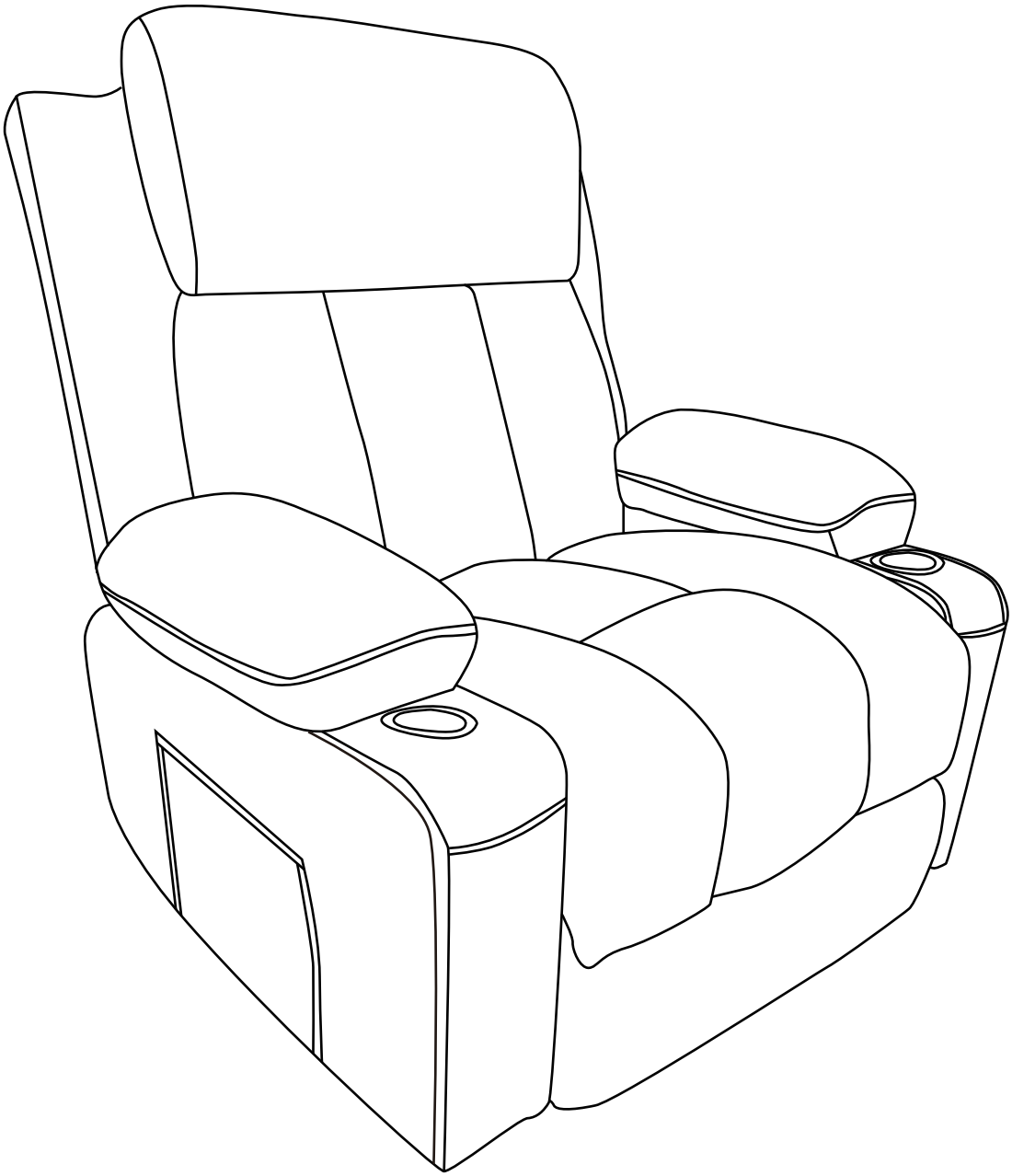

INSTRUCTION MANUAL

ASSEMBLY GUIDE

Congratulations, you now have a new function sofa with massage.

Before enjoy the comfort chair,you have to put it together.This Assembly Guide will take you through the basic assembly process.To make sure your assembly goes smoothly,please follow the assembly instructions, and especially the important safety information.

Also, while it is possible to assemble the chair on your own, having a second person to help you makes it even easier.

Before you begin, please check if there are any missing parts from the package. Should there be any issues, please don't hesitate to drop us an email and we'll help you out ASAP.

PACKAGE LIST

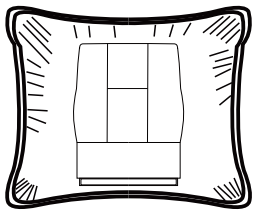

Seat cushion Ⓐ*1

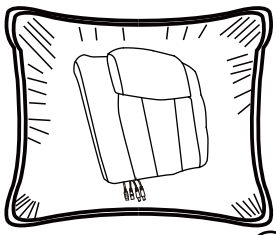

Back Ⓑ*1

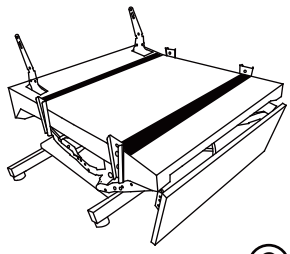

Seat frame Ⓒ*1

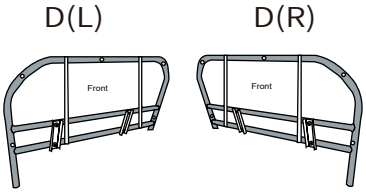

Arm frame Ⓓ*1

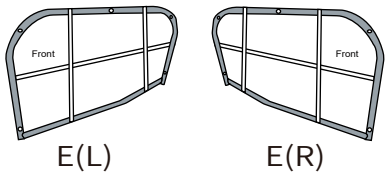

Arm frame Ⓔ*1

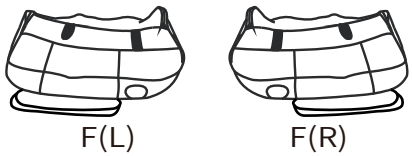

Armrest cover Ⓕ*1

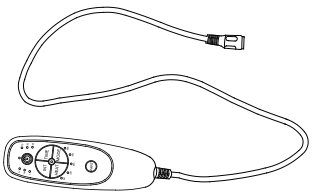

Massager remote control board Ⓖ*1

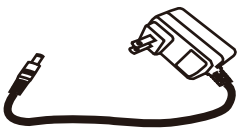

Massager power supply Ⓗ*1

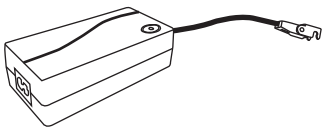

Massager power supply Ⓘ*1

Power line Ⓧ*1

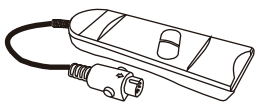

Black and white key controller Ⓨ*1

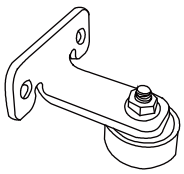

Foot support frame Ⓙ*2

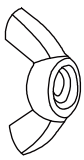

M6 claw nut Ⓚ*4

Screw Ⓛ*5

Connecting tubes Ⓜ*10

PACKAGE LIST

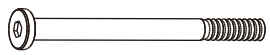

Long screw Ⓝ*10

Spanner Ⓞ*1

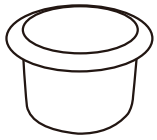

Cup holder Ⓟ*2

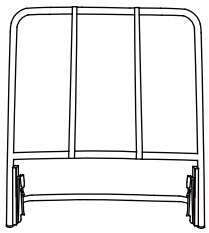

Back frame Ⓣ*1

Spare Ⓢ*2

Tip: Flip the seat frame over with the footrest facing upwards,Pull the footrest with your hand，Then remove the accessory box and seat cushion from the frame.

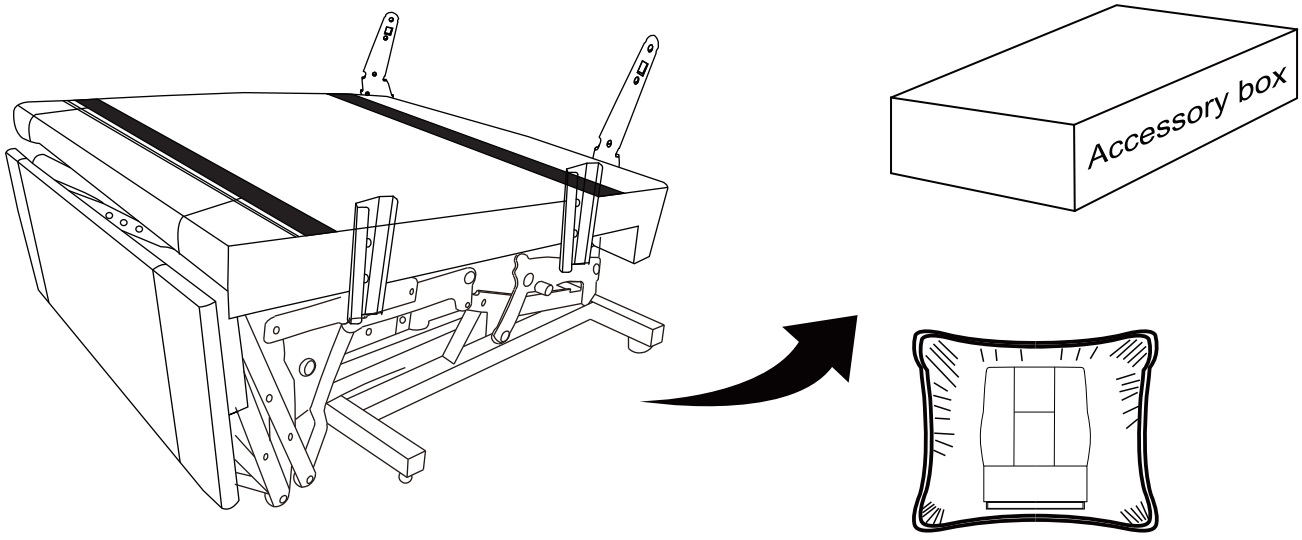

Under the frame

ASSEMBLY INSTRUCTION

STEP 1: Use spanner O and screw N to pin through the inner iron frame D and the armrest pillar M to the outer frame E of the armrest. Tight all screws, please pay attention to distinguish the front and back of the armrest frame.

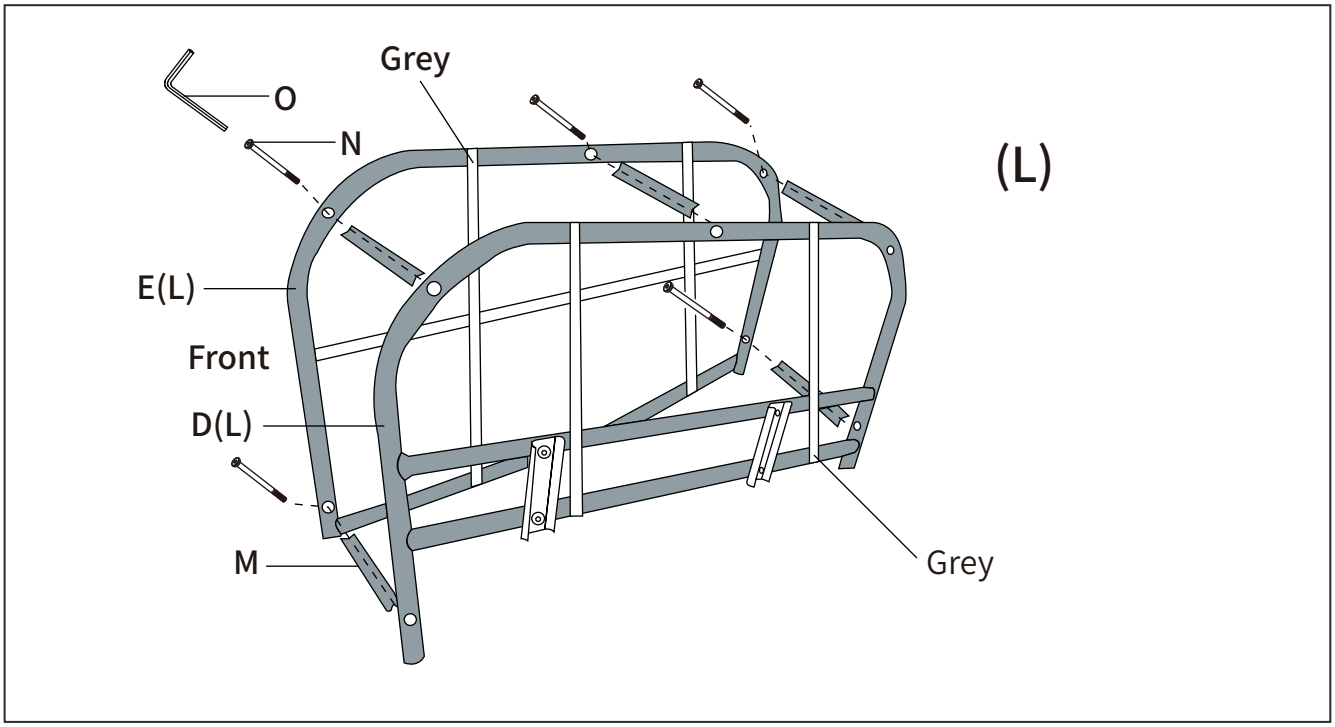

STEP 2: Align the armrest cover to armrest-assembled iron frame in sequence of left and right, back and forward. so that the cloth cover hole is aligned with the insert hole. Pull the zipper after all is OK.

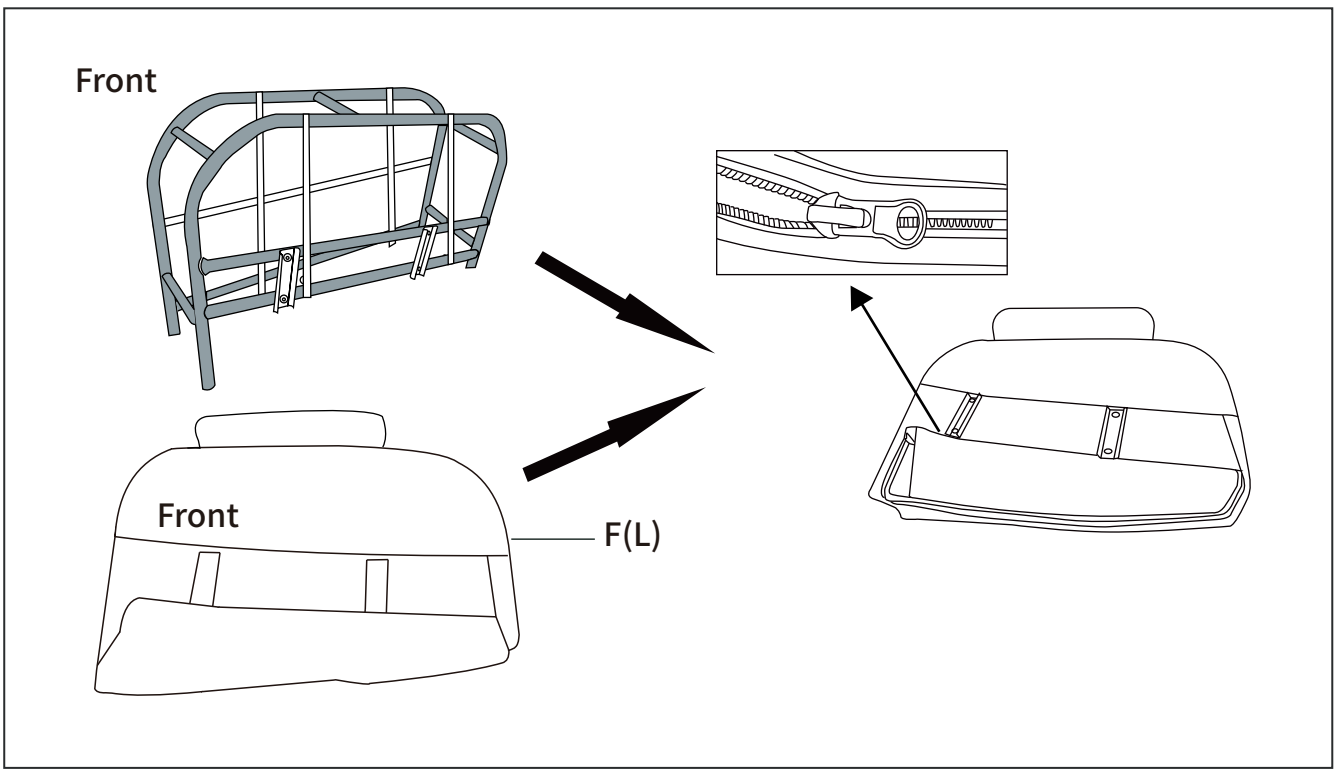

STEP 3: Repeat Step 1.

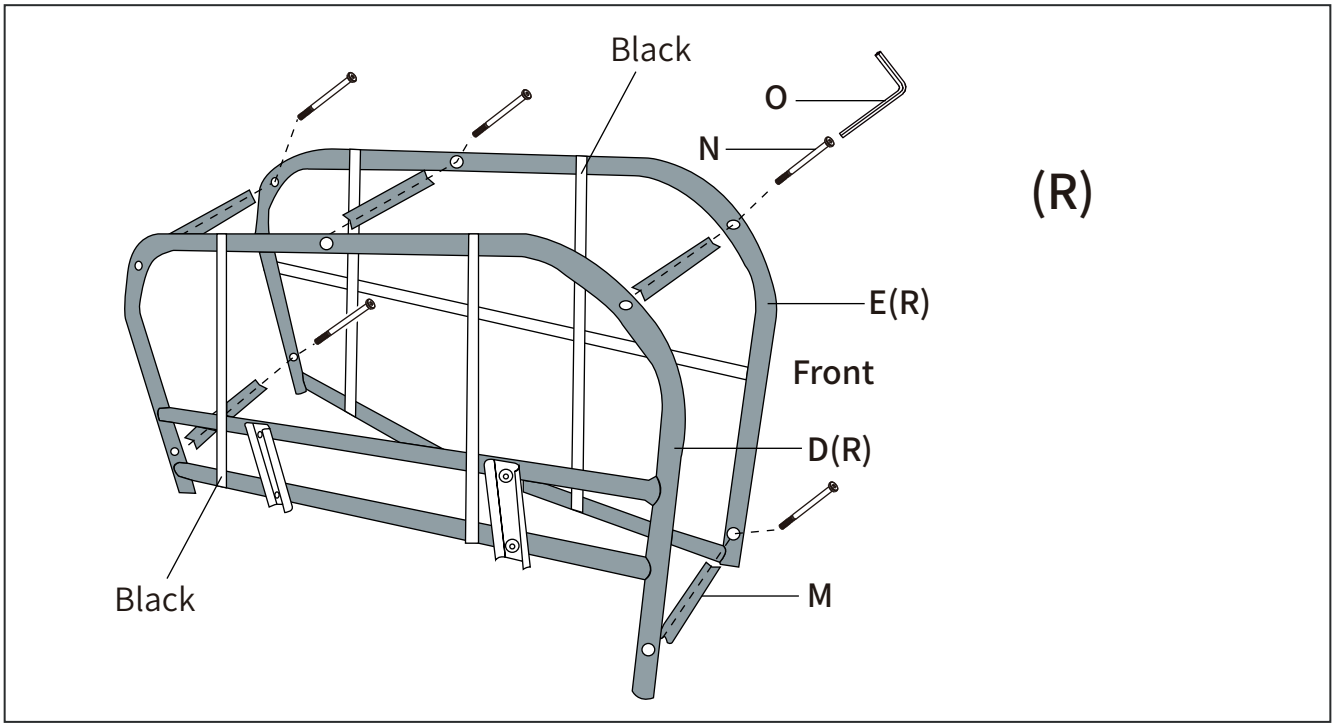

STEP 4: Repeat Step 2.

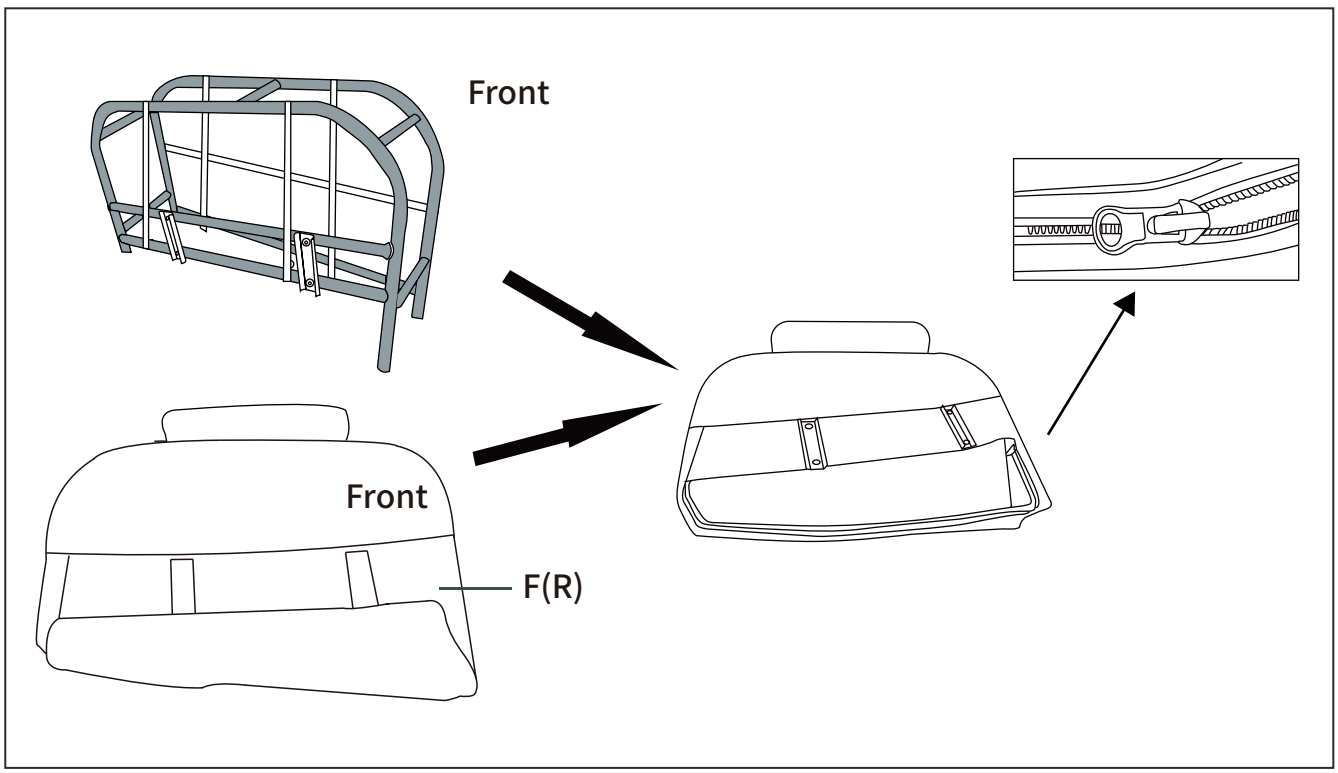

STEP 5: Place the cup holder into the groove.

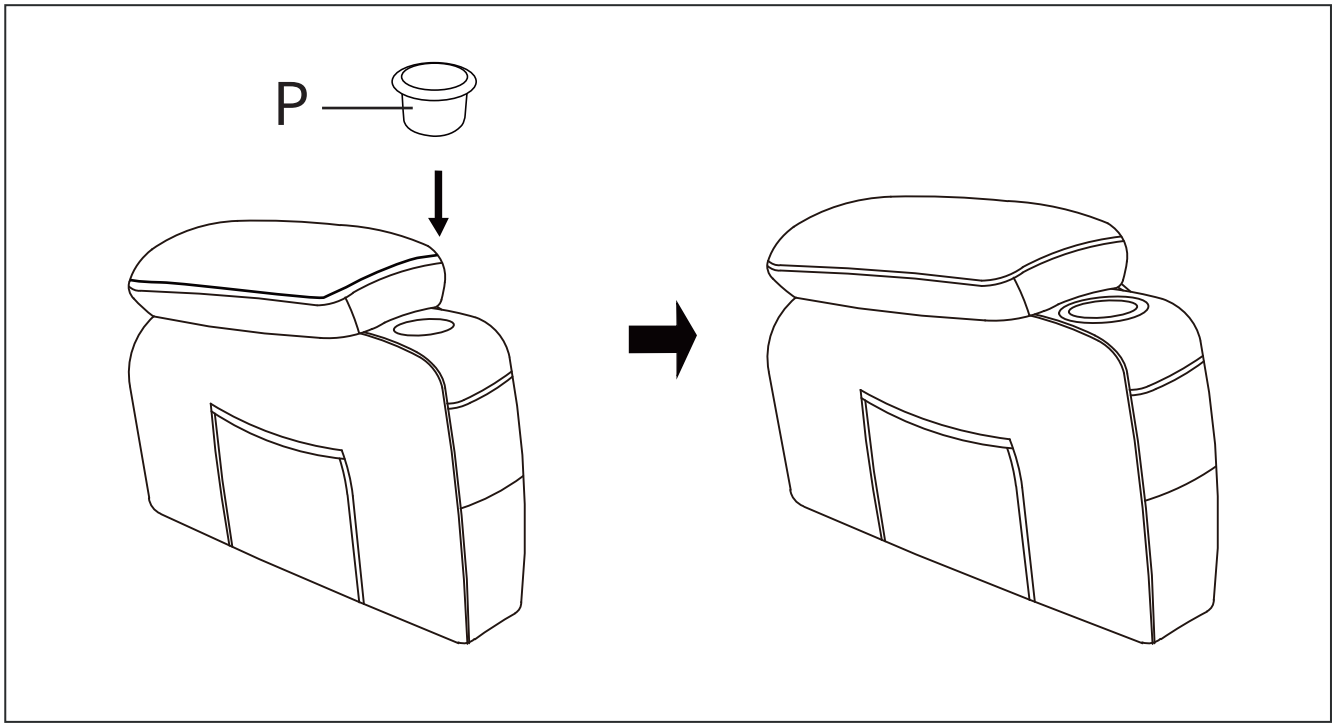

STEP 6: Insert arms so that they can fit into the seat,you will hear a “click"when they are engaged.

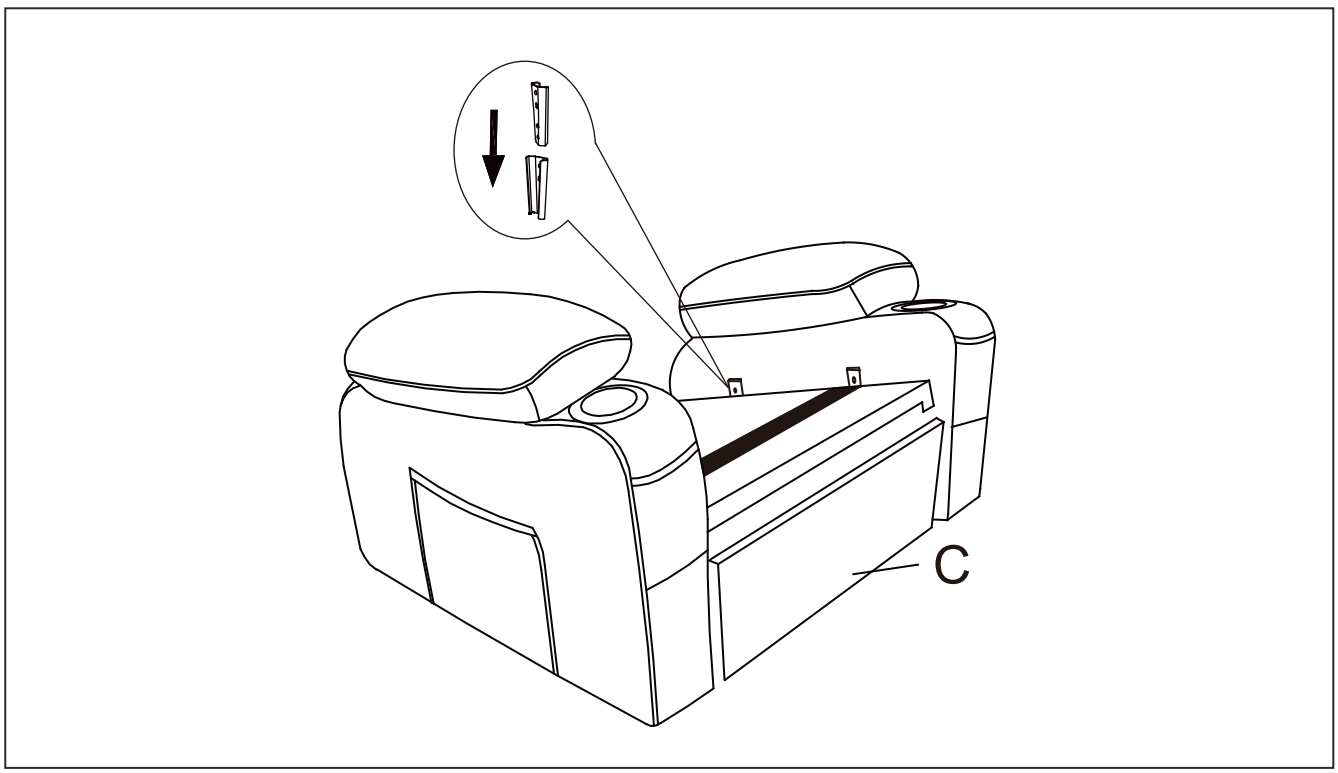

STEP 7: Connect the hand controller (Y),then connect the power adapter (I) to the motor cable, and lock locking cables, finally, connect the power cord (X) to the power adapter (I),spread out the leg rest using the controller.

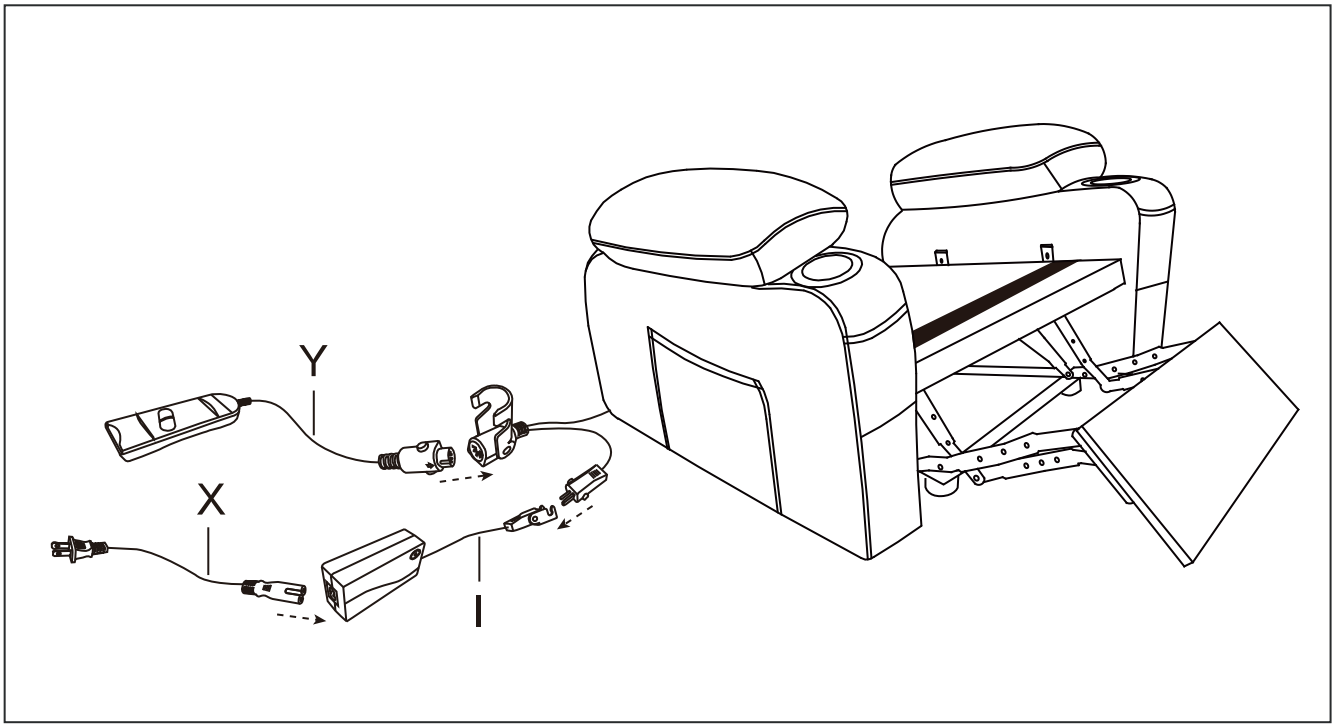

STEP 8: Open the compression bag and remove the seat cushion.

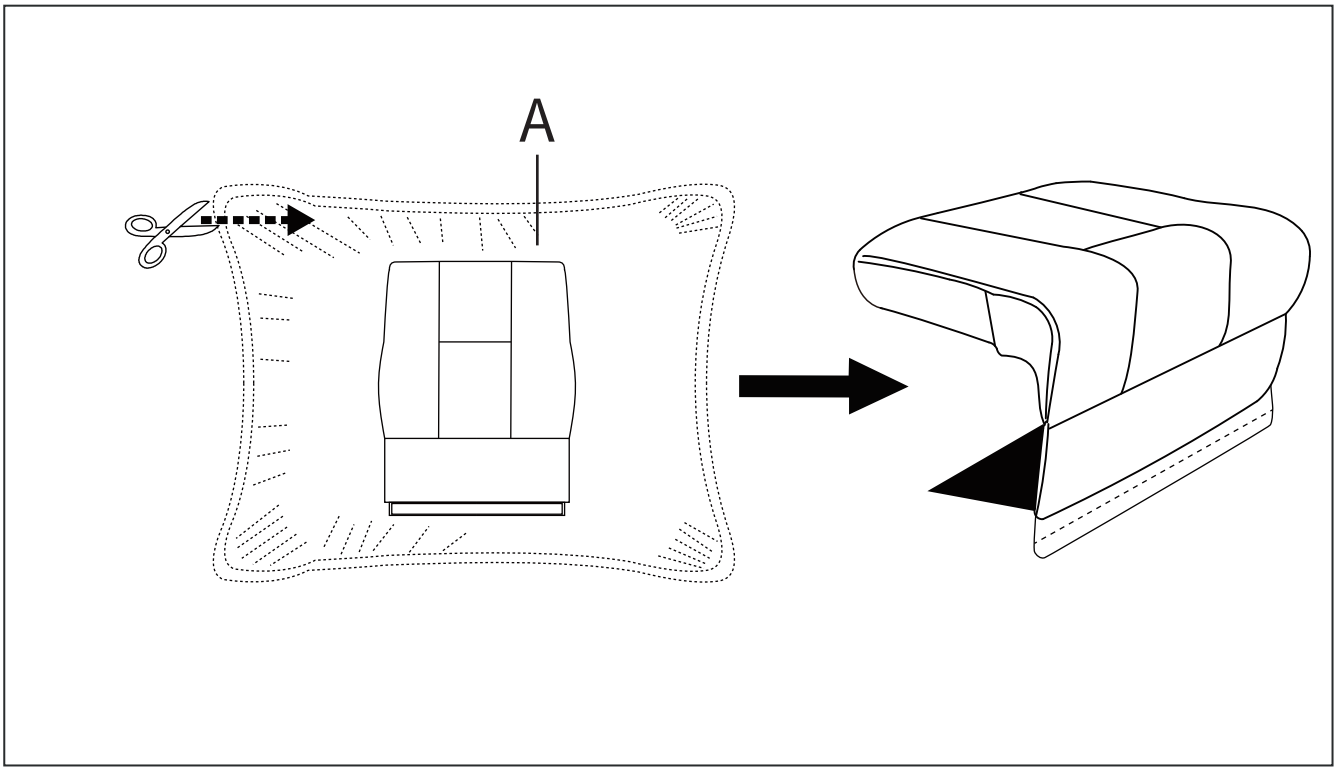

STEP 9: Open the rack.The velcro on the rack sticks to the bottom of the saddle, and the cool cloth at the back of the saddle goes through the frame pedal and sticks to velcro at the front of the saddle.(Note: The cushion can be adjusted repeatedly to avoid improper pasting affecting the sitting feeling)

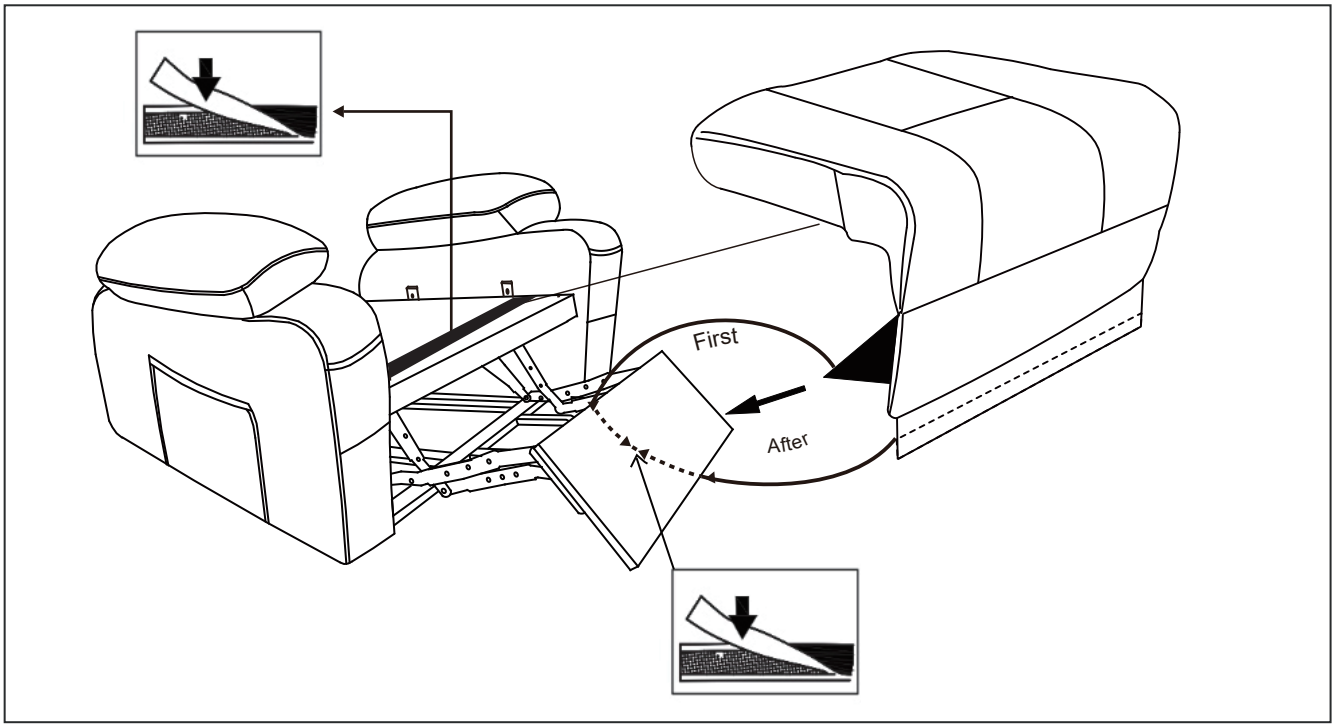

STEP 10: Open the compression bag and remove the back.

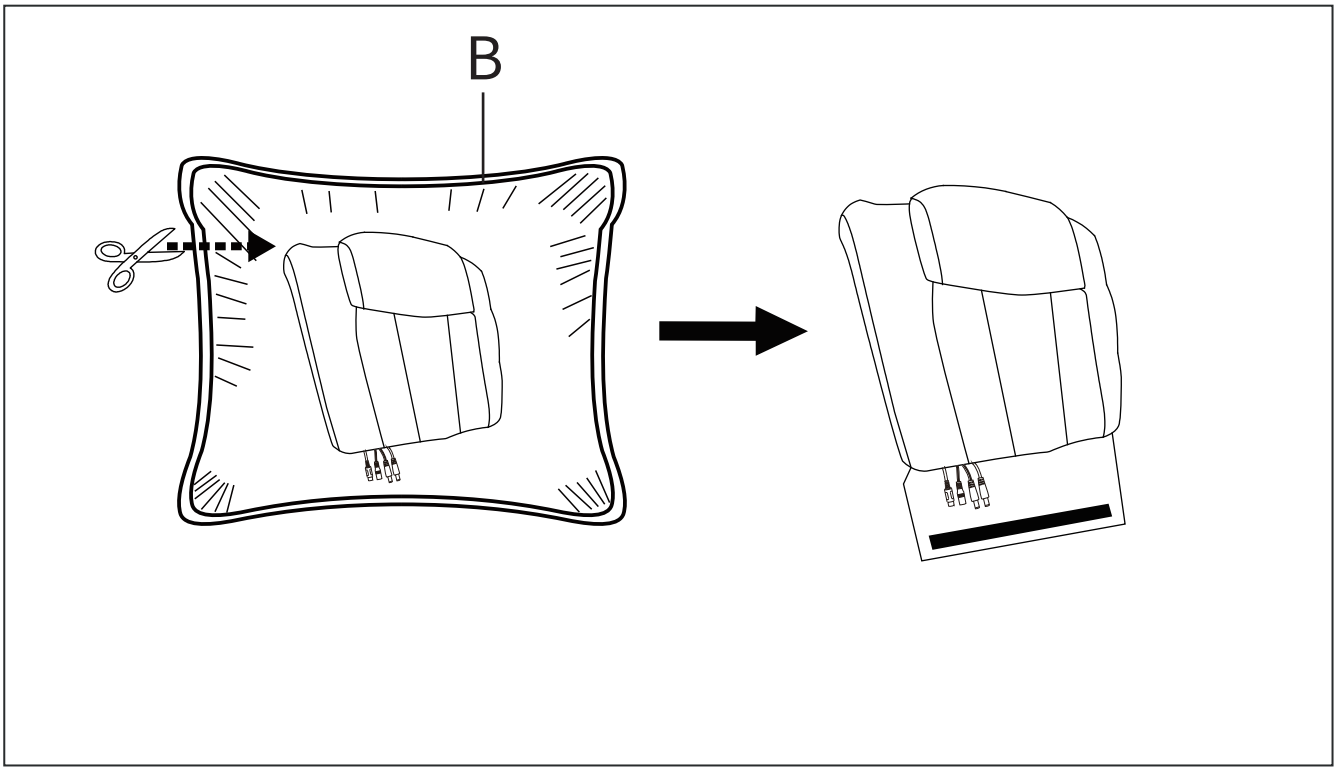

STEP 11: Zip the backpack and back frame, and then connect the backpack and back frame with velcro.Gently pat them.

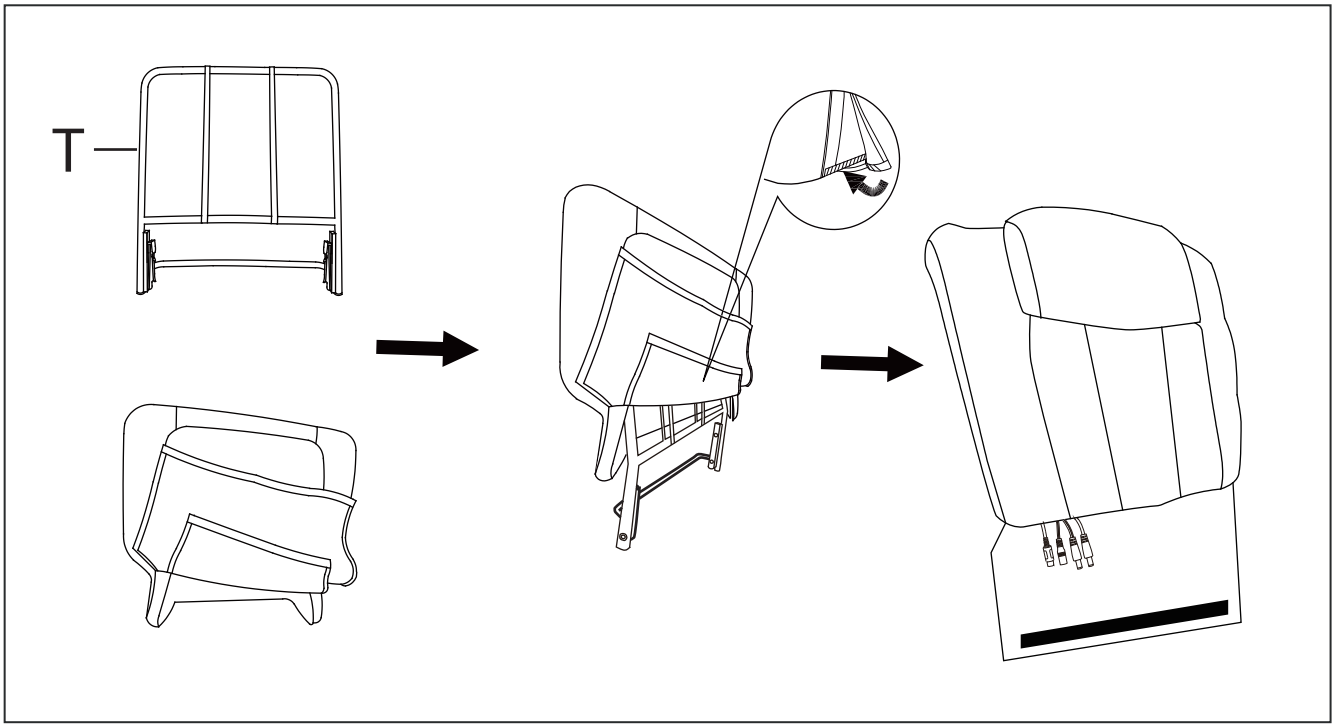

STEP 12: Plug the back pad into the seat frame, and then connect the massager line white and white, red and red, black and power lines, and the massage line with the hand controller.

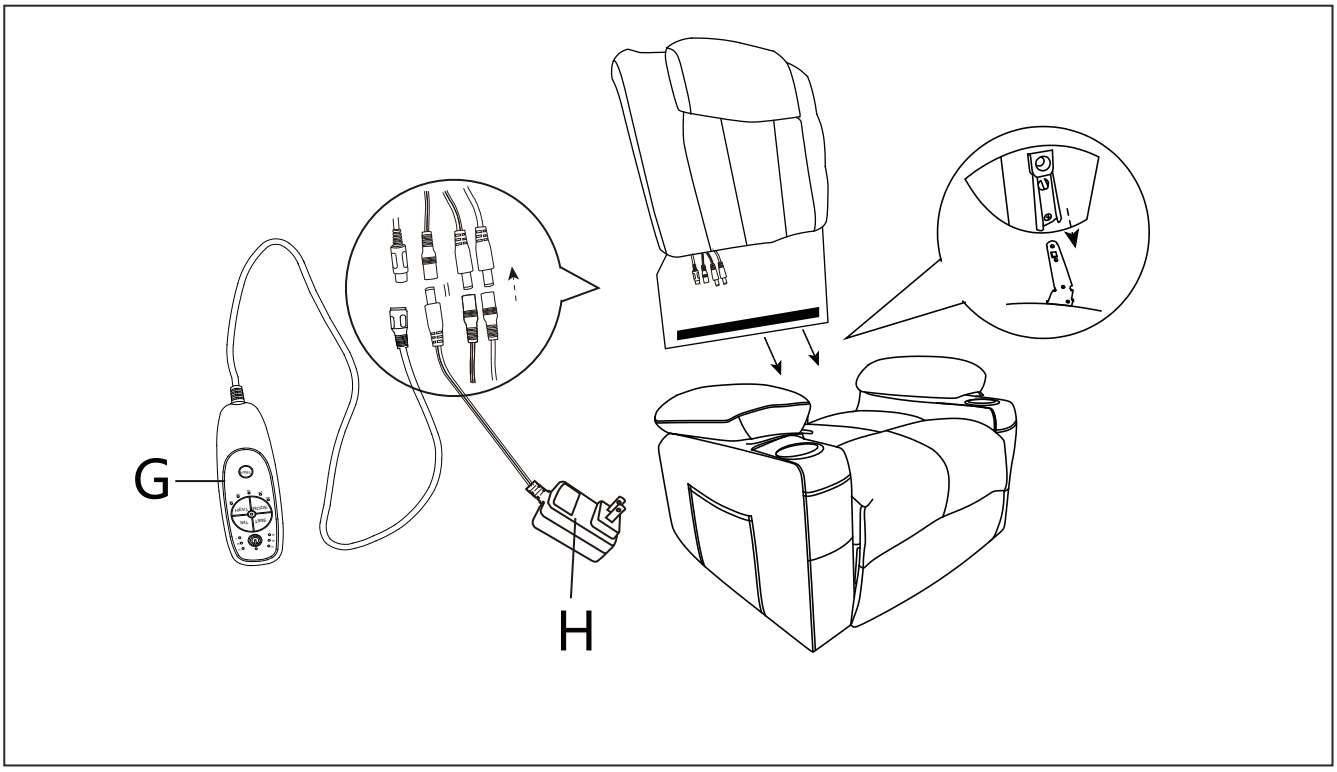

ASSEMBLY INSTRUCTION

TIPS:If there are any problems during the installation process, please promptly seek assistance from the customer service team.(Key Direction: During installation, ensure that the protruding side of the crossbar faces the same direction as the front of the backrest.)

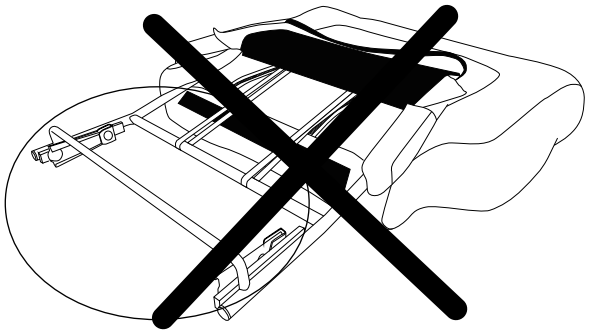

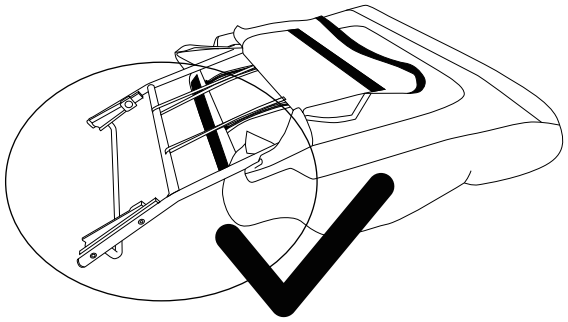

the protruding side of the crossbar faces
the same direction as the front of the backrest

Wrap the rear cover cloth around the iron pipe crossbar
and secure with Velcro.

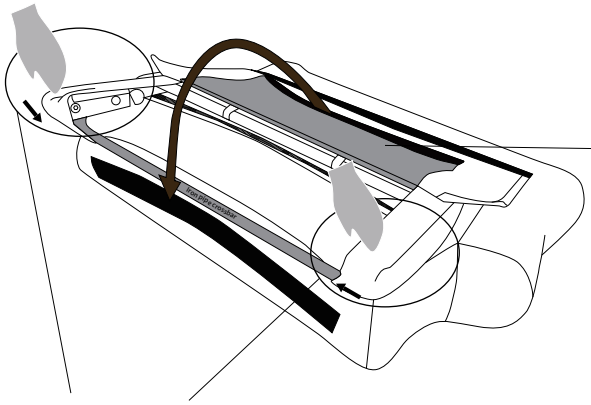

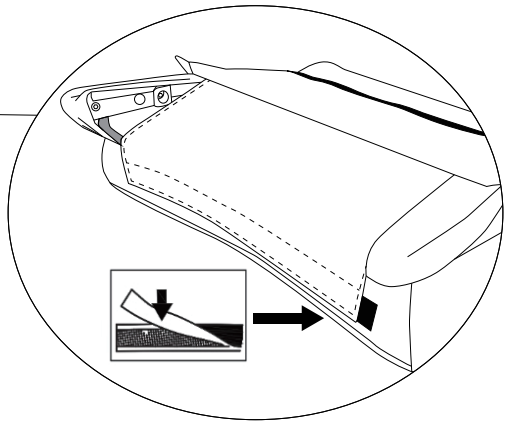

Attach the side flaps of the soft back
cover to the sides of the back frame.

STEP 13: Turn the screw L through the support frame J, seat cushion frame successively, and then lock it with the nut K and the screw L.

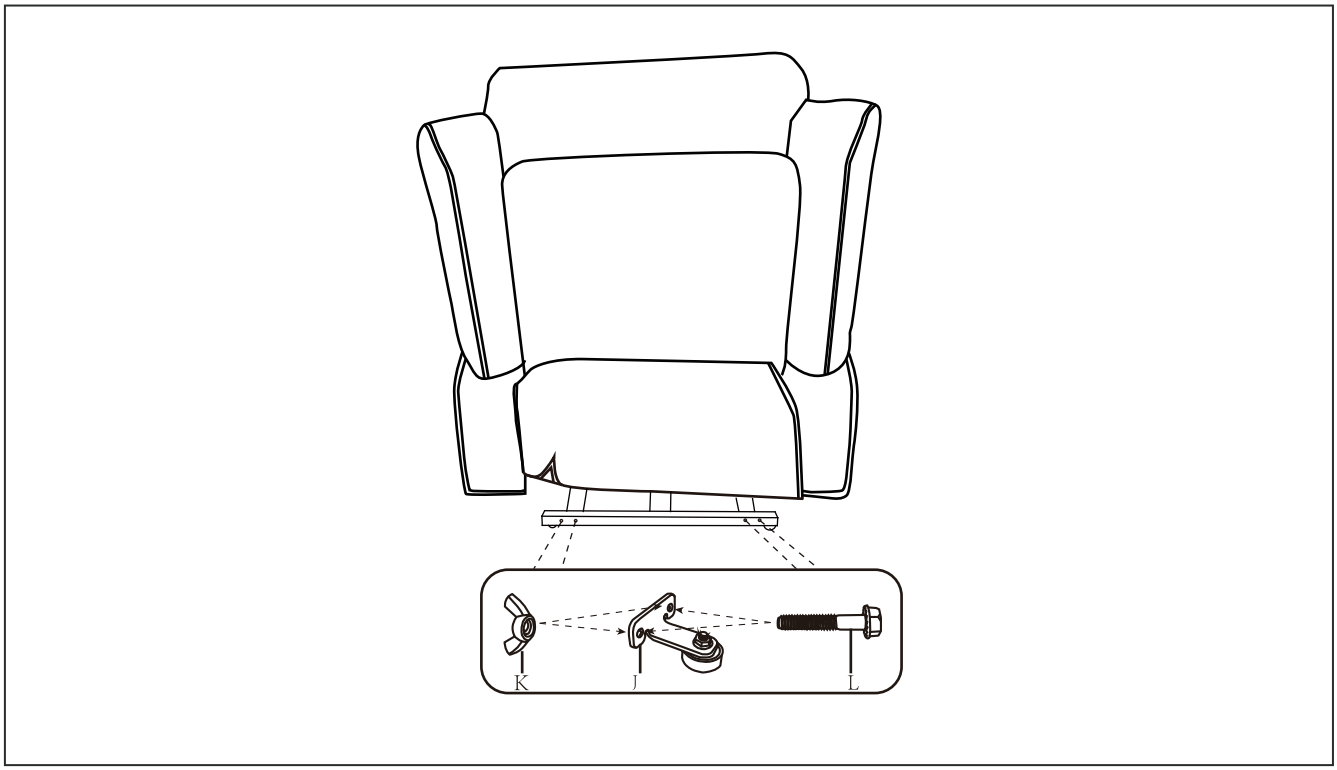

STEP 14: Stick the velcro from the back frame to the seat frame.

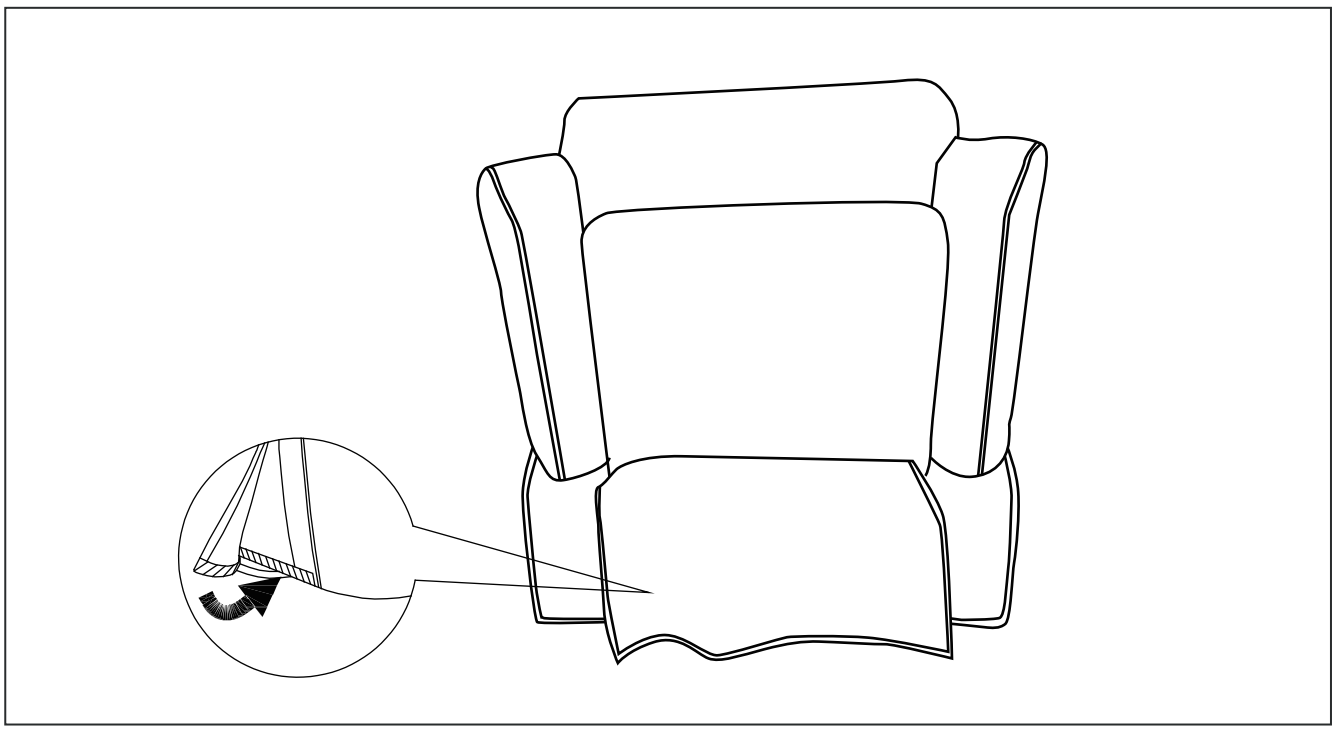

OPERATING INSTRUCTION

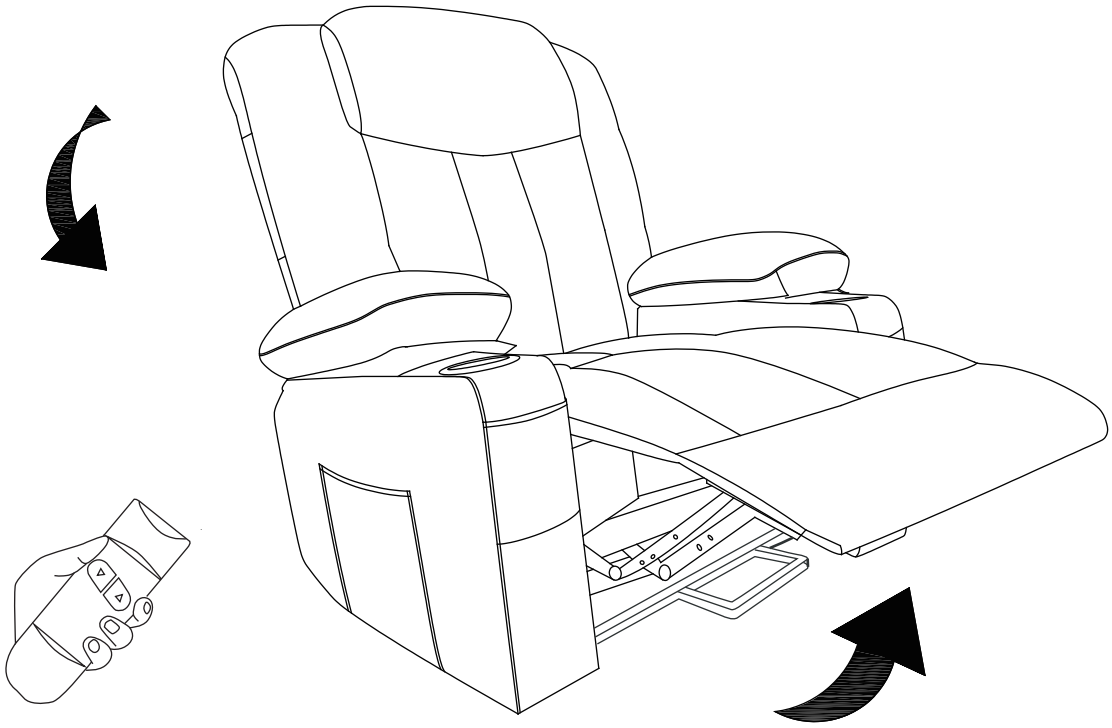

Press the button to expand the sofa

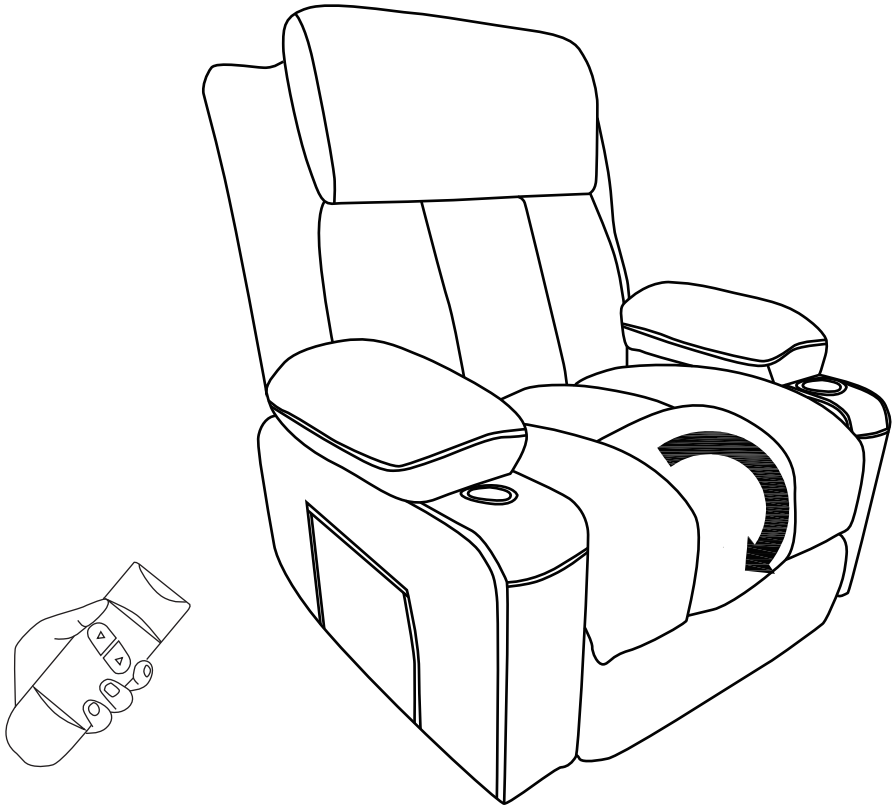

Press the button to pull the sofa back

OPERATING INSTRUCTION

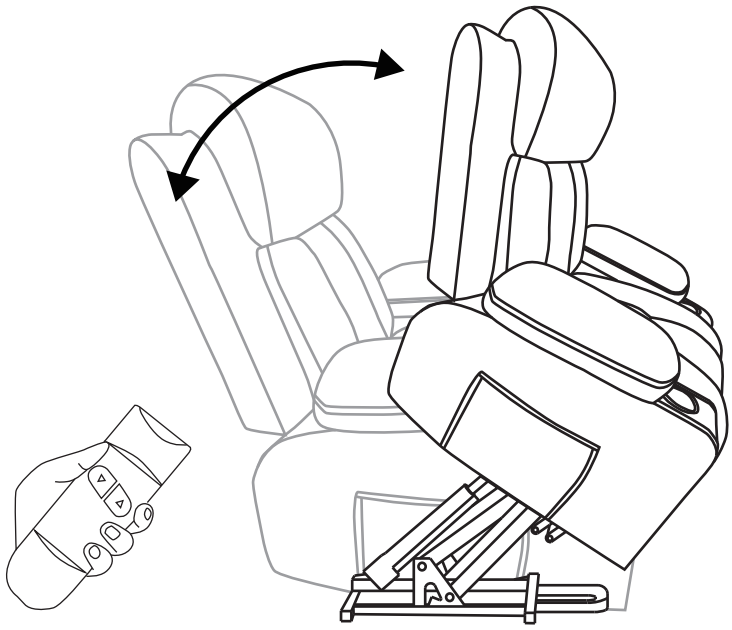

Raise the rack for easy standing

Congratulations!You've assembled

Your Sofa!

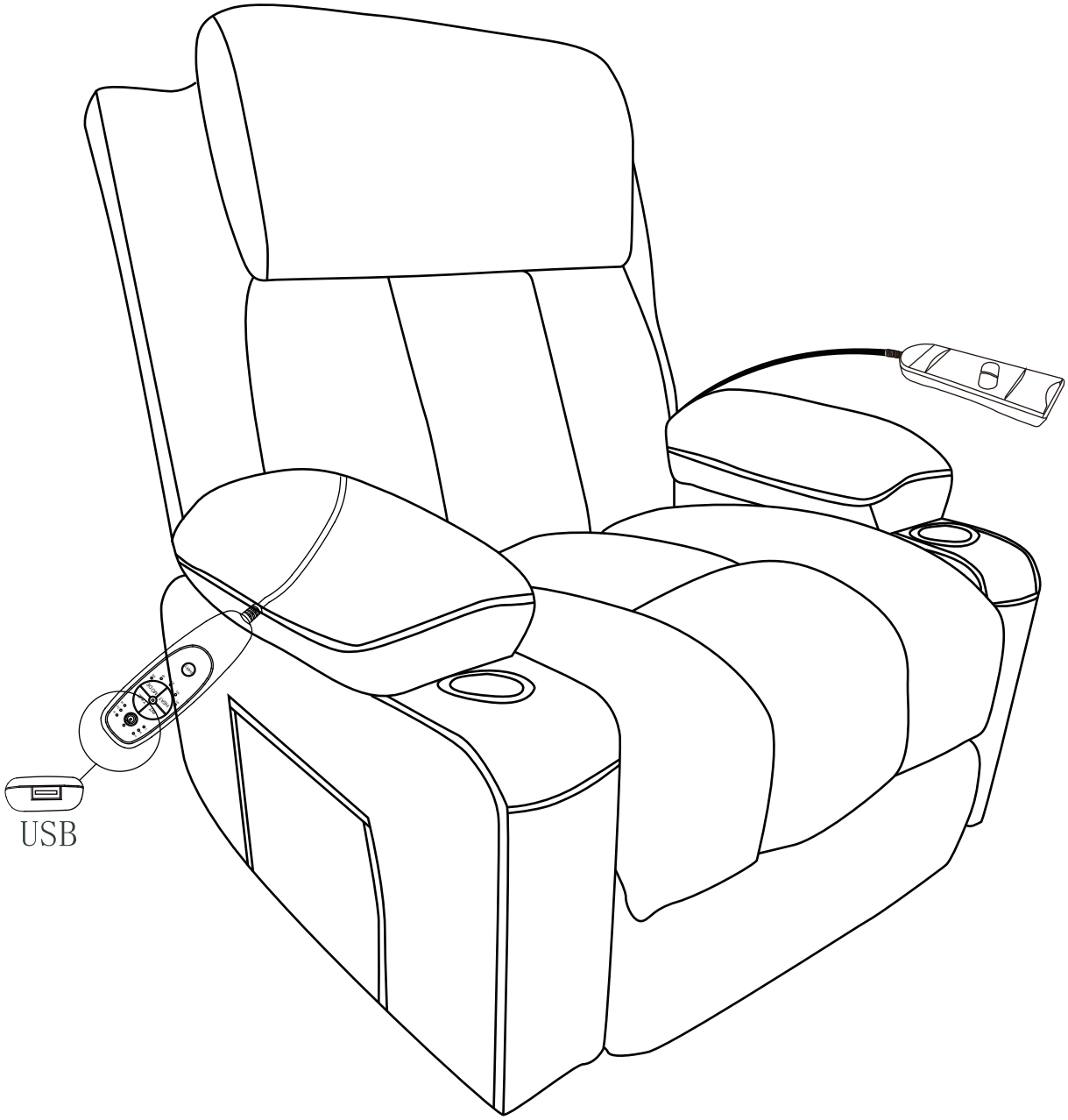

ELECTRIC LIFTING & RECLINING

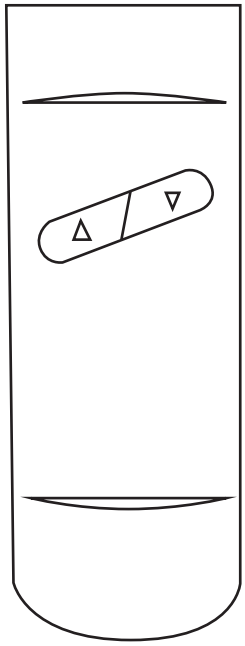

Operation Instructions

- Plug the direct current end of the cord into the AC Adapter outlet, then insert the AC adapter plug into a wall outlet for power.
- Press the button ▲ to recline the chair back and footrest.
- Press the button ▼ to return the chair back and footrest to their original position. Push the button ▼ a second time to lift the entire chair.
- Press the button ▲ to lower the chair and return it to the original position.

MASSAGE CHAIR

READ ALL INSTRUCTIONS
BEFORE USING THE ITEM

REMOTE CONTROL

Function of remote

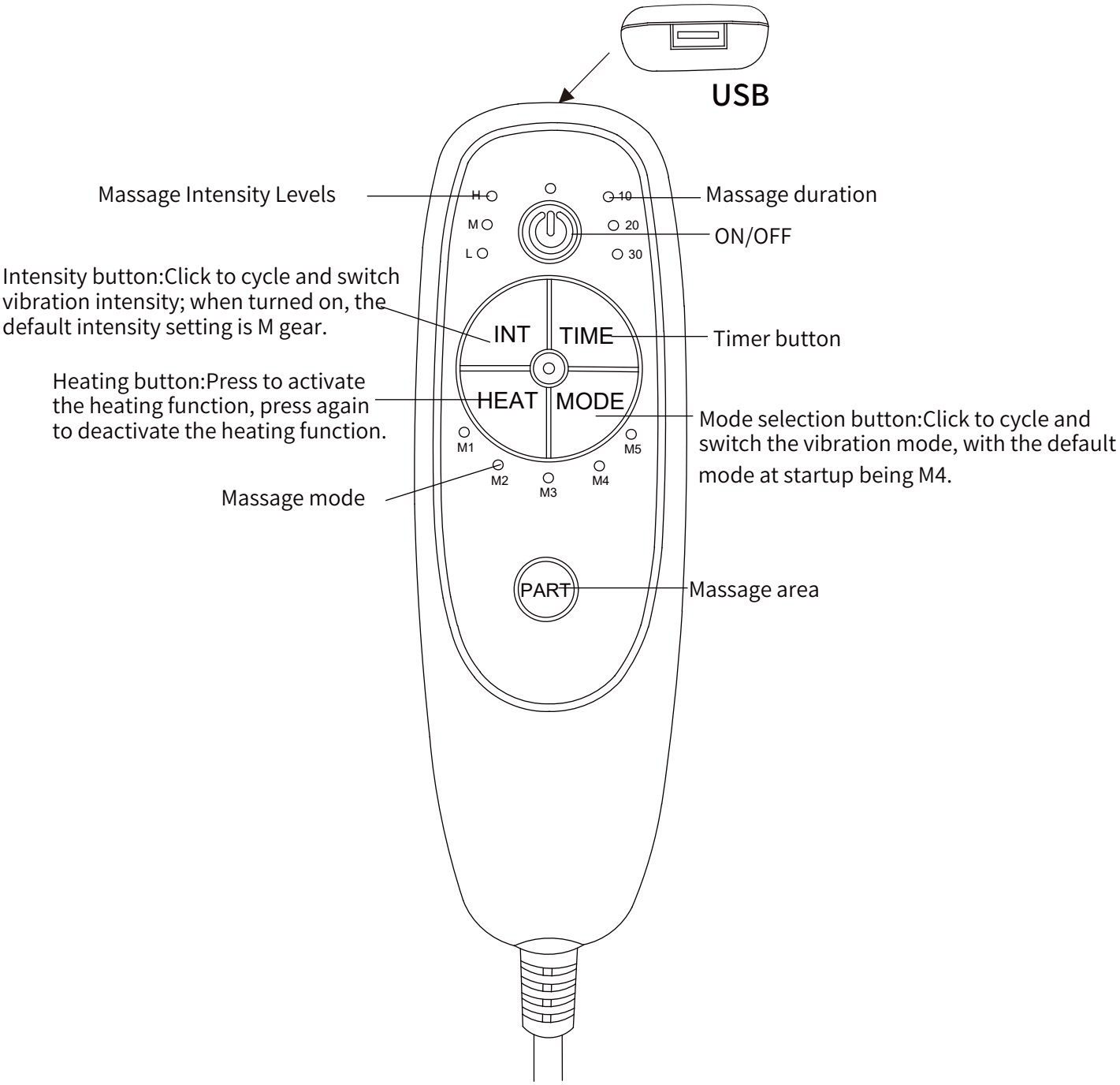

Ⅰ、Specifications of power adapter

Power on in standby state. The user can realize the function through the hand controller controler control

Input:AC100-240V,50HZ/60HZ;Output:DC12V2A.

Ⅱ、Product features

1、Motor vibration at position 8

2、1-way heating plate

3、Three-segment timing, the default timing shutdown time is 10Min

4、3rd gear vibration intensity

5、5 vibration modes

6、Support USB charging 5V 2.0A

Ⅲ、Function details

1、ON/OFF：Switch on and off

2、TIME：Positioning cycle by massage time (10/20/30 min) , Boot default 10min

3、MODE：Tap the five vibration modes to switch（M1/M2/M3/M4/M5）,The default startup mode is M4

4、INT：Switch point by vibration intensity（H/M/L）,Boot the default M file (medium Files)

5、HEAT：Click heating switch circulation

6、PART：Vibration positioning key , Boot the default vibration is full on, tap to switch to a single part vibration

7、Strength indicator

8、Time indicator

9、Mode indicator

10、USB charging port

Warnings

1.Sit down in the chair gently. To avoid tipping over, do not throw yourself into the chair. Move the chair into the reclining position slowly, making sure that no children or pets are in close proximity. Do not allow children to play on or around the chair, particularly when it is in an open position.
2.Close the recliner completely before getting out of it.
3.Never sit on the footrest when it is open, even if it is a child.
4.To eliminate the risk of tipping over, do not sit on the arms or footrest of the chair.
5.This chair is designed to be used by 1 adult at a time.
6.Please forbid people with the following ailments from using this sofa: Those people with severe symptoms of heart disease, high blood pressure, cerebral thrombosis and others who are sensitive to heat or completely insensitive to heat, those with brittle bones or have issues with waist support pregnant women, children and others where it has been determined they are not suitable to use this product under the guidance of doctors.
7.To fully recline the sofa, ensure the sofa well, you need to put the sofa at least 19 inches away from the wall or any other obstacle.
8.Product cannot touch water, fire, etc. Product can also not come in contact with sharp objects (knives, nails, etc.)

Maintenance Manual Instructions

1.To avoid dropping, you should carry the sofa carefully.
2.If you find dirt and or stains on the chair, spray the sofa with a sofa specific cleaner then use a sponge or cloth to wipe the dirt away. Do not use water, soapy water or cleaner with waxed wooden areas. Take care to wipe the sofa carefully and gently.
3.Do not put the sofa in an area with direct sunlight and do not put the sofa directly in front of an air conditioner, this will fade the upholstery and make it brittle.

How to Disassemble
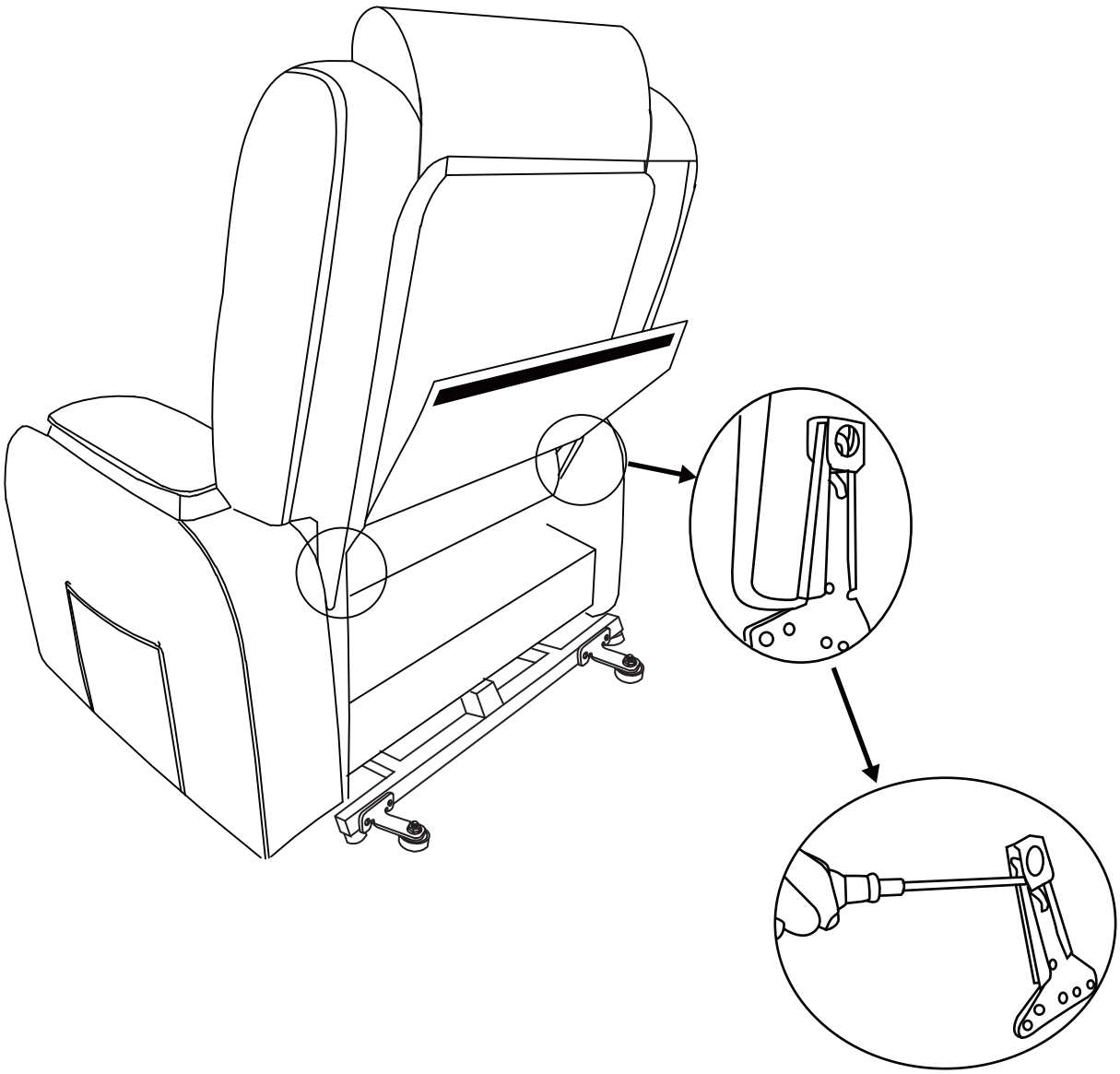
Please find a strong tool to prod the small piece of metal grooves, then the backrest will be pulled out .The tool is not included.