Assembly Instruction

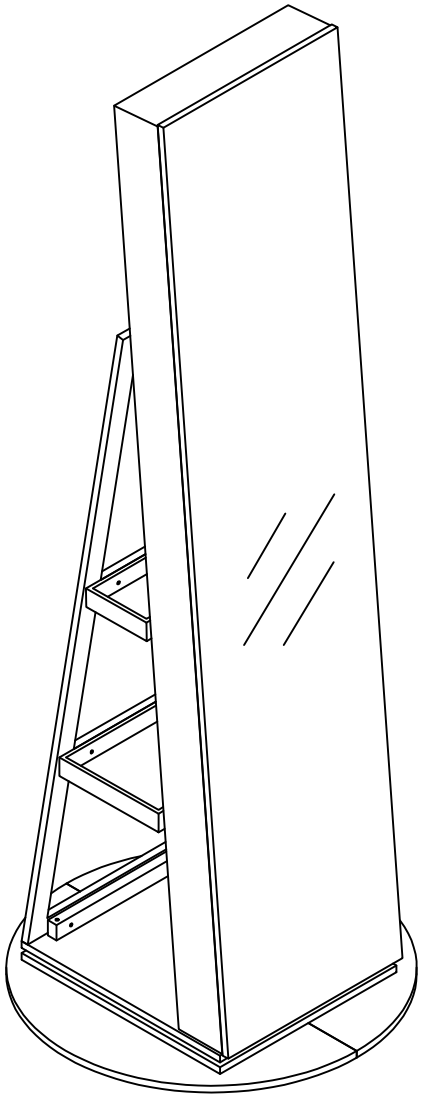

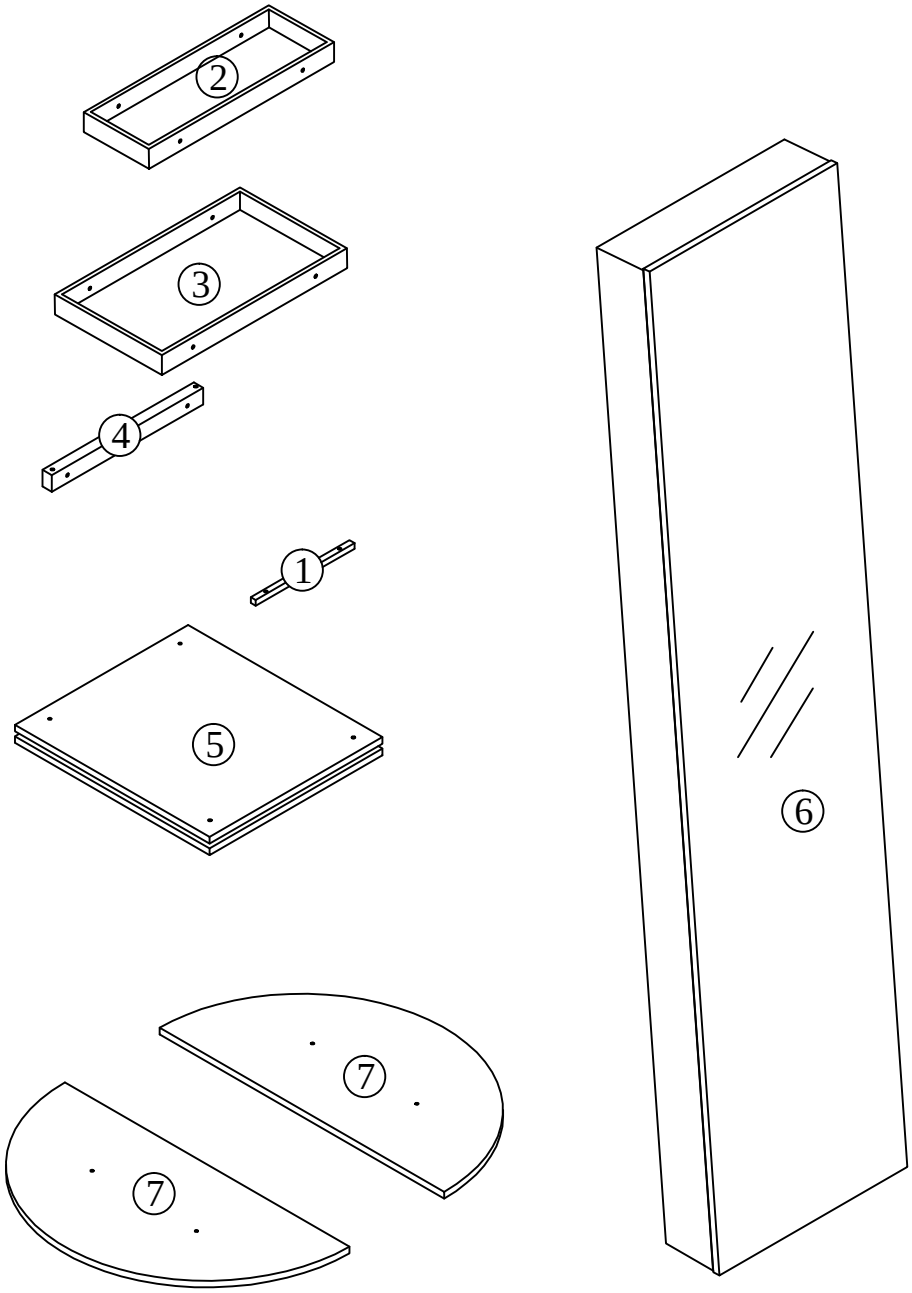

A	x 2
	
Φ3X18mm	

B	x 4
	

C	x 4
	

D	x 1
	

E	x 6
	
Φ6X30mm	

F	x 2
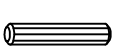	
Φ6X30mm	

G	x 4
	
Φ6X25mm	

H	x 8
	

I	x 1
	

1

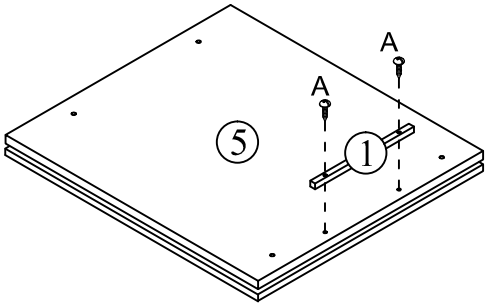

2

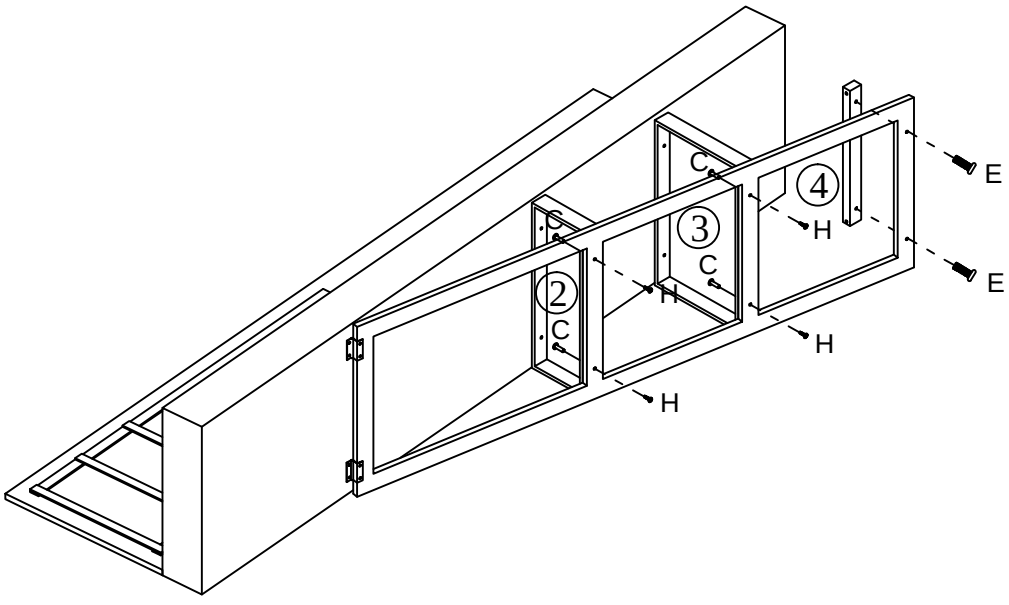

3

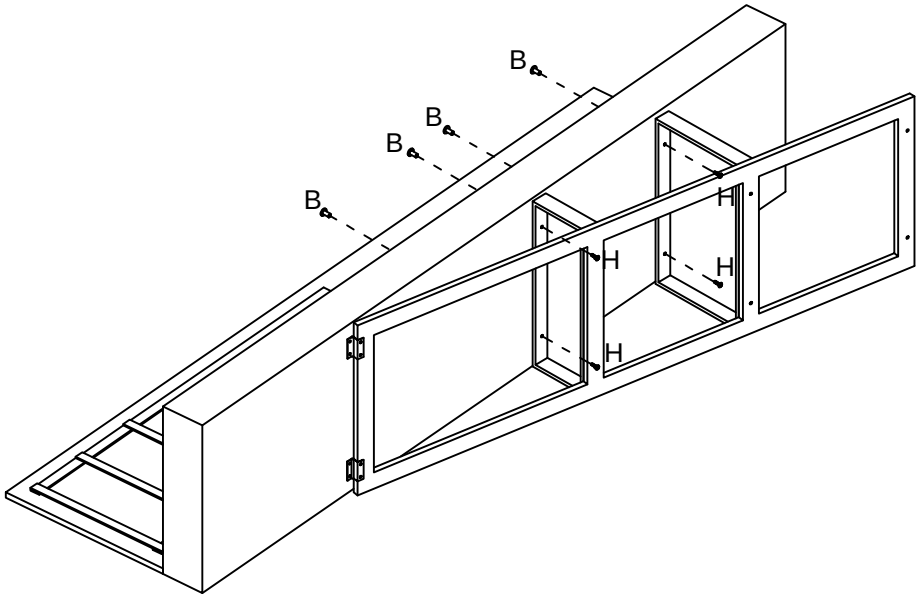

4

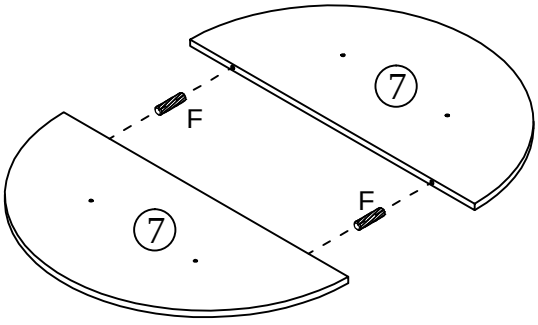

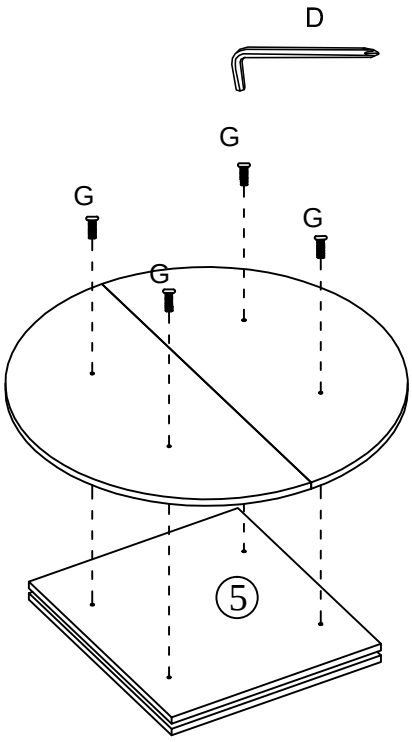

5

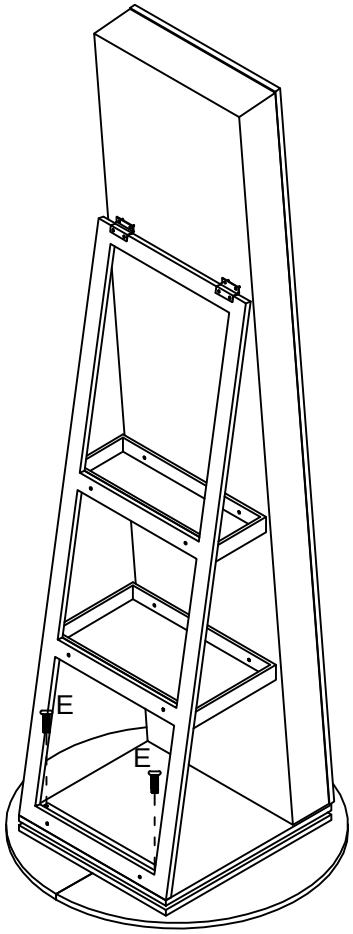

6

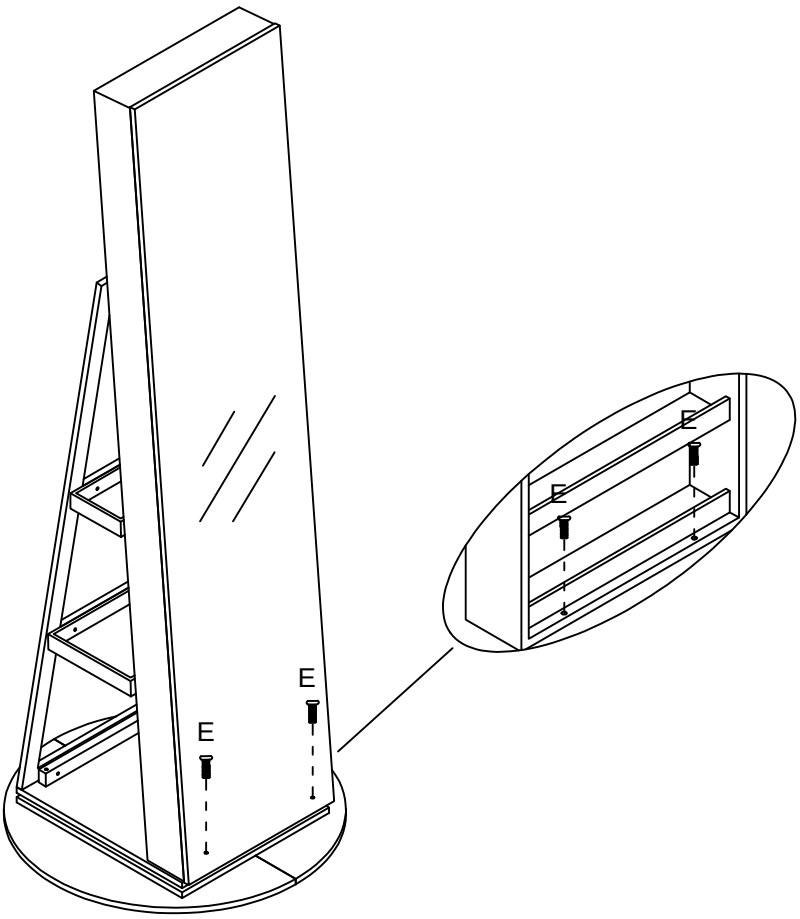

7

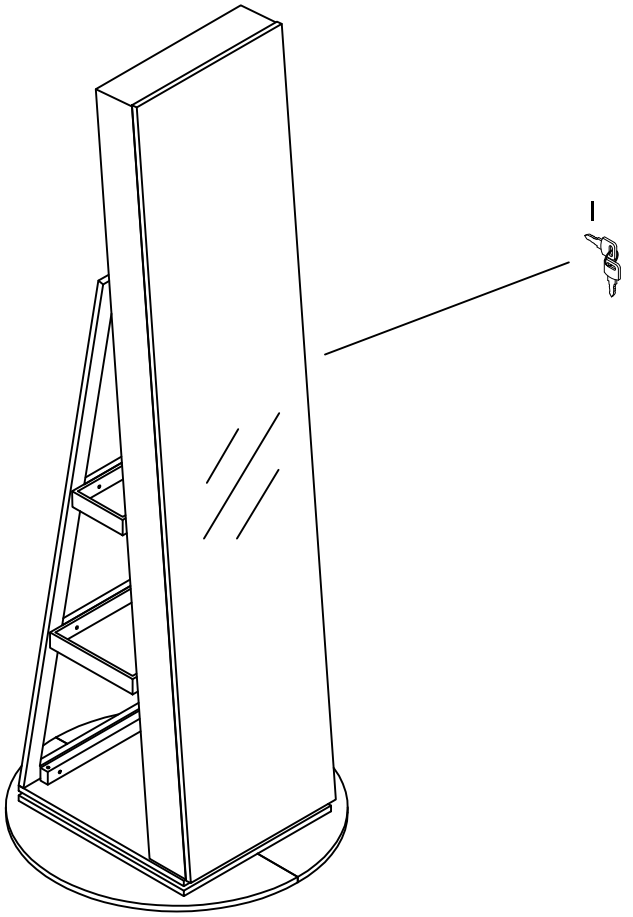

8

