ASSEMBLY INSTRUCTIONS

FULL LOFT BED WITH DESK, WARDROBE, STAIRS AND USB

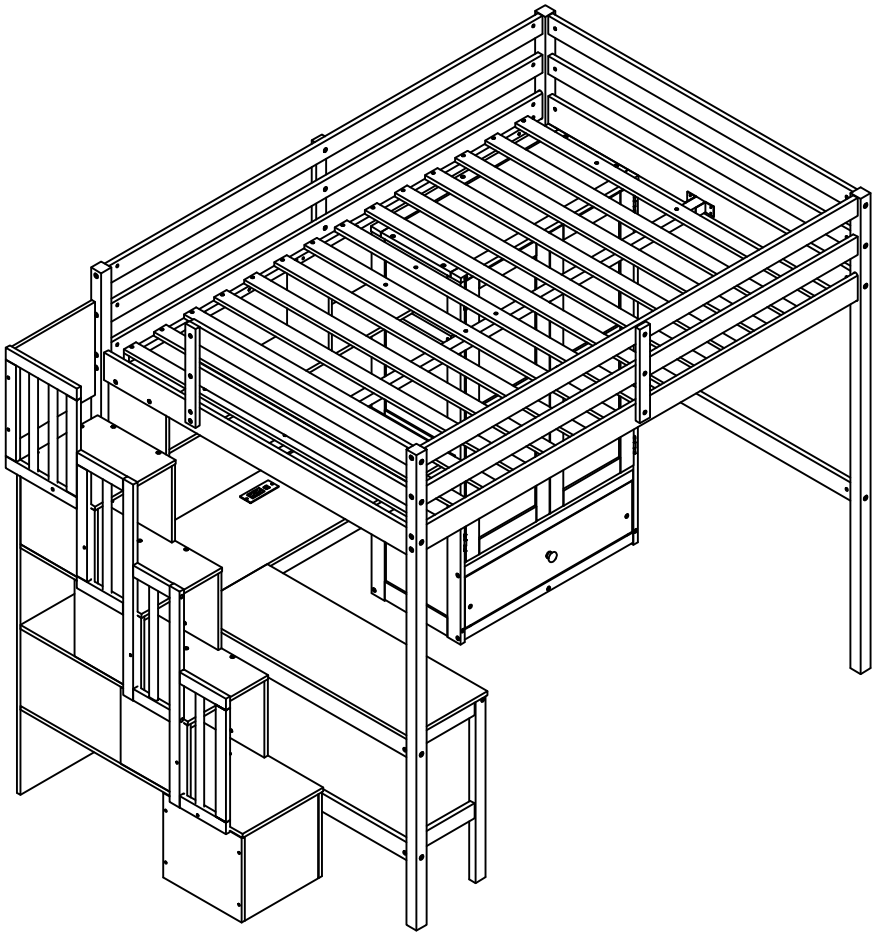

SAFETY WARNING

1. This bed is designed for use only mattress (es) meeting the following specifications on the upper bunk:

   Up bed (Bunk bed and tribed included)

Bed type	Length	Width	Thickness
Full Standard	74"-75"	54"	6" max

2. Replacement parts, including additional guardrails, maybe obtained from any of our dealers
3. Follow the information on the warnings appearing on the upper bunk bed end structure and on the carton. Do not remove warning label from bed.
4. Always use the recommended size mattresses or mattress supports, or both, to help prevent the likelihood of entrapment or falls.
5. Surface of mattress must be at least 5" (127mm) below the upper edge of guardrails.
6. Do not allow children under 6 years of age to use the upper bunk.
7. Periodically check and ensure that the guardrail, ladder, and other components are in their proper position, free from damage, and that all connectors are tight.
8. Do not allow horseplay on or under the bed and prohibit jumping on the bed.
9. Always use the ladder for entering and leaving the upper bunk.
10. Do not use substitute part. Contact the manufacture or dealer for replacement part.
11. Use of a night light may provide added safety precaution for a child using the upper bunk.
12. Always use guardrails on both long sides of the upper bunk. If the bunk bed will be placed next to the wall, the guardrail that runs the full length of the bed should be placed against the wall to prevent entrapment between the bed and wall.
13. The use of water or sleep flotation mattresses is prohibited.
14. STRANGULATION HAZARD - Never attach or hang items to any part of the bunk bed that are not designed for use with the bed; for example, but not limited to, hook, belts and jump ropes.
15. Keep these instruction for future reference.
16. Prohibit more than one person on upper bunk
17. We recommend assembling your bunk bed on the shipping carton to protect your floor or carpet.
18. Be certain all staples are out of the box before beginning assembly on the shipping carton.

Detail View

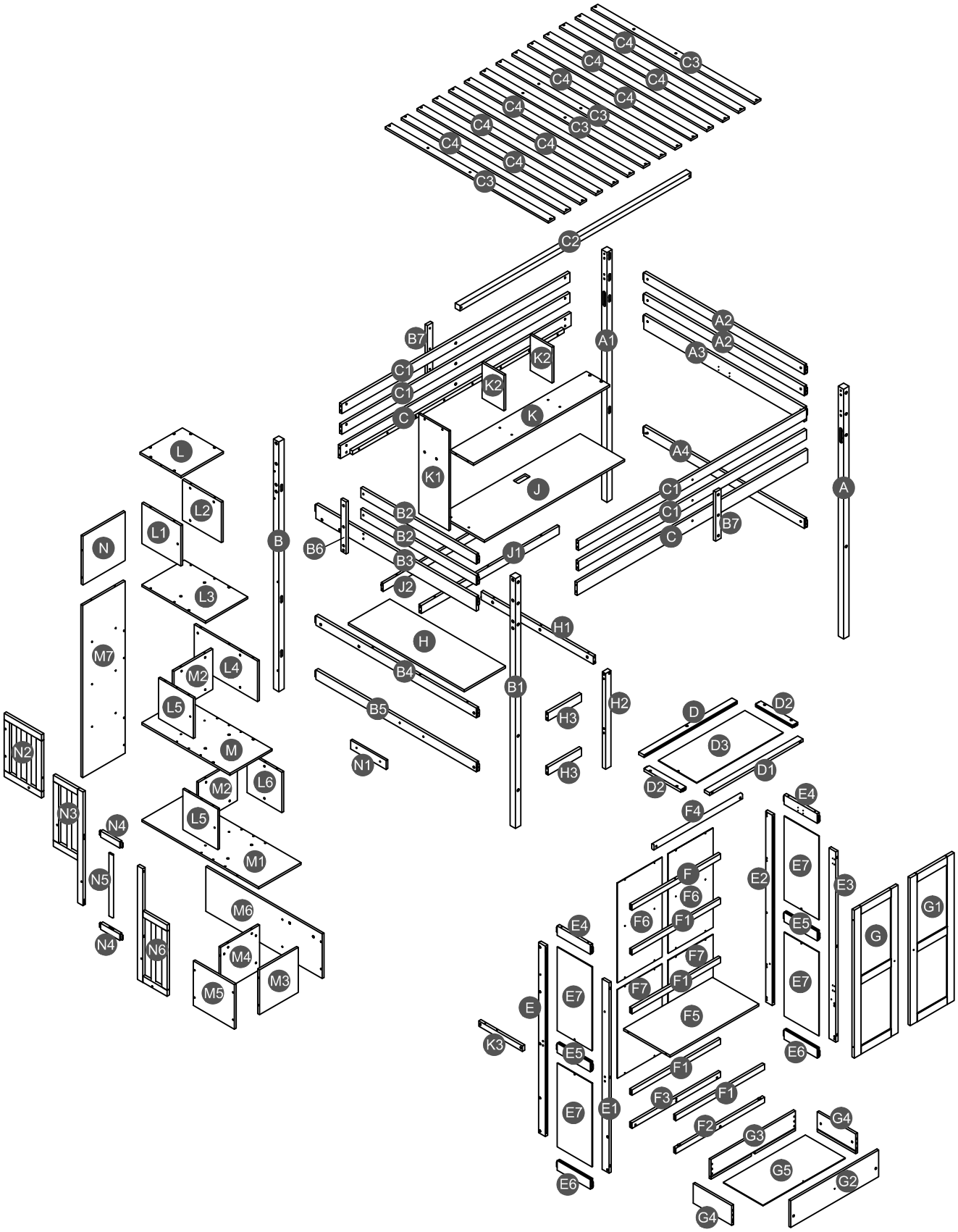
C4
C3
C2
B7
C1
C
K2
K
A1
A2
A3
A4
A
K1
J
B2
B3
B6
J1
J2
B
L
L1
L2
L3
L4
L5
L6
N
N1
N2
N3
N4
N5
N6
M
M1
M2
M3
M4
M5
M6
M7
H
H1
H2
H3
B1
B4
B5
D
D1
D2
D3
E
E1
E2
E3
E4
E5
E6
E7
F
F1
F2
F3
F4
F5
F6
F7
G
G1
G2
G3
G4
G5
K3

Part List

A 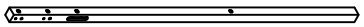 Leg HB (Right front) - 1pc	**A1** 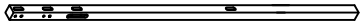 Leg HB (Right back) - 1pc	**B** 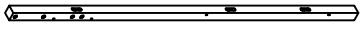 Leg FB (Left back) - 1pc
B1 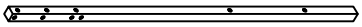 Leg FB (Left front) - 1pc	**B6**  Vertical guard rail - 1pc	**B7**  Vertical guard rail - 2pcs
C 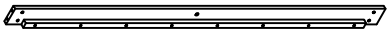 Side rail - 2pcs	**C1** 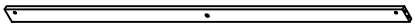 Long guard rail - 4pcs	**C2** 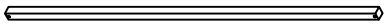 Lower support slat - 1pc
D  Upper horizontal bar (back) - 1pc	**D1** 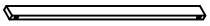 Upper horizontal bar (front) - 1pc	**D2**  Upper horizontal bar (left/right)- 2pcs
E  Vertical bar (left back) - 1pc	**E1**  Vertical bar (left front) - 1pc	**E2** Vertical bar (right back) - 1pc
E3  Vertical bar (right front) - 1pc	**E4**  Upper horizontal bar - 2pcs	**E5**  Divider horizontal bar - 2pcs
E6  Lower horizontal bar - 2pcs	**E7** 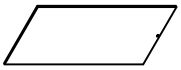 Side panel (Wardrobe) - 4pcs	**H1**  Apron - 1pc
H3  Horizontal bar (front) - 2pcs	**J1** 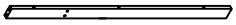 Apron (front) - 1pc	**J2**  Apron (back) - 1pc
K2  Divider panel - 2pcs	**K3** 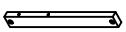 Support bar - 1pc	**L1** 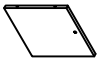 Upper left side panel - 1pc

L2 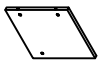 Upper right side panel - 1pc	**L4** 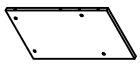 Upper center right side panel - 1pc	**L5**  Center left side panel - 2pcs
L6  Lower center right side panel - 1pc	**N2** 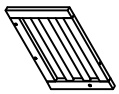 Guard rail -1pc	**N3**  Guard rail -1pc
N4  Guard rail - 2pcs	**N5** Guard rail -1pc	**N6**  Guard rail -1pc

Hardware List

C3 Slats - 4pcs	**C4** Slats - 10pcs	**D3** 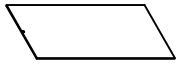 Top panel (Wardrobe) - 1pc
F5  Shelf panel (Wardrobe) - 1pc	**F6** 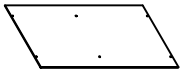 Upper back panel (Wardrobe) - 2pcs	**F7**  Lower back panel (Wardrobe) - 2pcs
G 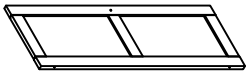 Door (left) - 1pc	**G1** 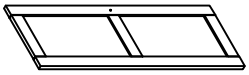 Door (right) - 1pc	**G2** 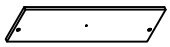 Drawer front - 1pc
G3  Drawer back - 1pc	**G4** 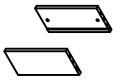 Drawer (left/right) - 2pcs	**G5** 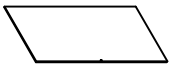 Drawer bottom - 1pc
H 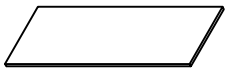 Top table - 1pc	**K** 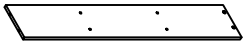 Shelf panel - 1pc	**K1** 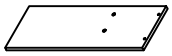 Side panel (left) - 1pc

Part List

A2  Upper horizontal bar HB - 2pcs	**A3** 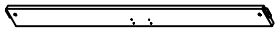 Divider horizontal bar HB - 1pc	**A4**  Lower horizontal bar HB - 1pc
B2 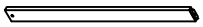 Upper horizontal bar FB - 2pcs	**B3** 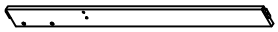 Upper horizontal bar FB - 1pc	**B4** 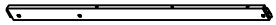 Divider horizontal bar FB - 1pc
B5 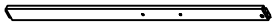 Lower horizontal bar FB - 1pc	**F** Upper horizontal bar (back) - 1pc	**F1** Divider horizontal bar - 4pcs
F2  Lower horizontal bar (front) - 1pc	**F3** 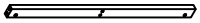 Lower horizontal bar (back) - 1pc	**F4** Hanging bar - 1pc
H2 Leg table (front) - 1pc	**J** 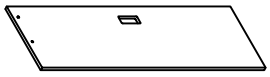 Top table - 1pc	**L** 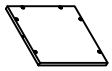 Upper step ladder panel -1pc
L3 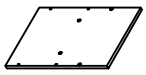 Upper center step ladder panel -1pc	**M** 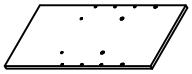 Lower center step ladder panel -1pc	**M1** 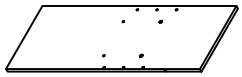 Lower step ladder panel -1pc
M2 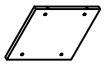 Center back panel - 2pcs	**M3** 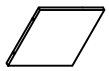 Lower front panel - 1pc	**M4** 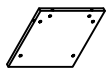 Lower back panel - 1pc
M5 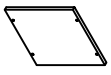 Lower left side panel - 1pc	**M6** 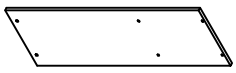 Lower right side panel - 1pc	**M7** 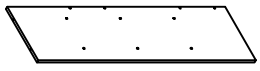 Back panel - 1pc
N 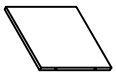 Upper guard back - 1pc	**N1** Support - 1pc	

Hardware List

1 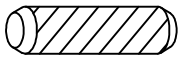 Ø10*40mm	**2** 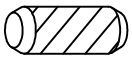 Ø10*20mm	**3** 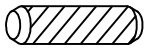 Ø8*30mm
Wood dowel (8pcs)	Wood dowel (1pc)	Wood dowel (45pcs)
4 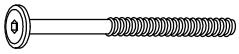 (Ø15)1/4"*100mm	**5** 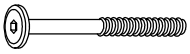 (Ø15)1/4"*80mm	**6** 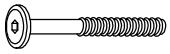 (Ø12)1/4"*60mm
Hex-Head bolts (16pcs)	Hex-Head bolts (23pcs)	Hex-Head bolts (80pcs)
7  (Ø12)1/4"*40mm	**8**  (Ø12)1/4"*30mm	**9**  (Ø12)1/4"*15mm
Hex-Head bolts (4pcs)	Hex-Head bolts (17pcs)	Hex-Head bolts (2pcs)
10  1/4"*15 (9.5mm)	**11**  (Ø12)1/4"*65mm	**12**  (Ø12)1/4"*50mm
Horizontal-Hole bolts(118pcs)	Hex-Head bolts (16pcs)	Hex-Head bolts (2pcs)
13  (Ø12)1/4"*40mm	**14**  Ø4*30mm	**15**  Ø3.5*15mm
Hex-Head bolts (13pcs)	Wood screws (34pcs)	Wood screws (61pcs)
16  Ø3.5*15mm	**17**  (Ø13)1/4"*14mm	**18**  116*40*27mm
Wood screws (20pcs)	Connect bolt (4pcs)	Metal bracket (2pcs)
19  63*40*30mm	**20** 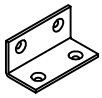 40*17*17*1.6mm	**21**  42*12*1mm
Metal bracket (2pcs)	Metal bracket (1pc)	Metal magnet (2pcs)
22  70*37*28mm (135°)	**23** 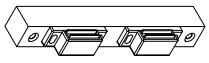 140*41*21mm	**24**  Ø38*31mm
Metal bracket (4pcs)	Stopper door (1pc)	Pine Knob (3pcs)
25  3/16"*25mm	**26**  24*28*28*2mm	**27**  365*58*28 mm
Ph zinc(Knob) (3pcs)	Metal bracket (2pcs)	Lower slider drawer (1pc)

28  340*30mm	**29** 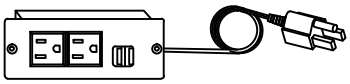 1500*125*47*43mm	**30** 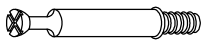 Ø7"*35mm
Upper slider drawer (1pc)	Power outlet	Cam lock (16pcs)
31  Ø14*9mm	**32**  (1/4")4.5*58mm	
Cam lock (16pcs)	Allen key (2pcs)	

ASSEMBLY TOOLS REQUIRED (NOT INCLUDED)

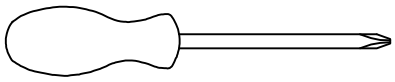



PLEASE BE CAREFUL DO NOT DAMAGE THE HOLE POSITION WHEN YOU USE POWER TOOLS !

STEP 1:

5	10	15	18
6PCS	6PCS	4PCS	1PC

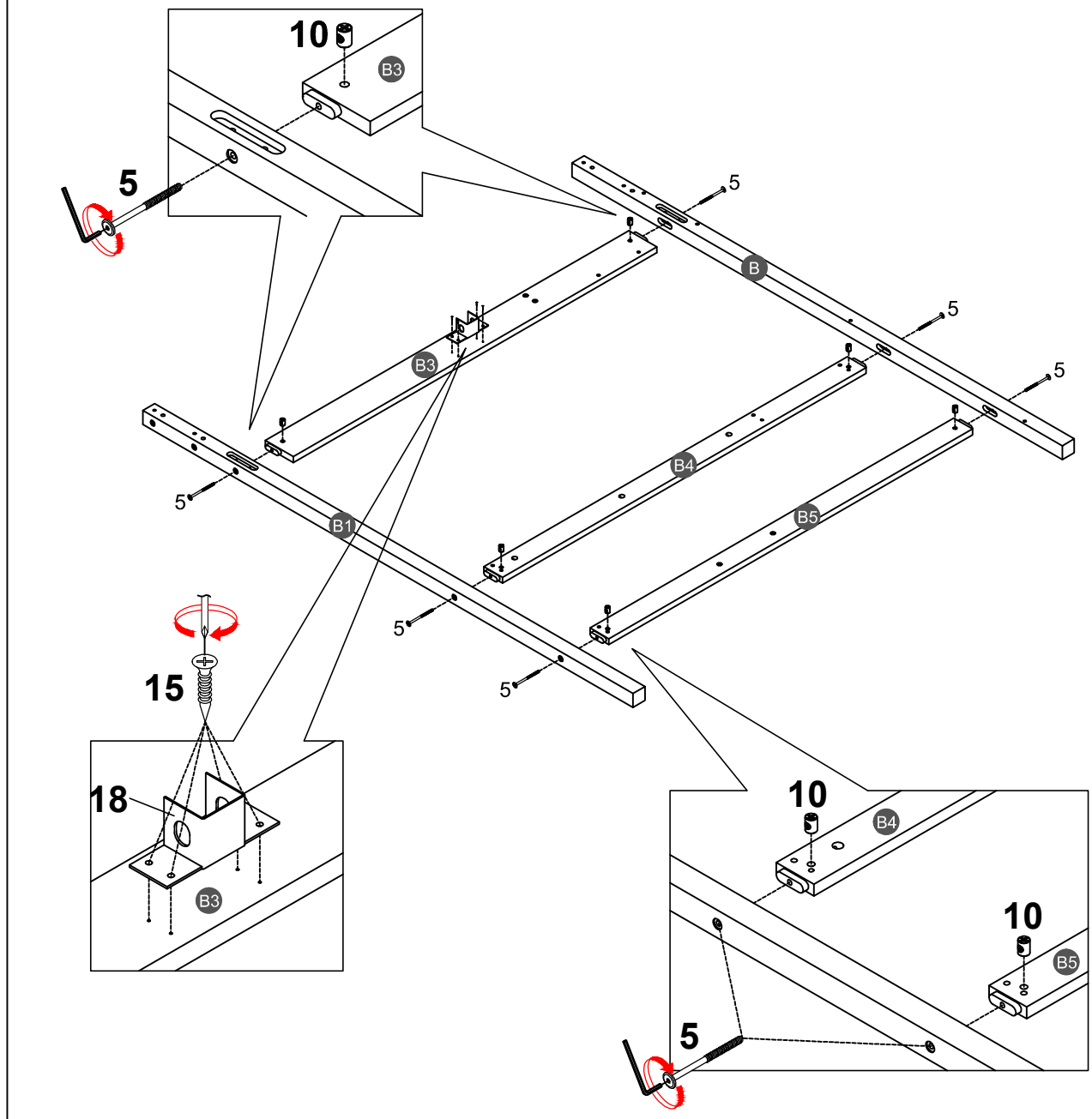

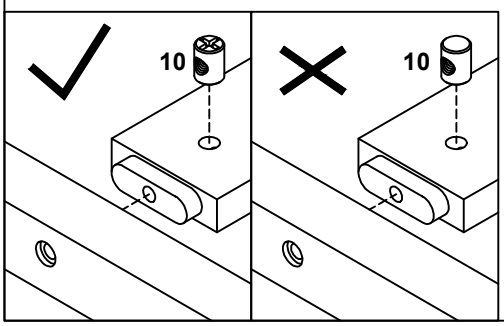

STEP 2:

5	10	15	18
8PCS	8PCS	4PC	1PC

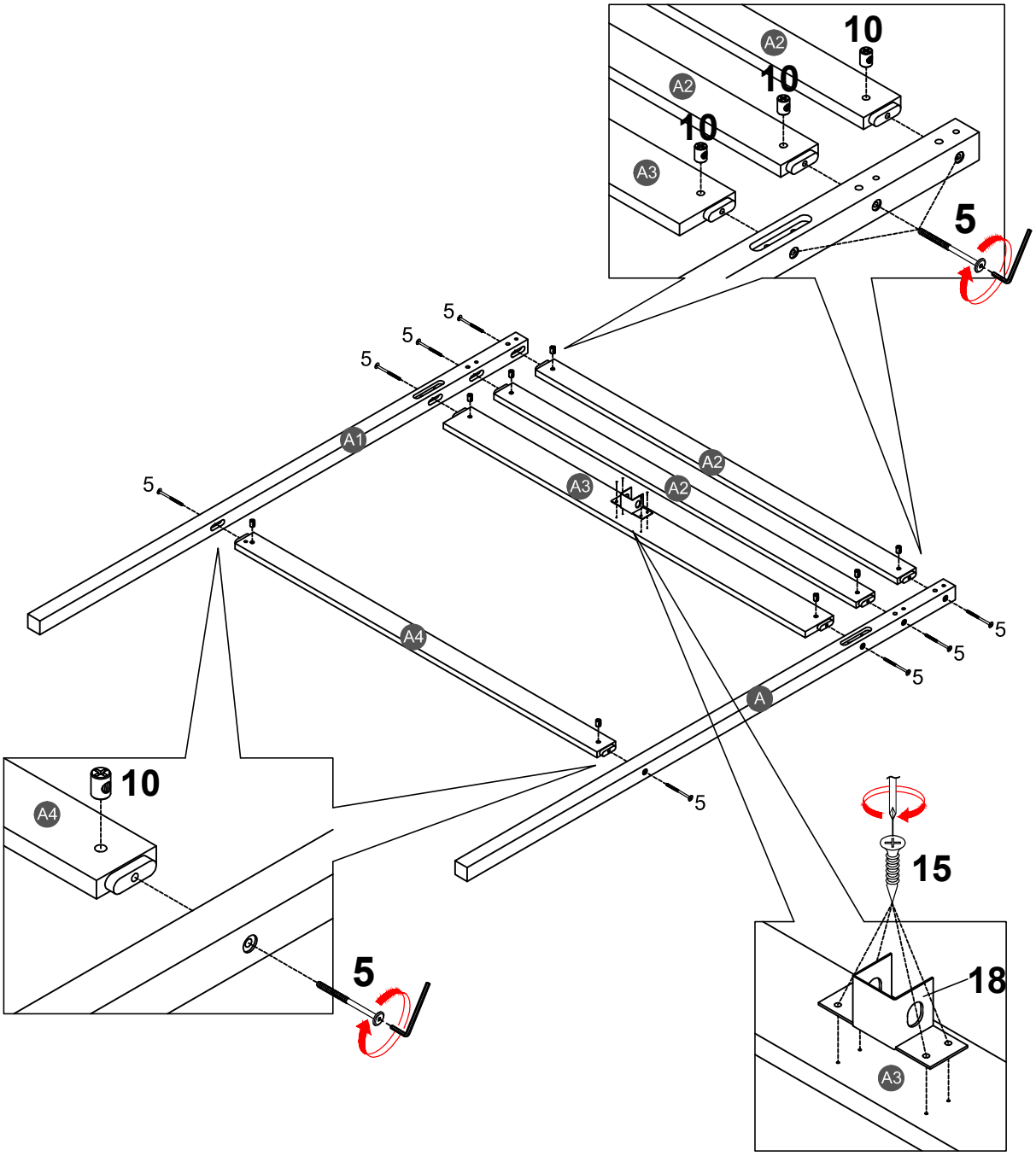

STEP 3:

1	4	10
8PCS	16PCS	16PCS

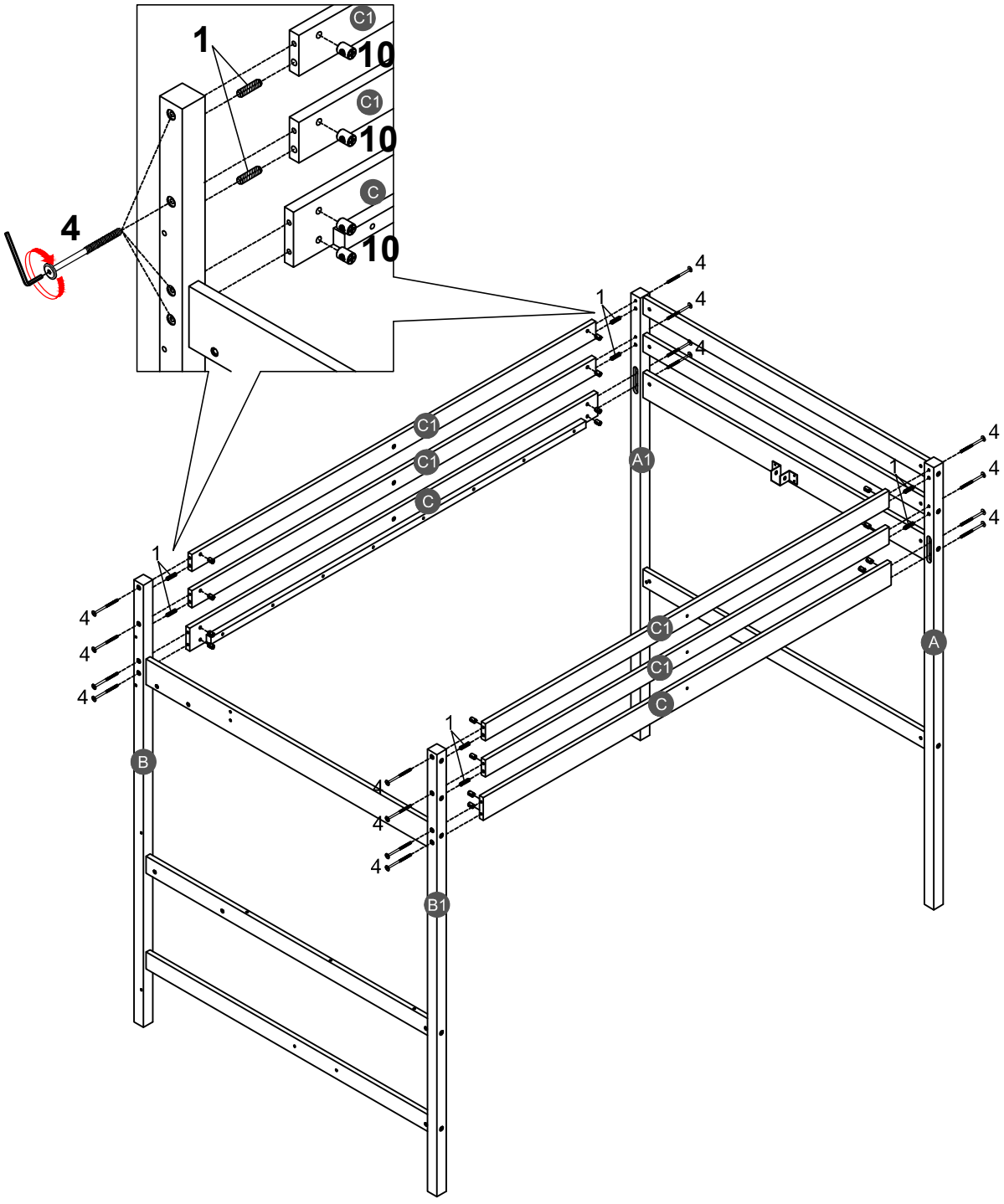

STEP 4:

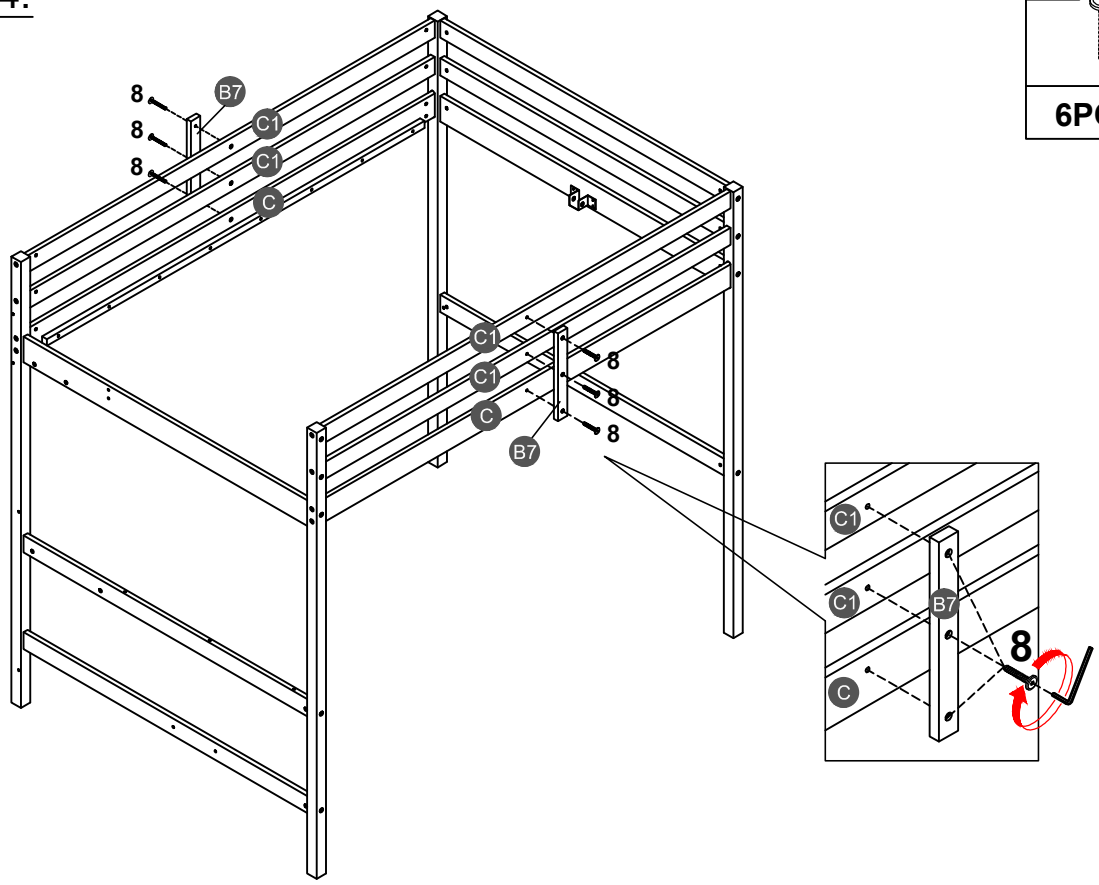

8

6PCS

STEP 5:

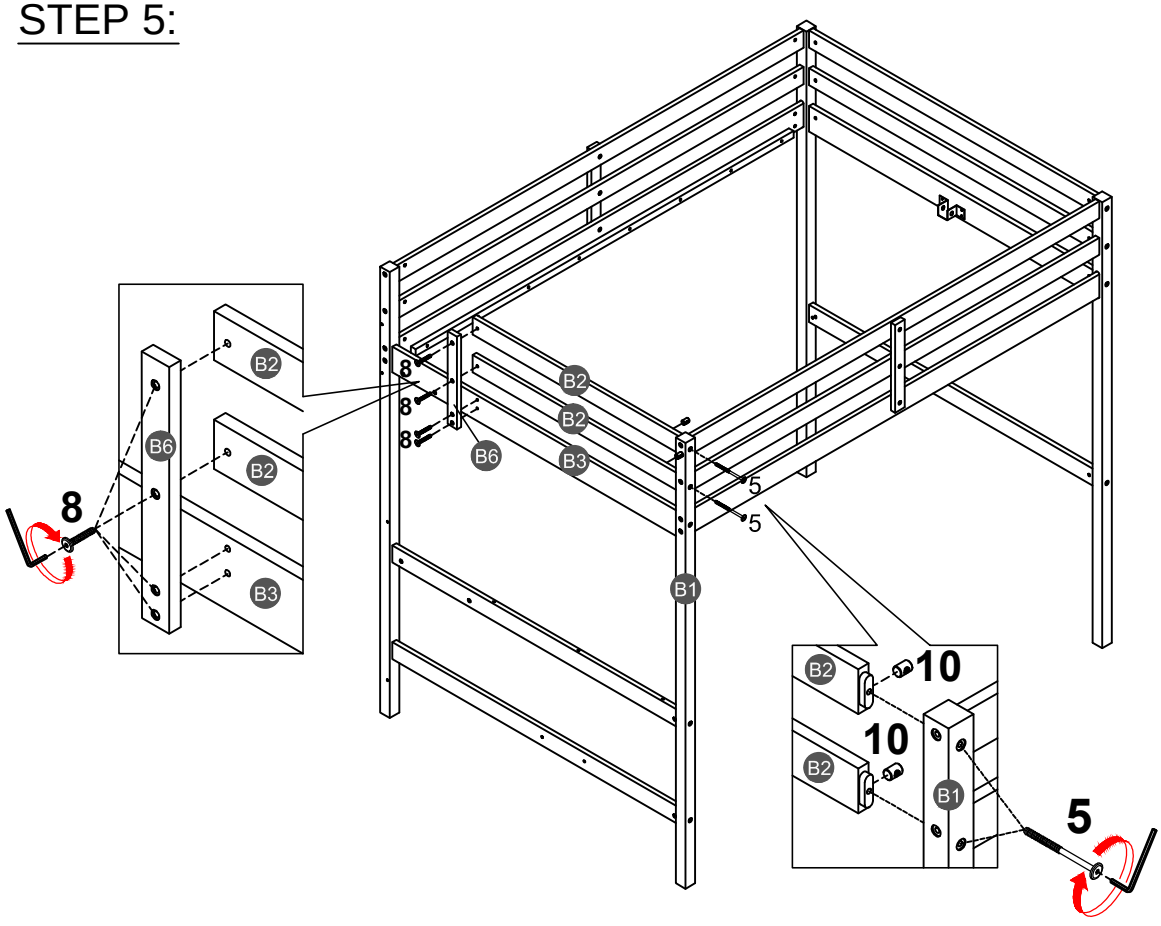

8

4PCS

5

2PCS

10

2PCS

STEP 6:

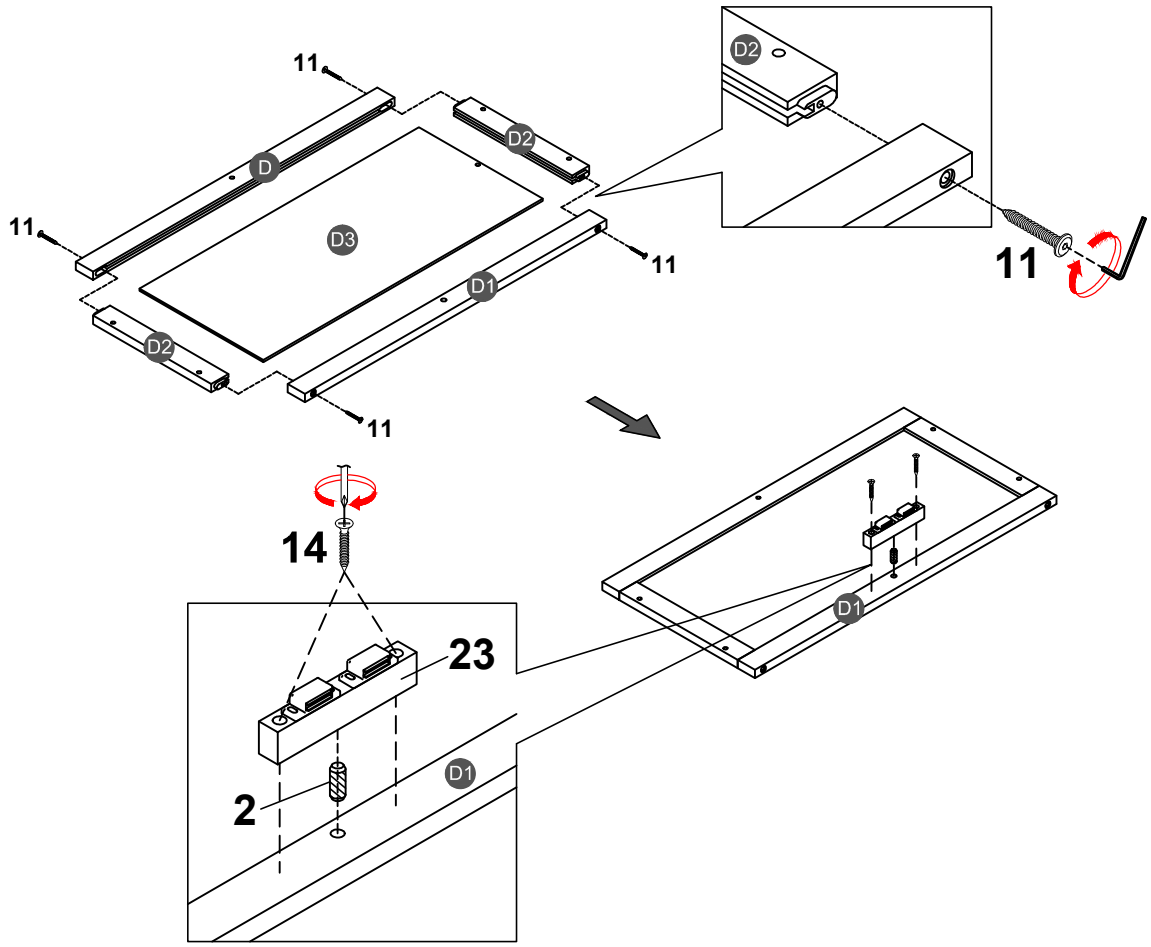

2	11	14	23
1PC	4PCS	2PCS	1PC

STEP 7:

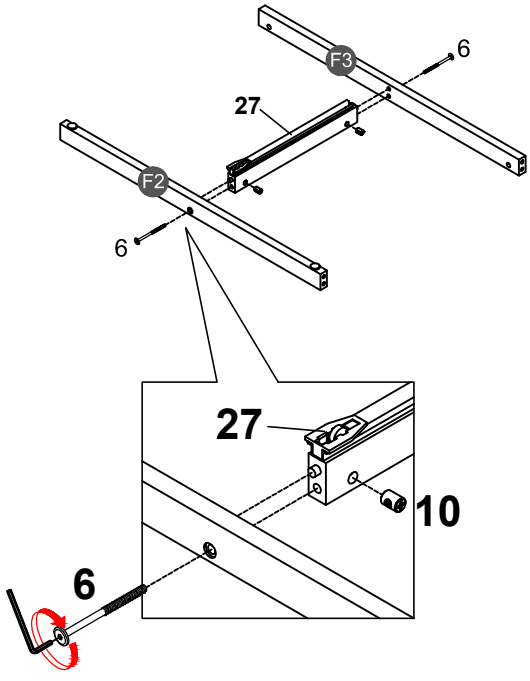

6	10	27
2PCS	2PCS	1PC

STEP 8:

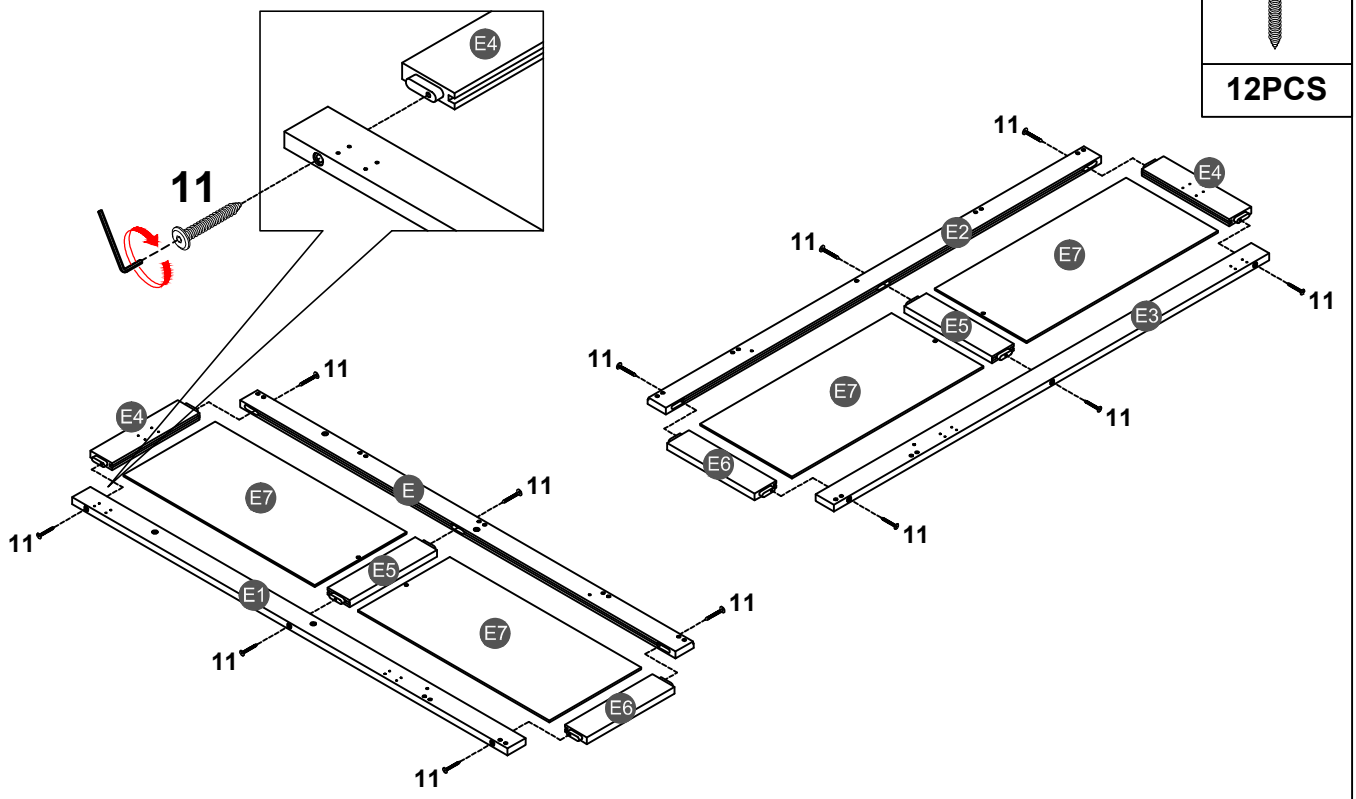

STEP 9:

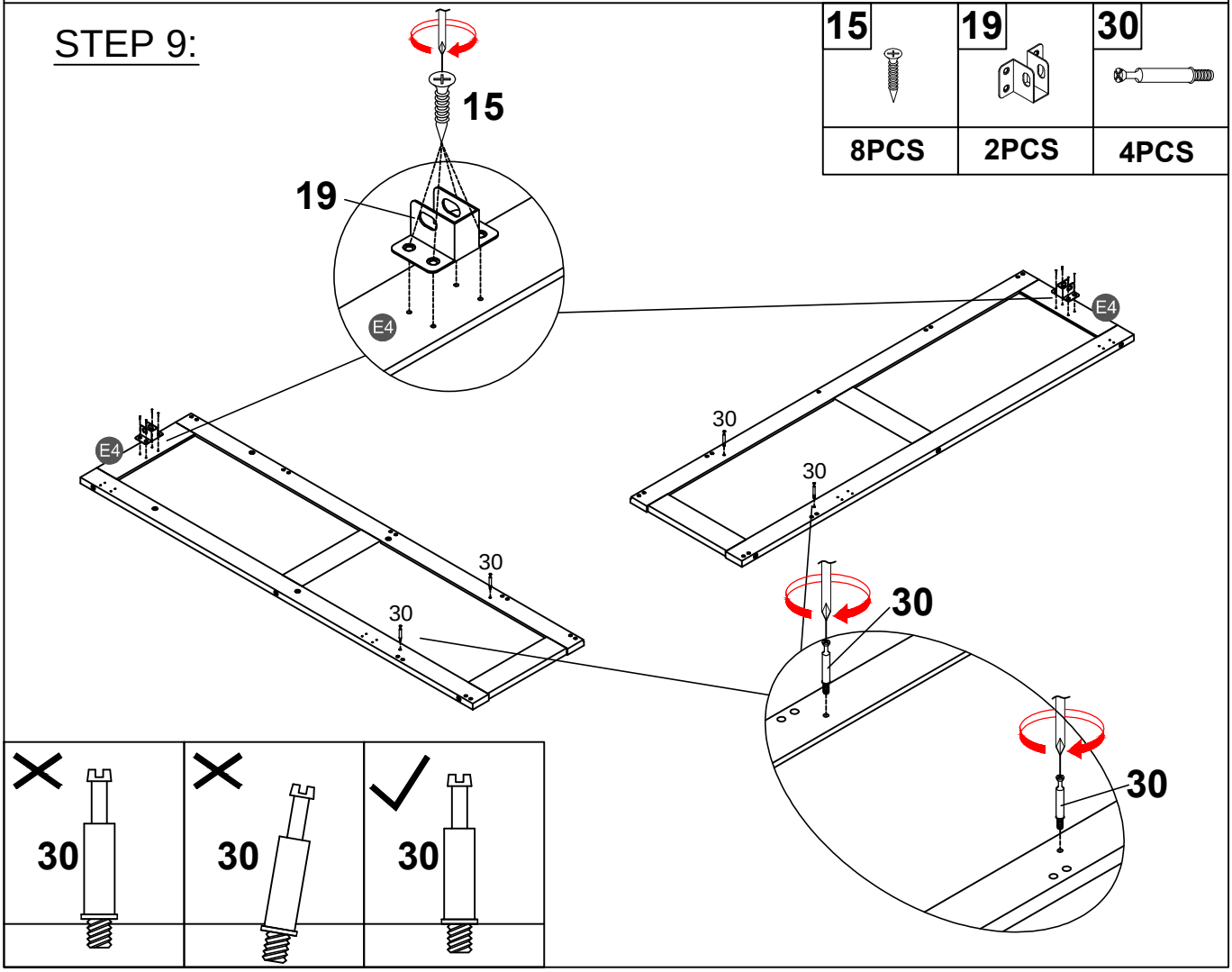

STEP 10:

3	6	10
6PCS	6PCS	6PCS

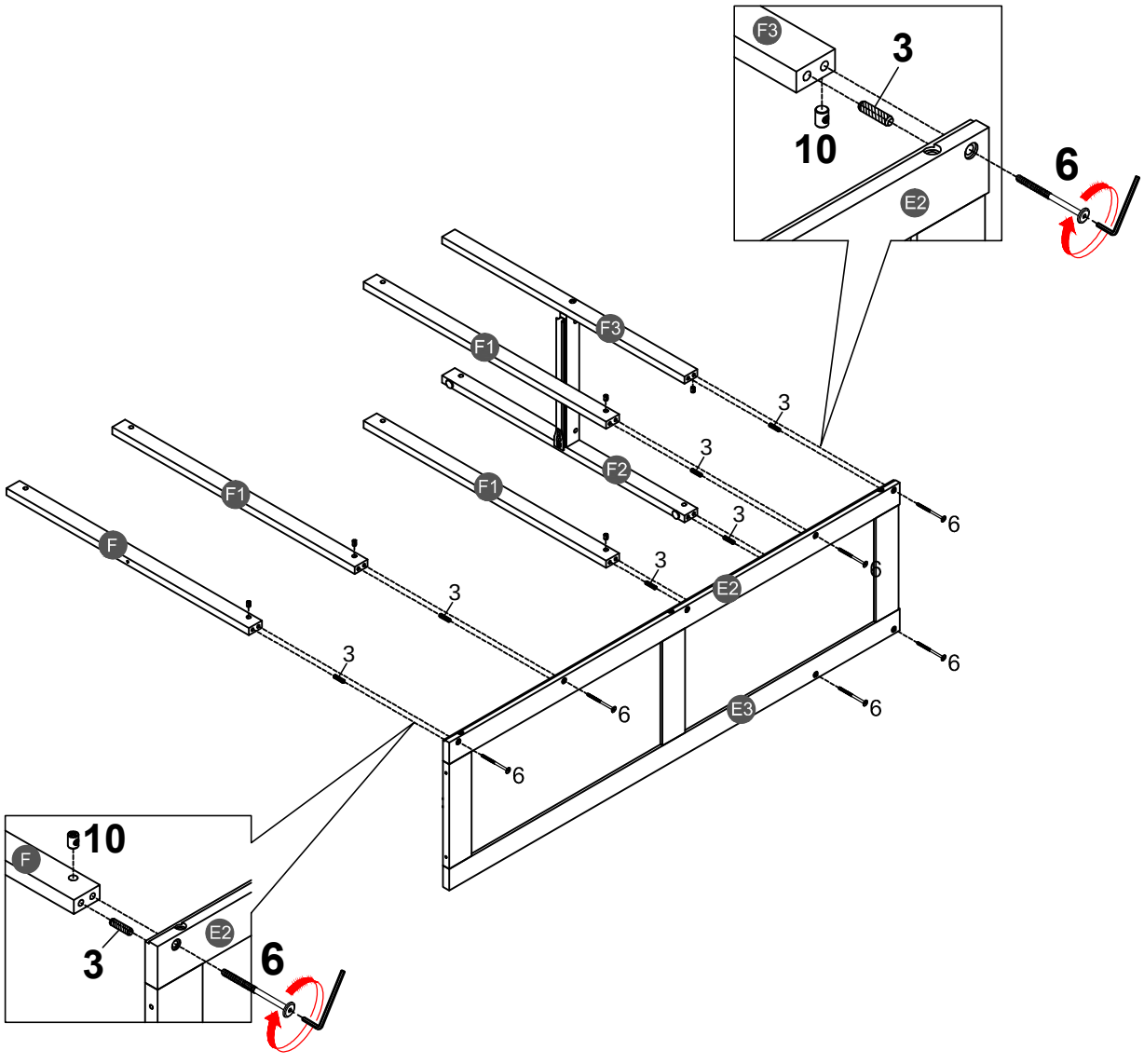

STEP 11:

31

2PCS

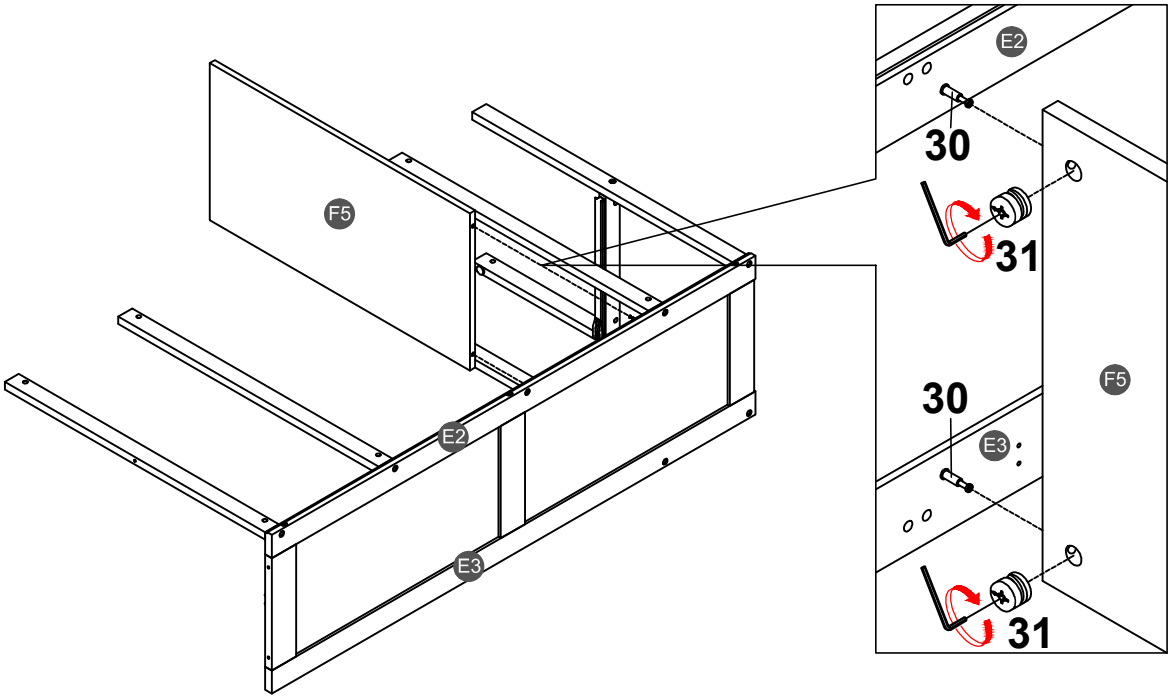

Note: Place hardware #31 with the "X" face outward,
and make sure that the arrowhead is upward. Then, place hardware #31 into the hole of hardware #30 and tighten it clockwise with a hand screwdriver.
(Please do NOT use an electric screwdriver.)

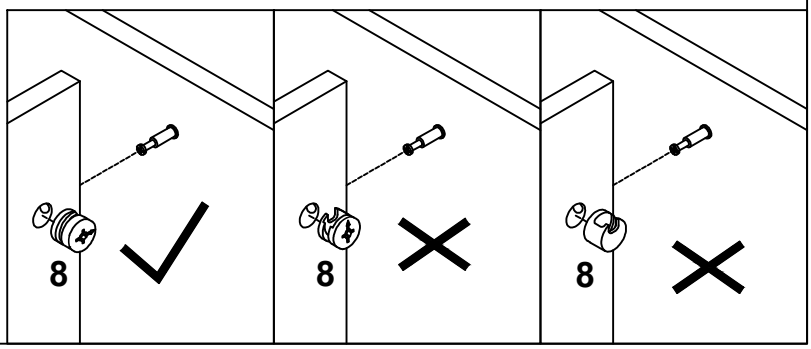

STEP 12:

3	6	10	31
6PCS	6PCS	6PCS	2PCS

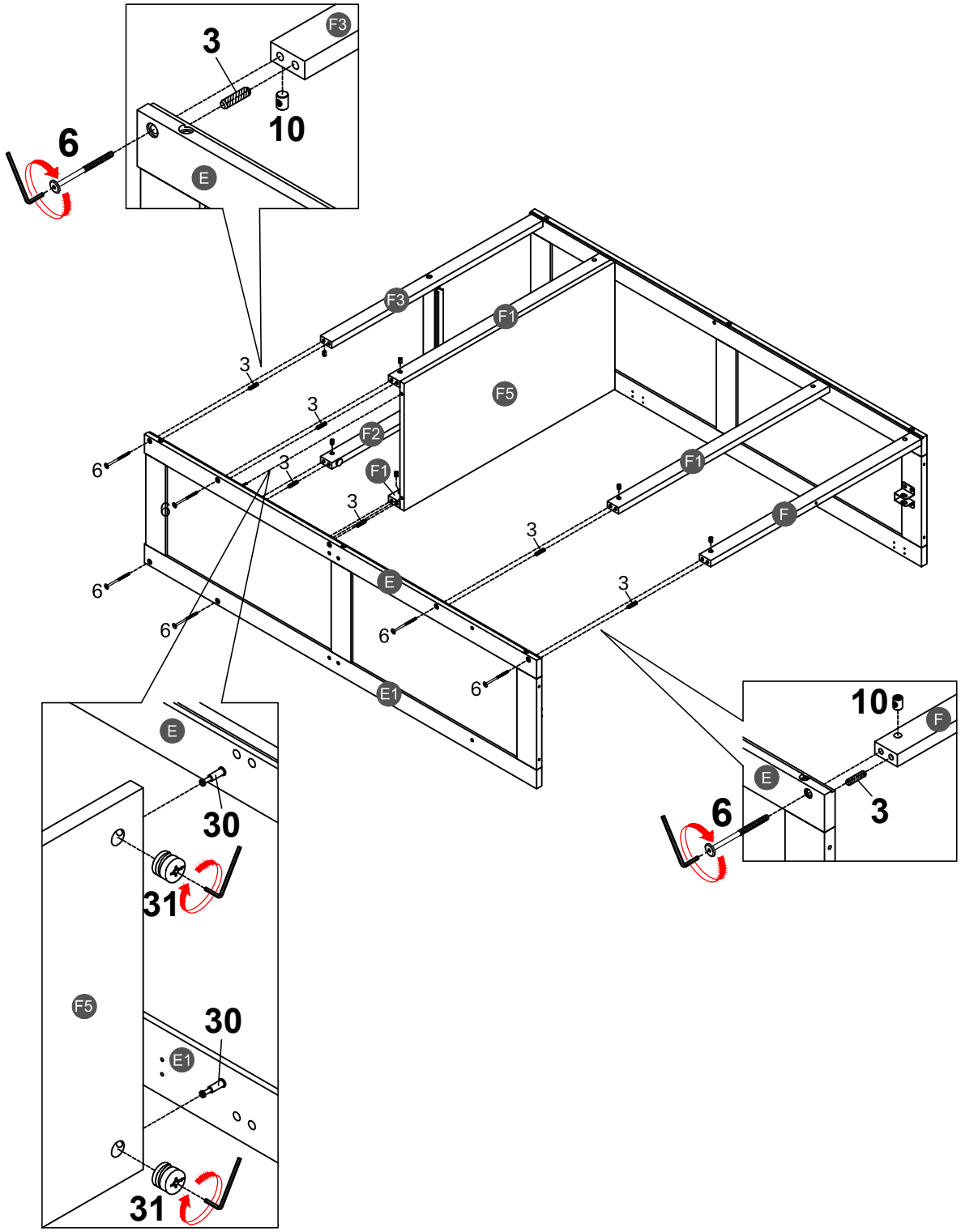

STEP 13:

9	17
2PCS	2PCS

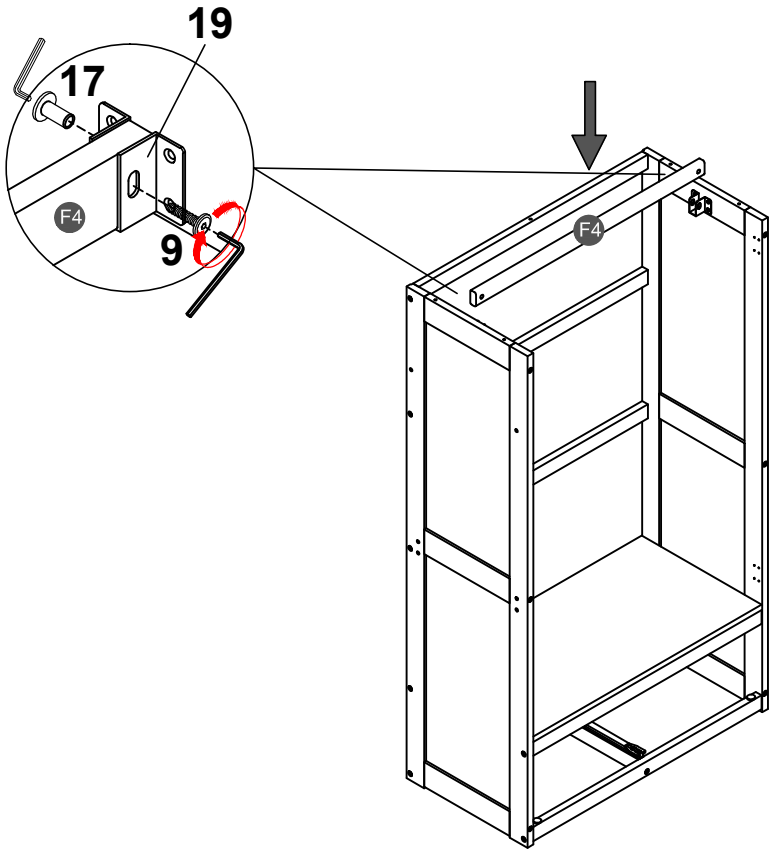

STEP 14:

8
2PCS

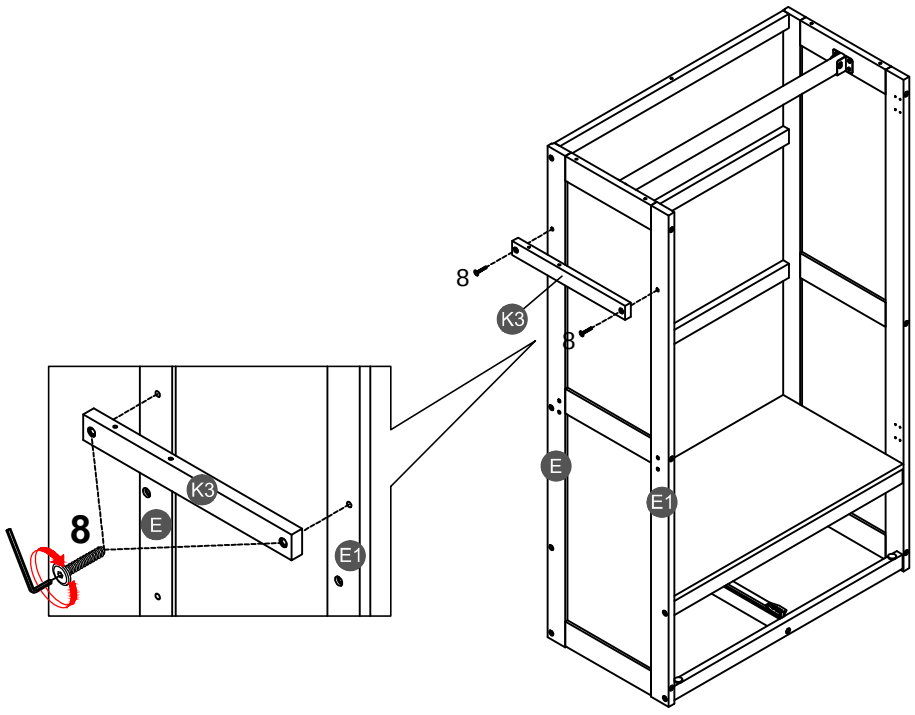

STEP 15:

13
5PCS

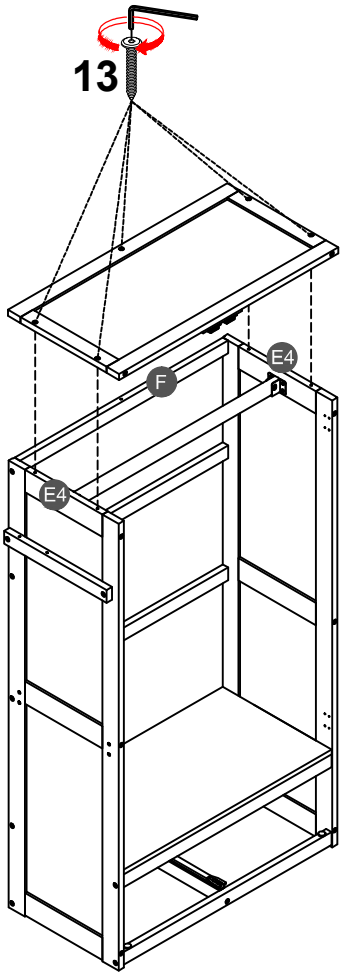

STEP 16:

15	21
4PCS	2PCS

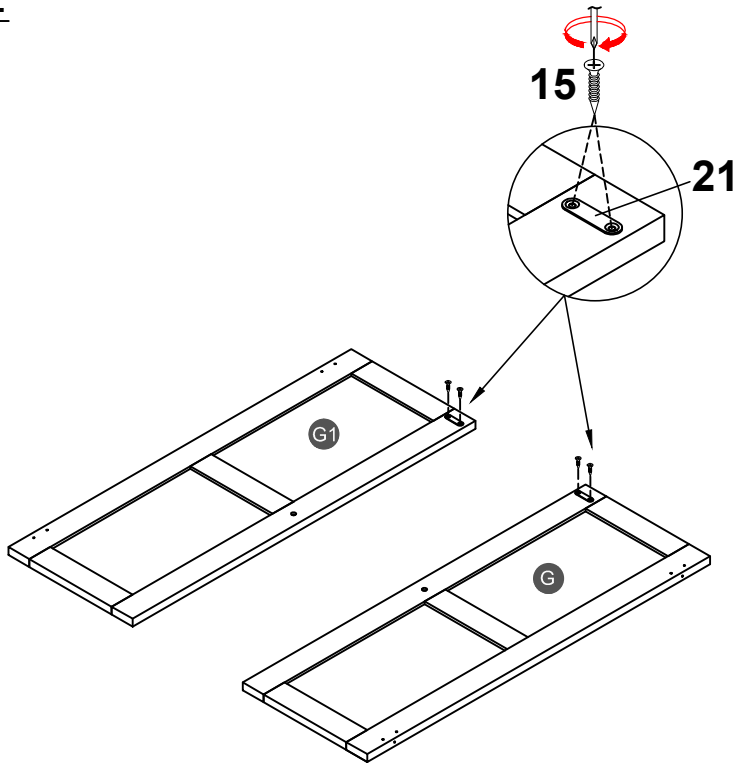

STEP 17:

15	22
12PCS	4PCS
24	25
2PCS	2PCS

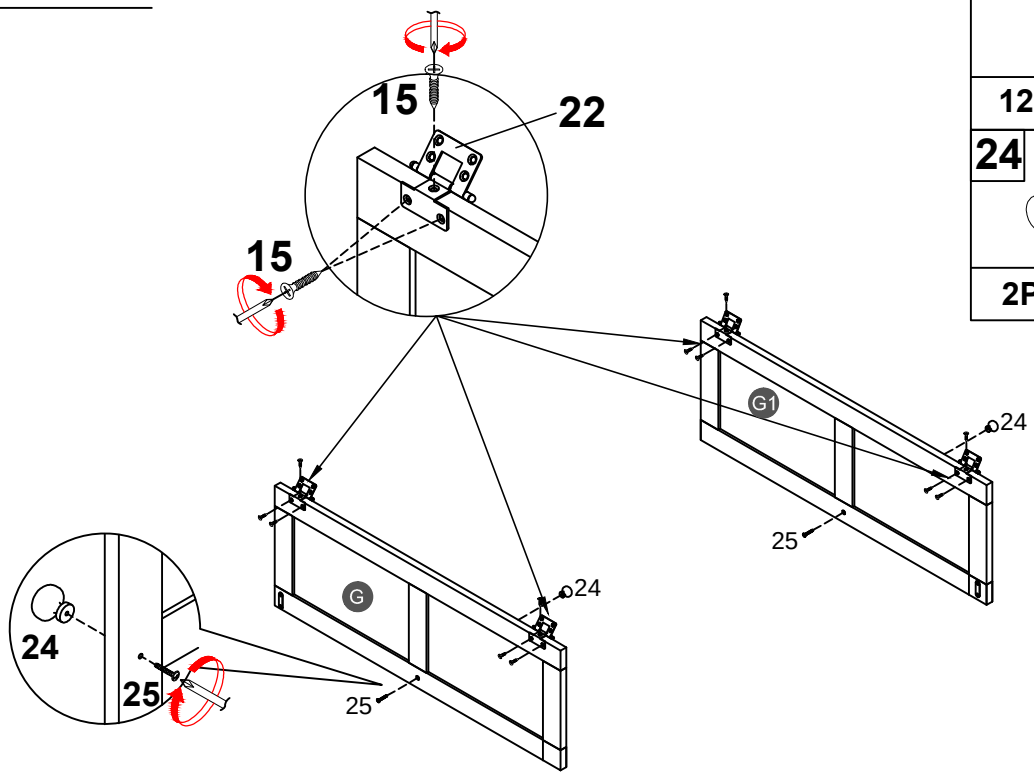

STEP 18:

15
16PCS

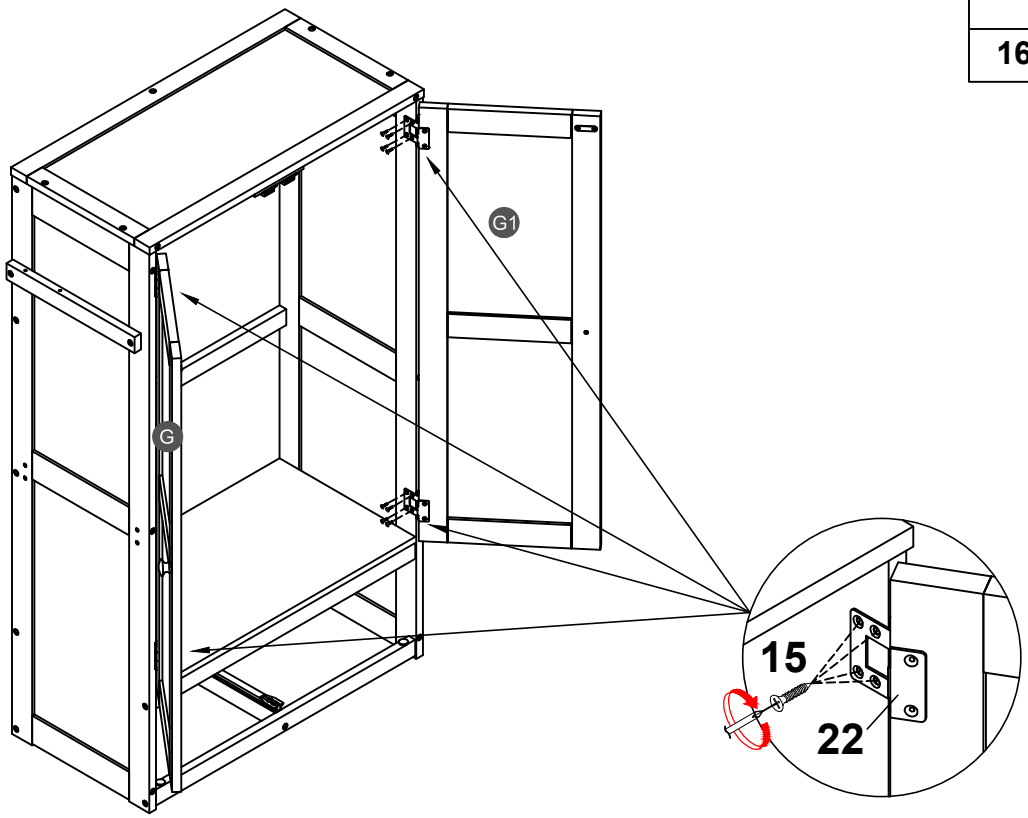

STEP 19:

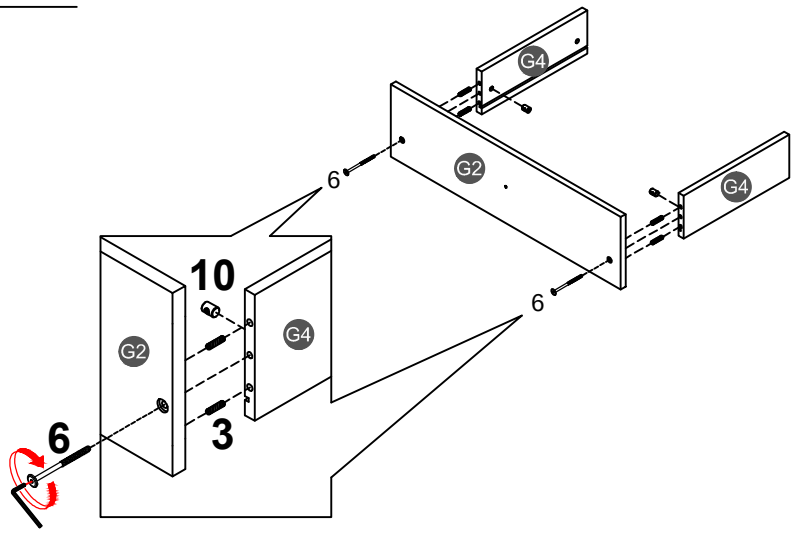

3	6
4PCS	2PCS

10
2PCS

STEP 20:

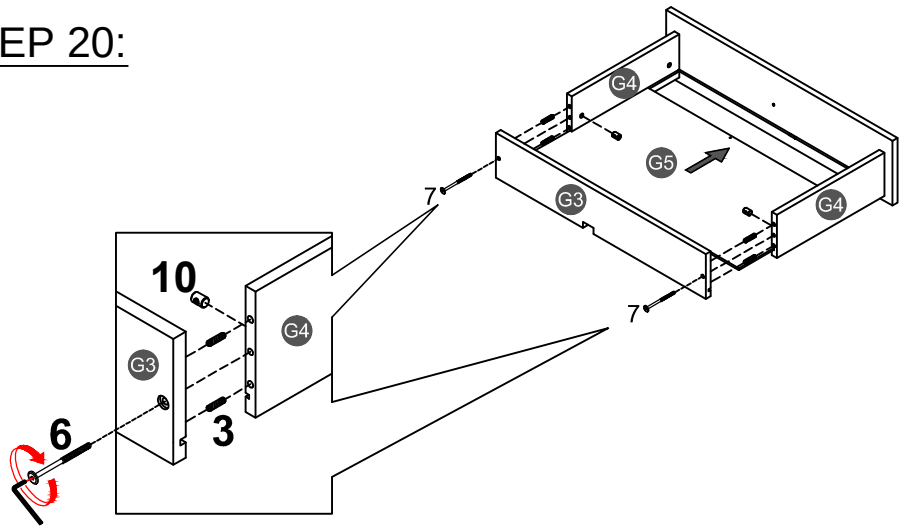

3	6
4PCS	2PCS

10
2PCS

STEP 21:

15	28
3PCS	1PC

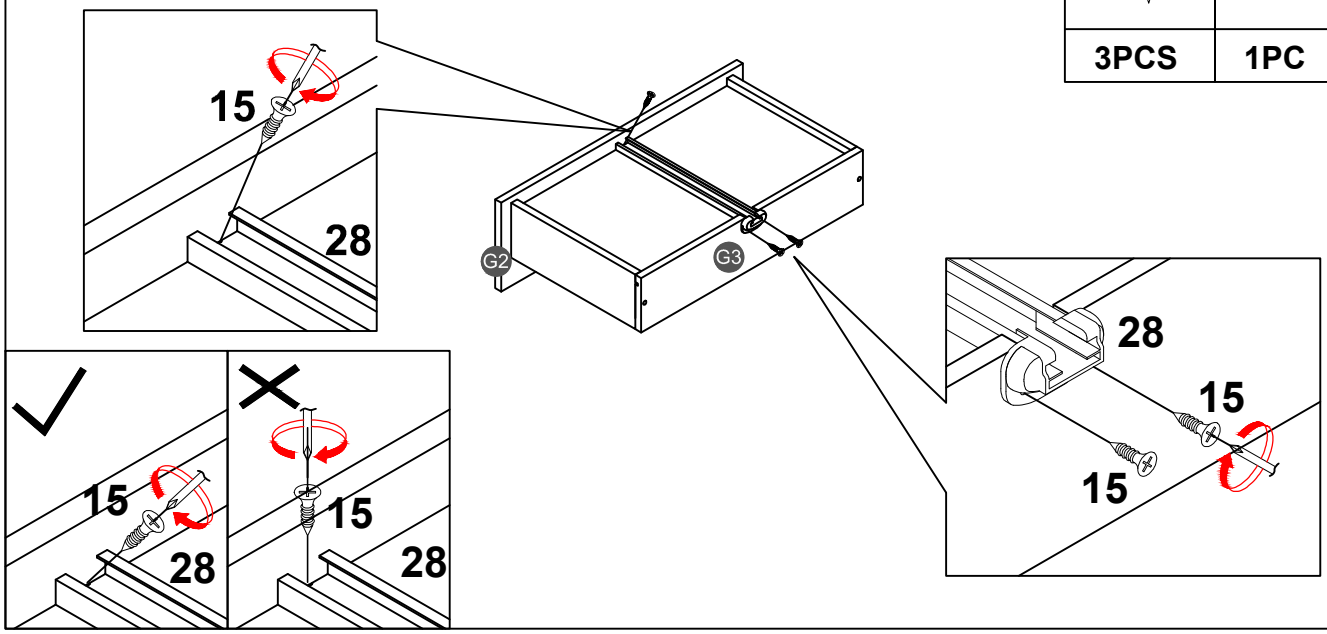

STEP 22:

24	25
1PC	1PC

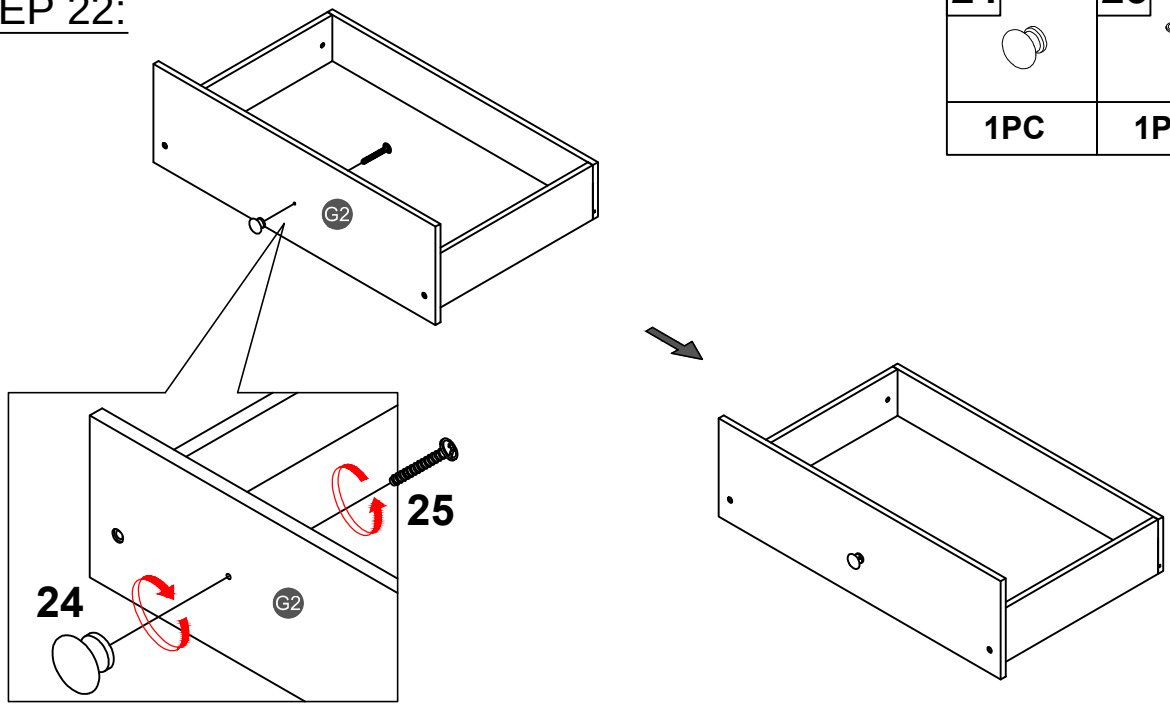

STEP 23:

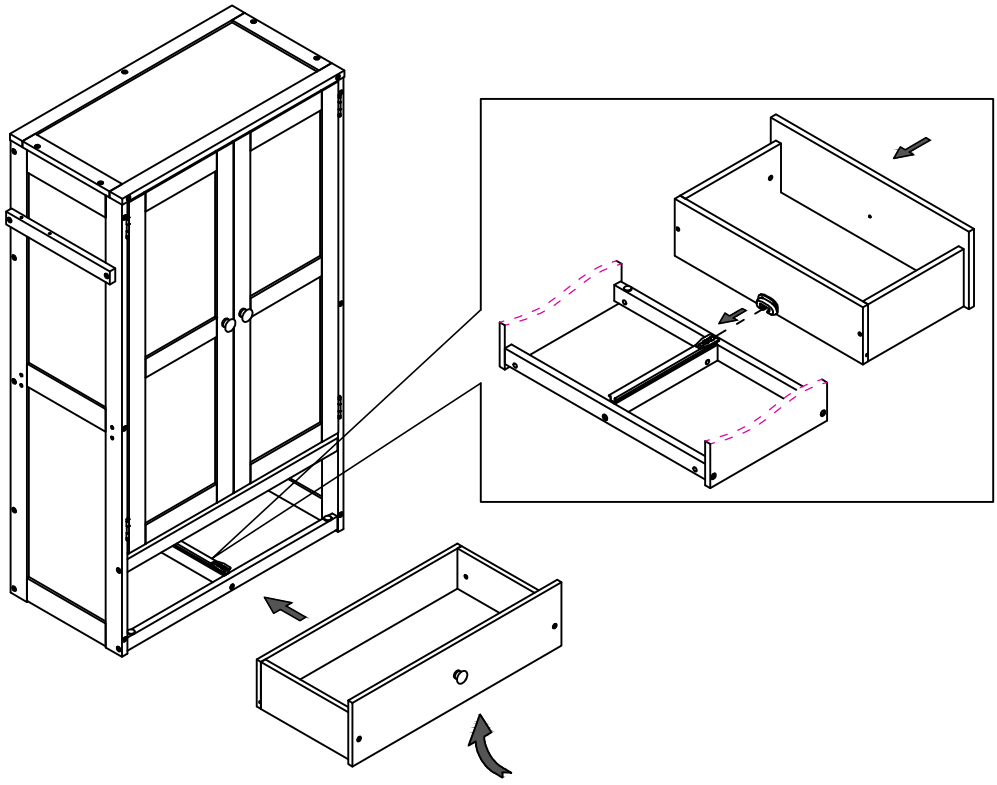

Align the slide rail at the bottom of the drawer and ensure it is secure, then push the drawer in firmly to make the slide rails smoothly on the track.

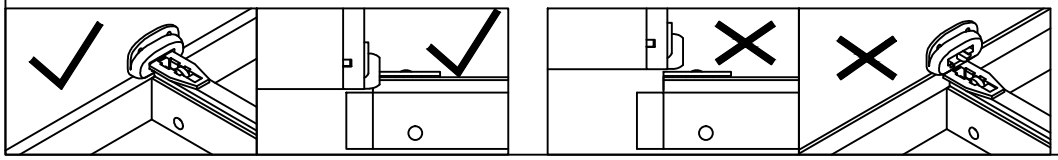

STEP 24:

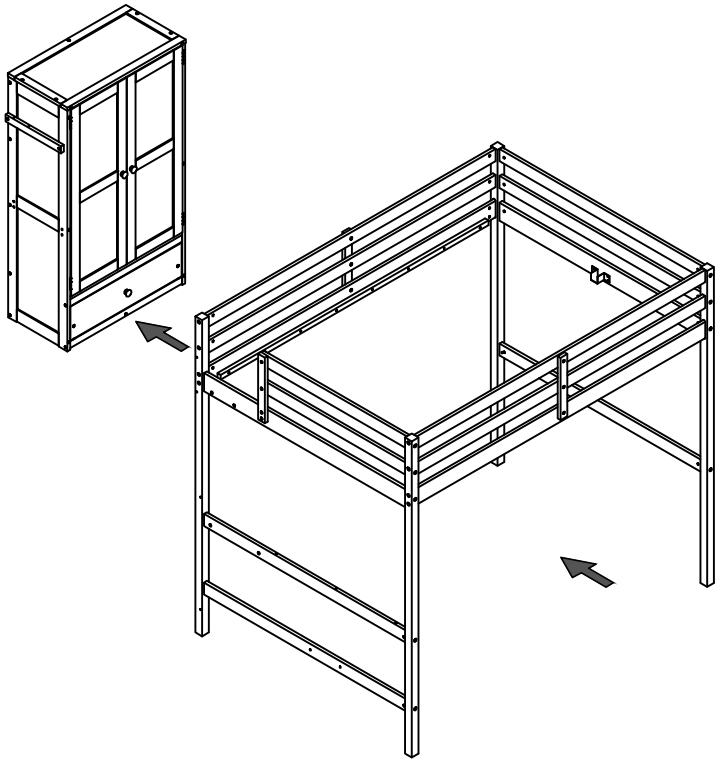

STEP 25:

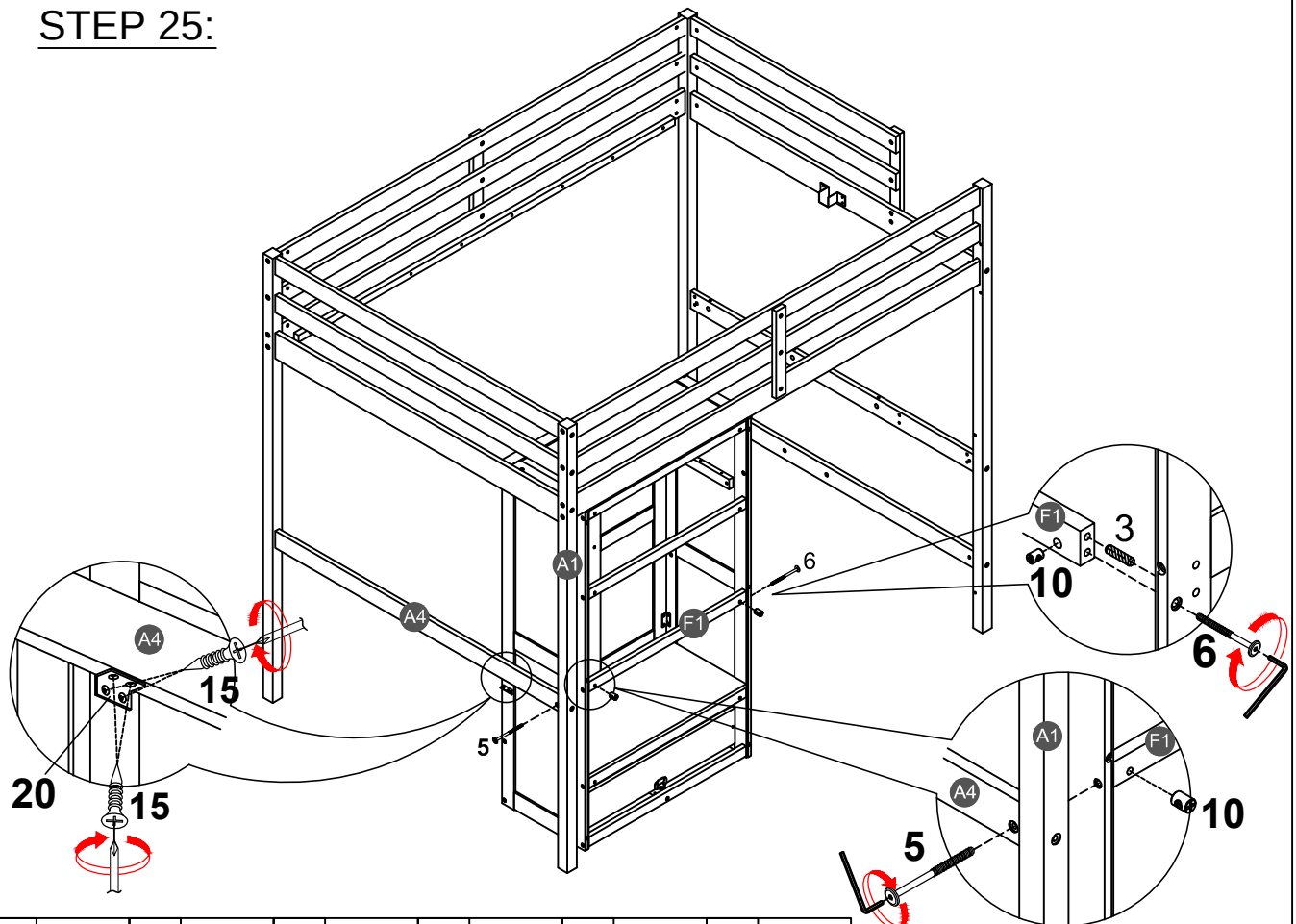

3	5	6	10	15	20
1PC	1PC	1PC	2PCS	4PCS	1PC

STEP 26:

30
12PCS

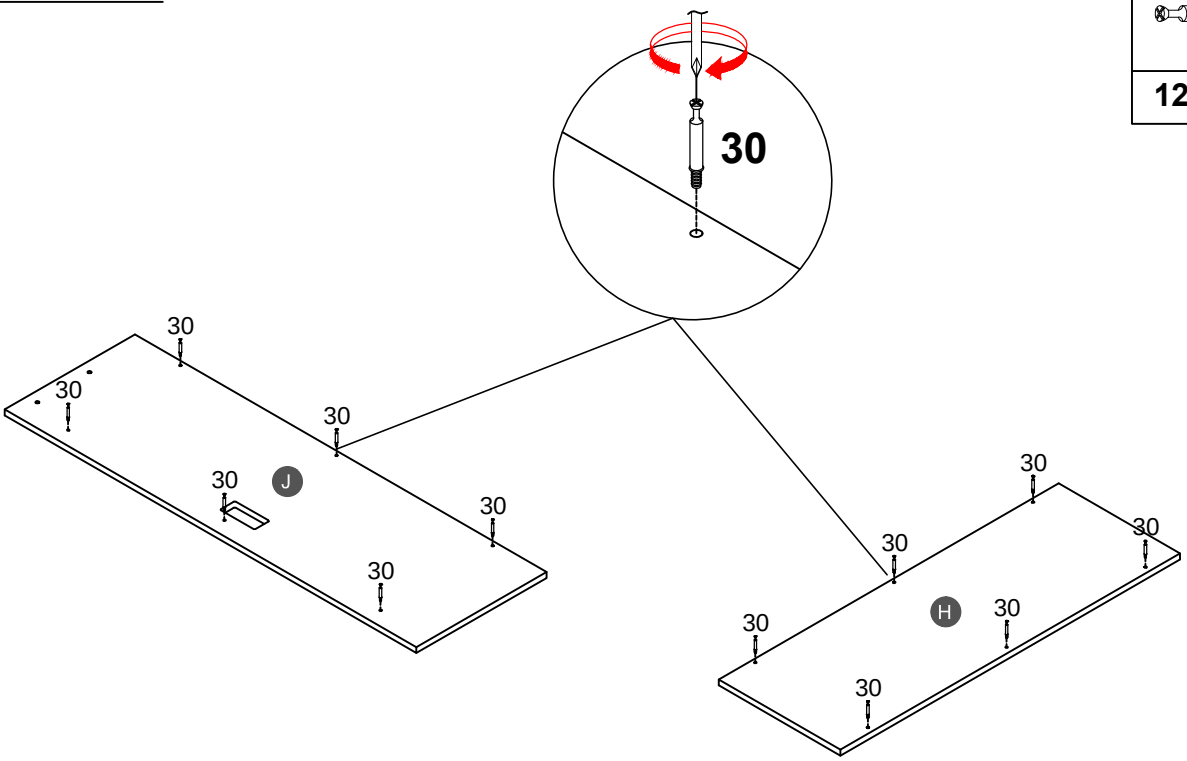

STEP 27:

3	5	10
		
2PCS	2PCS	2PCS

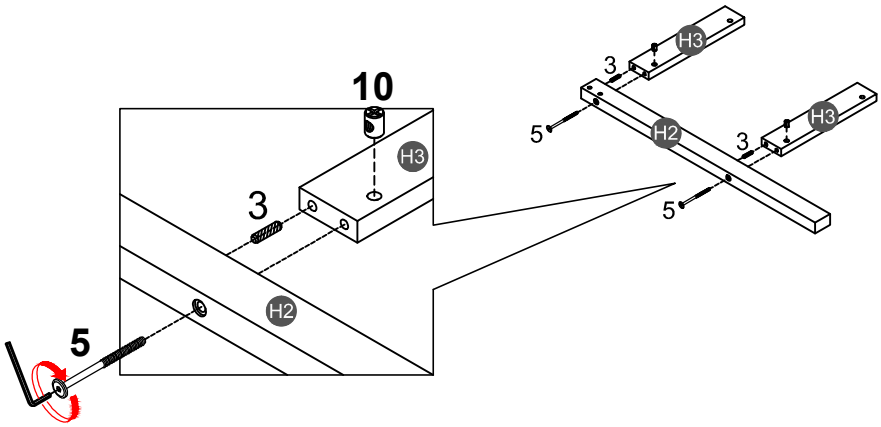

STEP 28:

3	6	10
2PCS	2PCS	2PCS

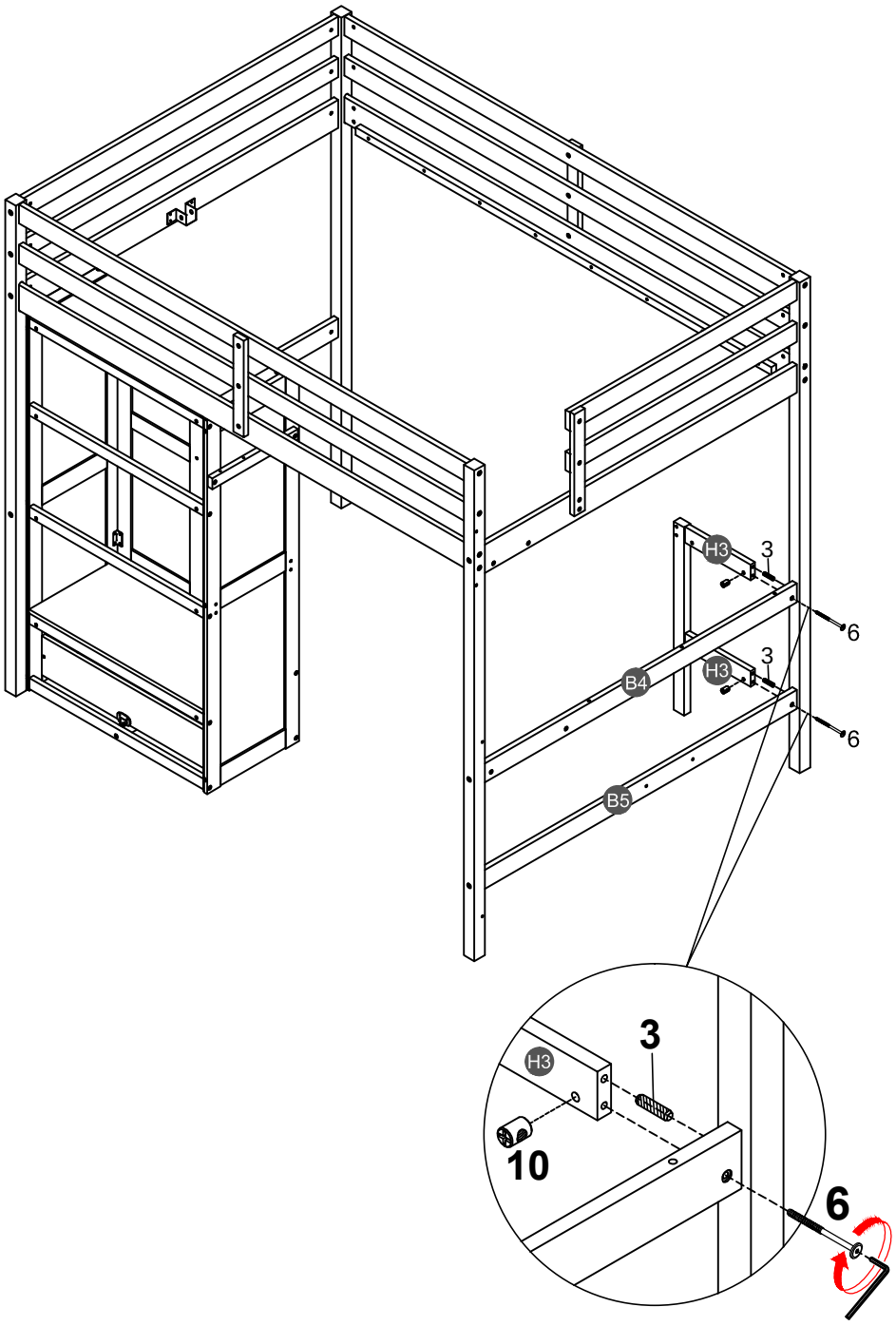

STEP 29:

6	10	12
4PCS	4PCS	2PCS

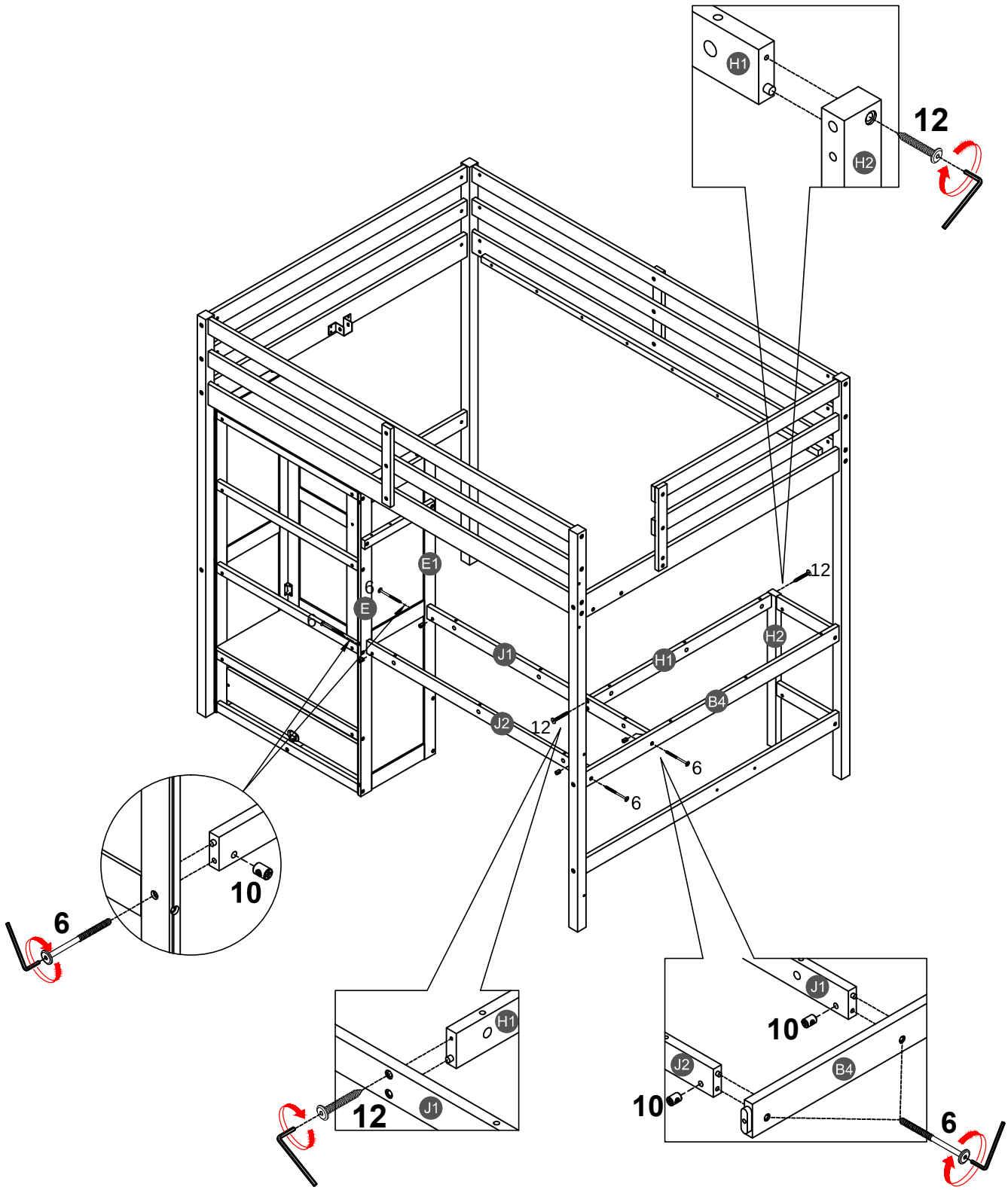

STEP 30:

31

12PCS

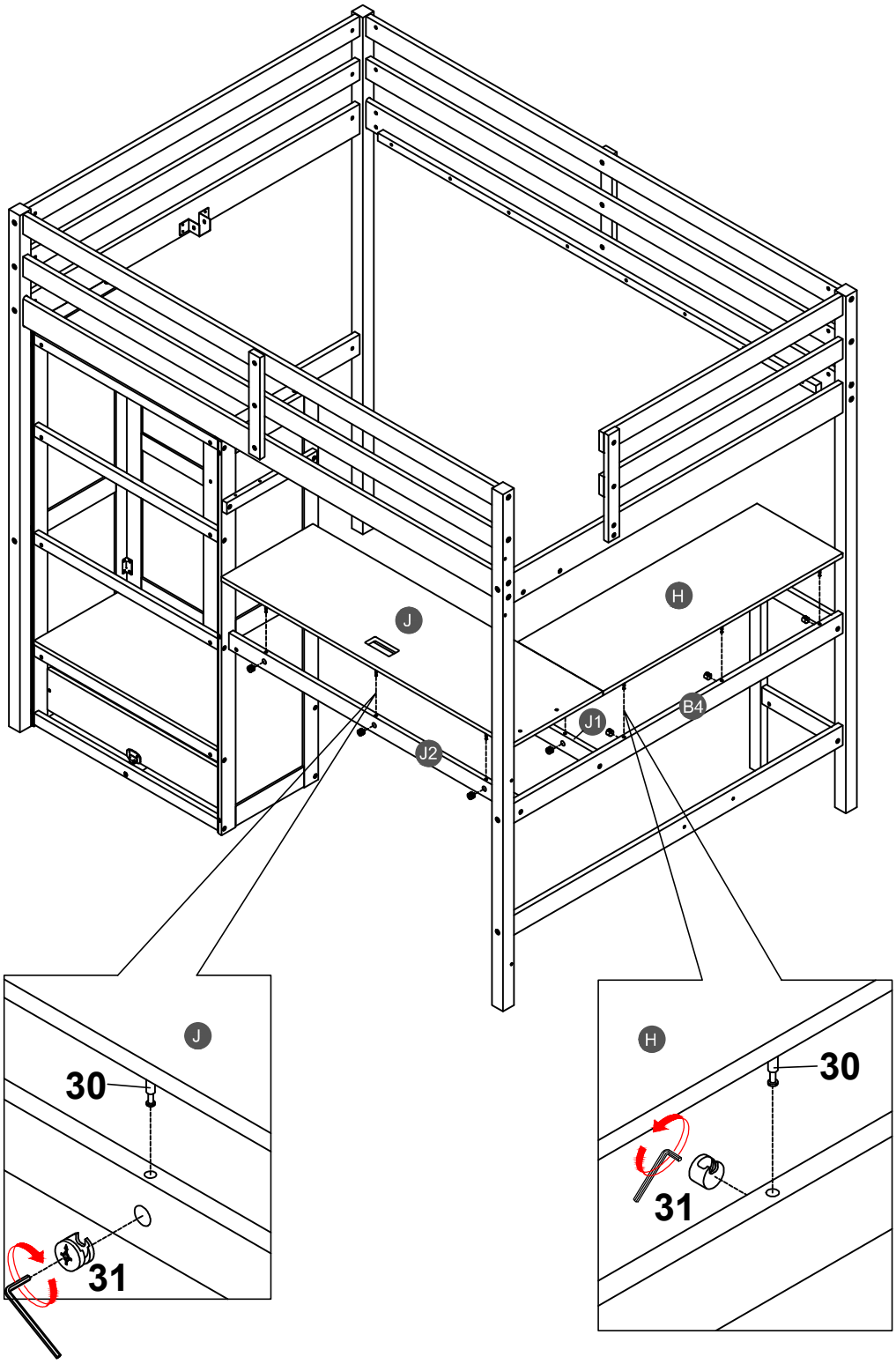

STEP 31:

6	8	10
2PCS	2PCS	2PCS

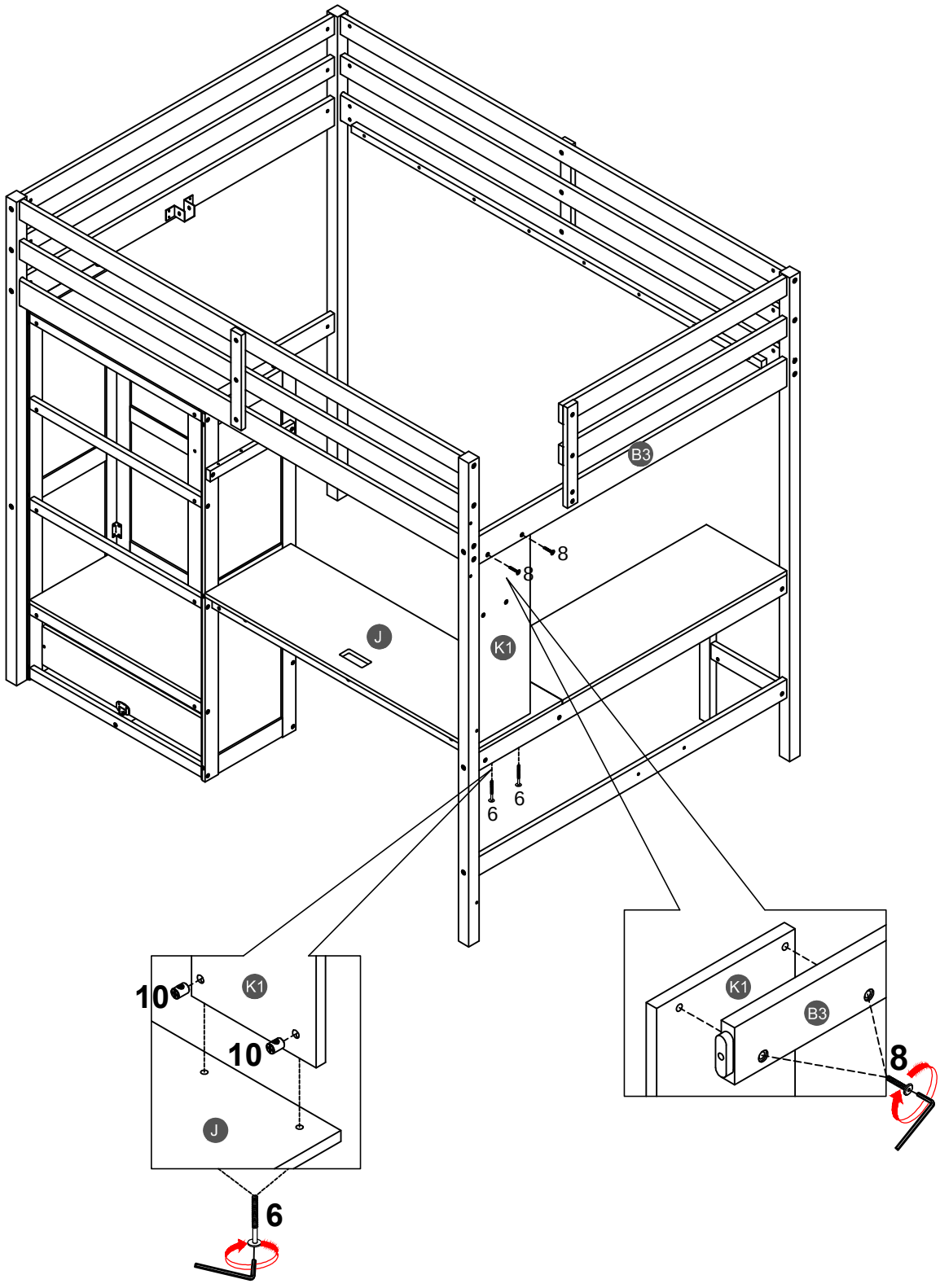

STEP 32:

6	10	13
2PCS	2PCS	2PCS

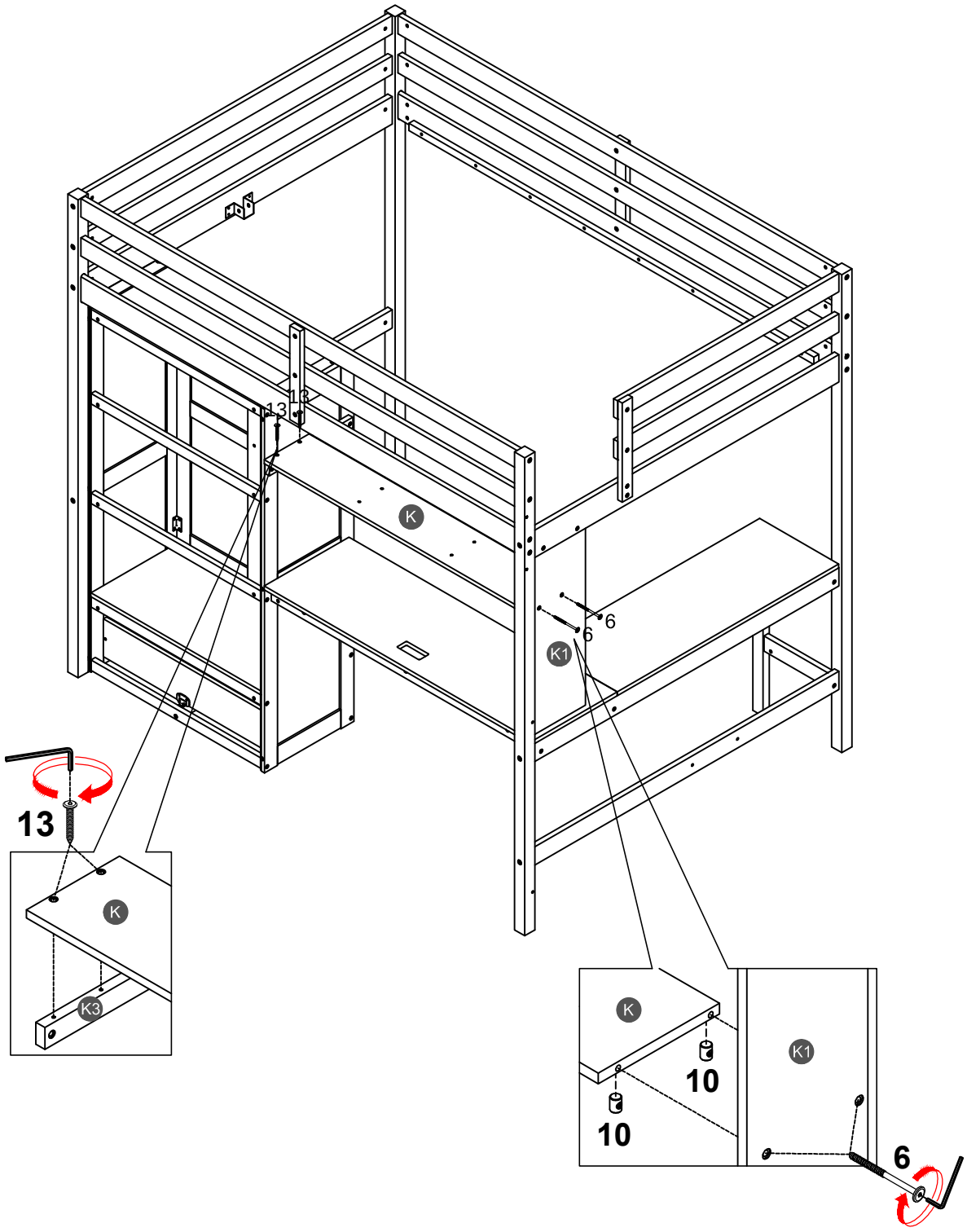

STEP 33:

6	10
4PCS	4PCS

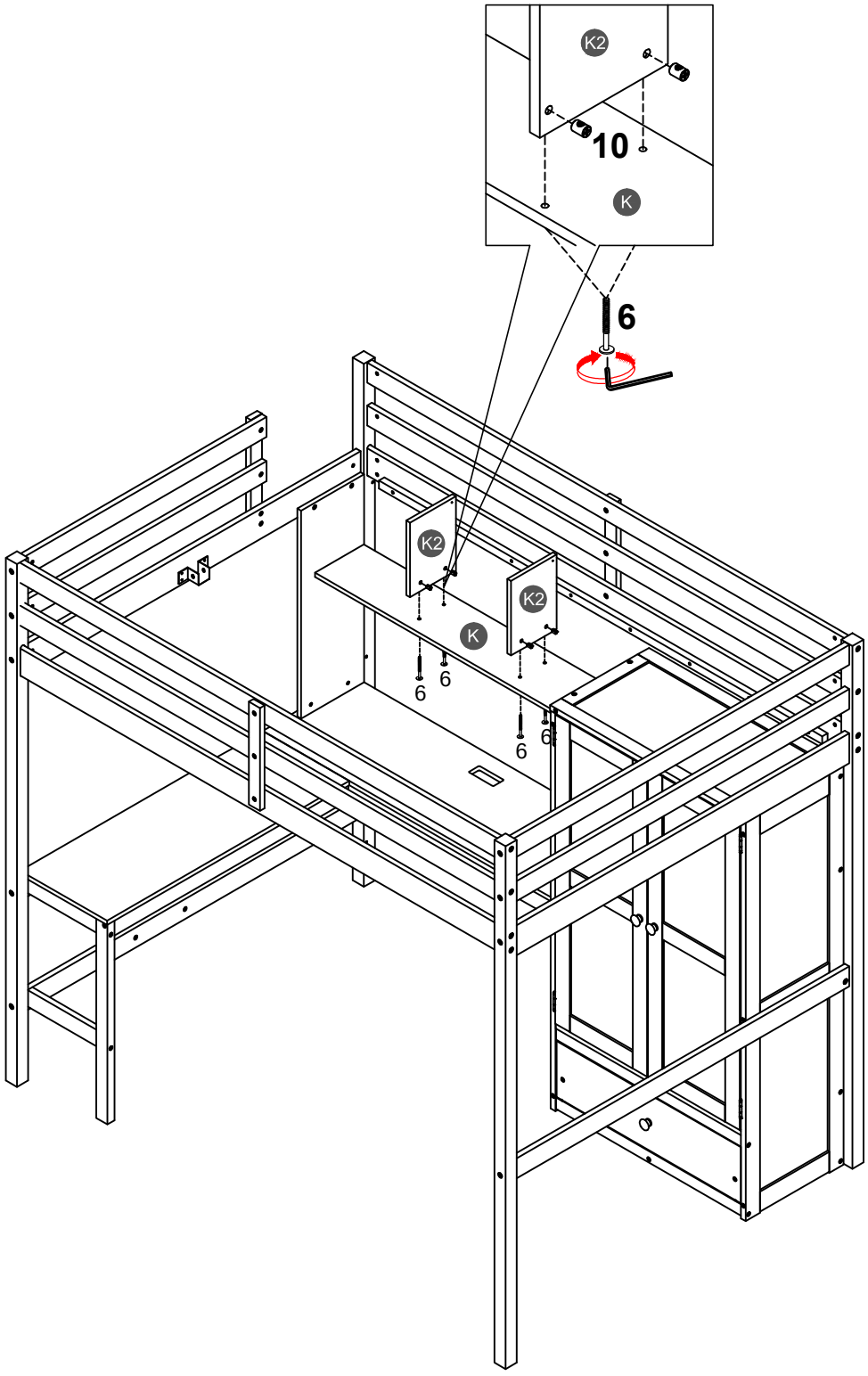

STEP 34:

15	26
4PCS	2PCS

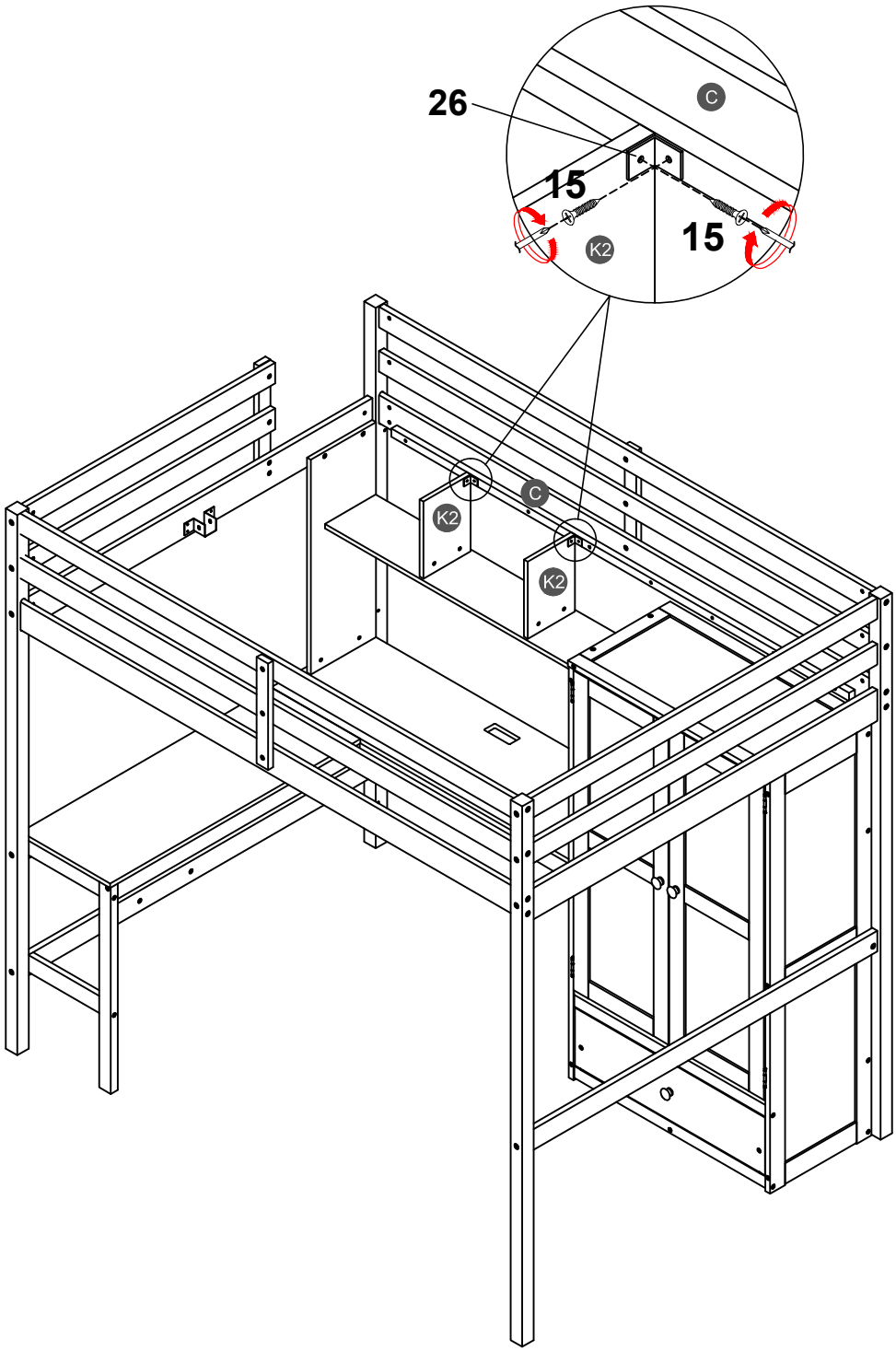

STEP 35:

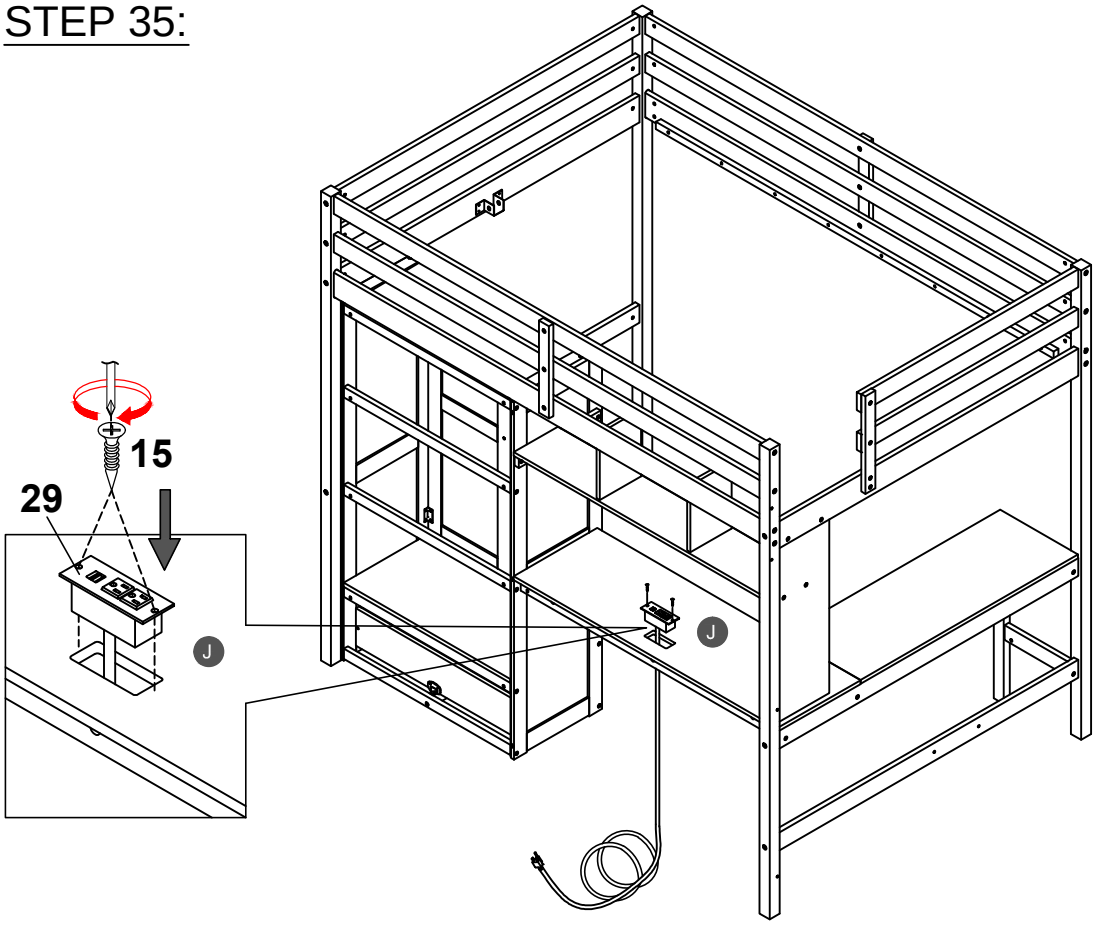

15

2PCS

29

1PC

STEP 36:

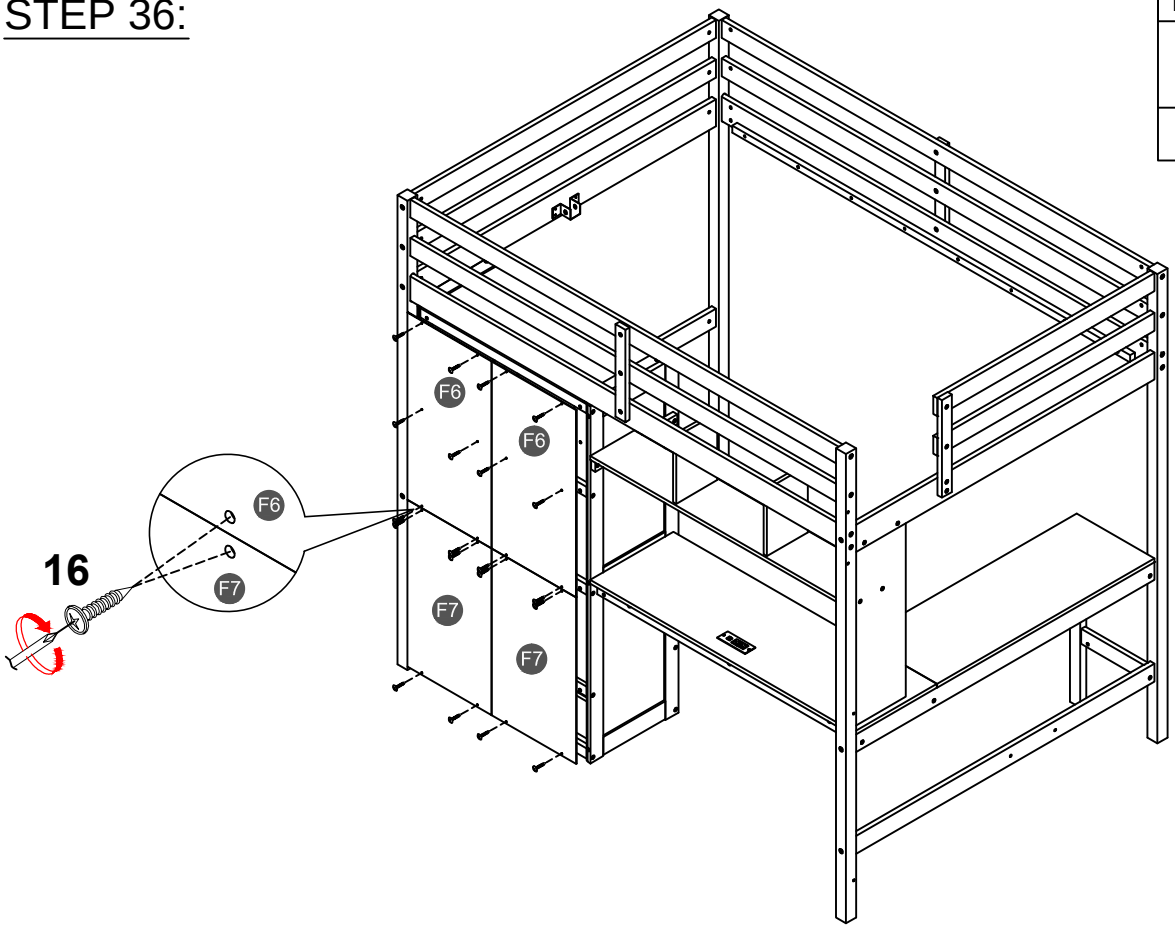

16

20PCS

STEP 37:

6	10
8PCS	8PCS

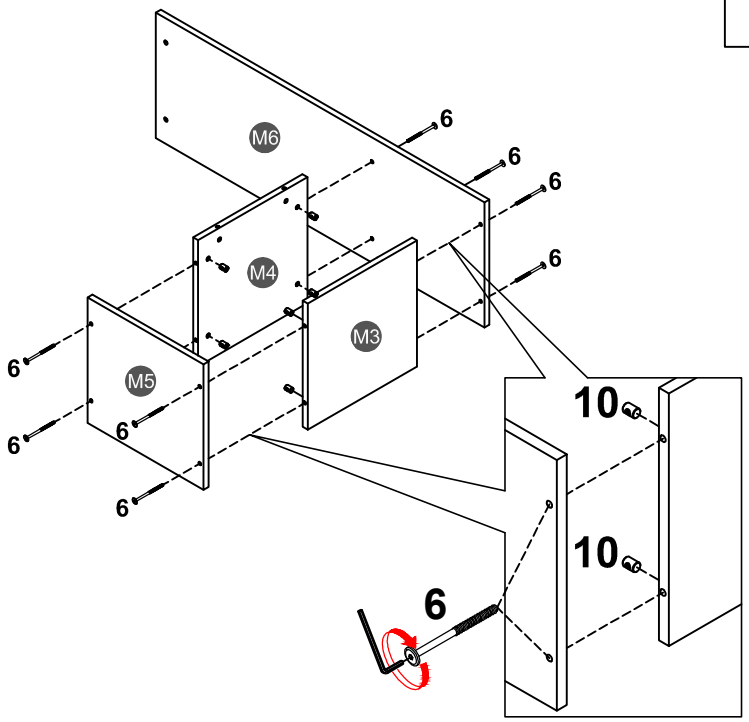

STEP 38:

3	6	10
4PCS	4PCS	4PCS

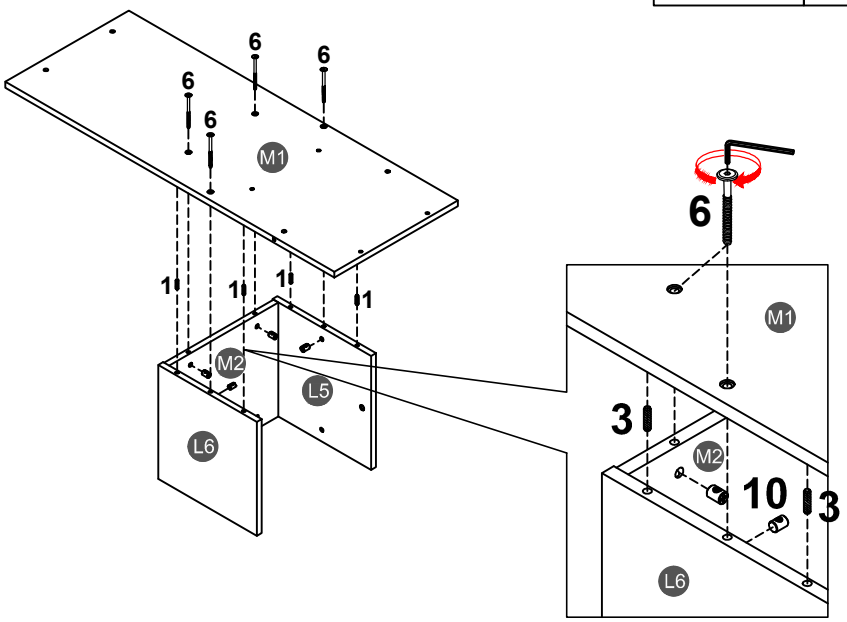

STEP 39:

6	10
2PCS	2PCS

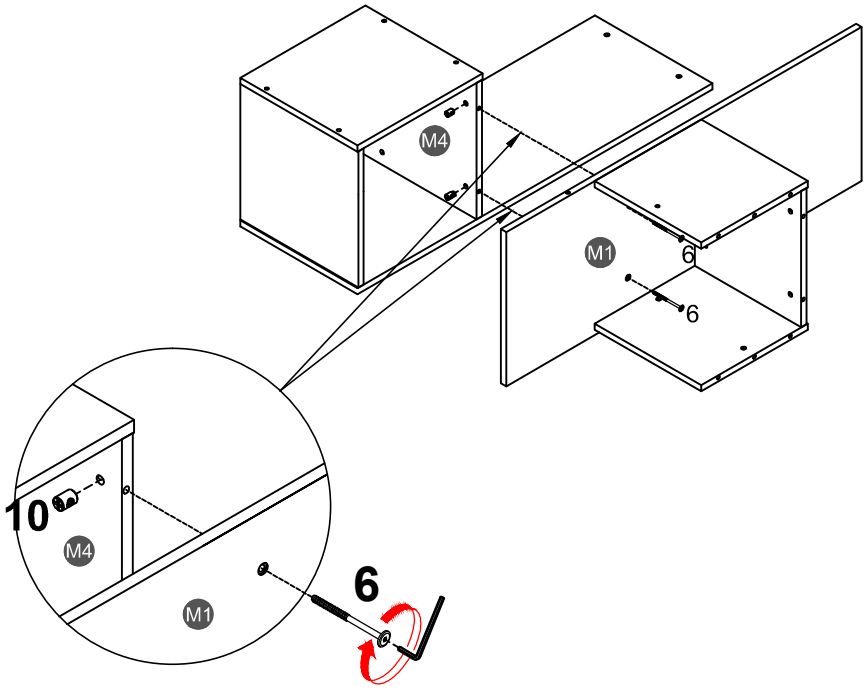

STEP 40:

3	6	10
5PCS	4PCS	4PCS

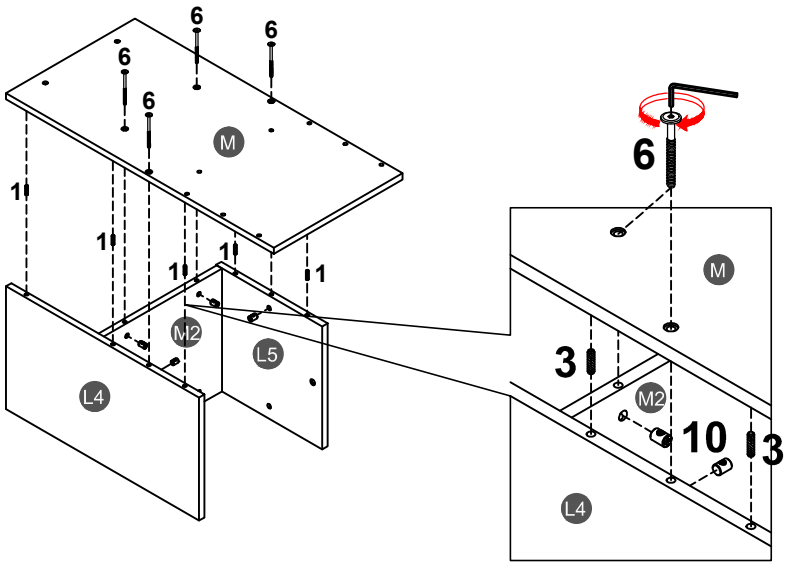

STEP 41:

3	6	10
4PCS	4PCS	4PCS

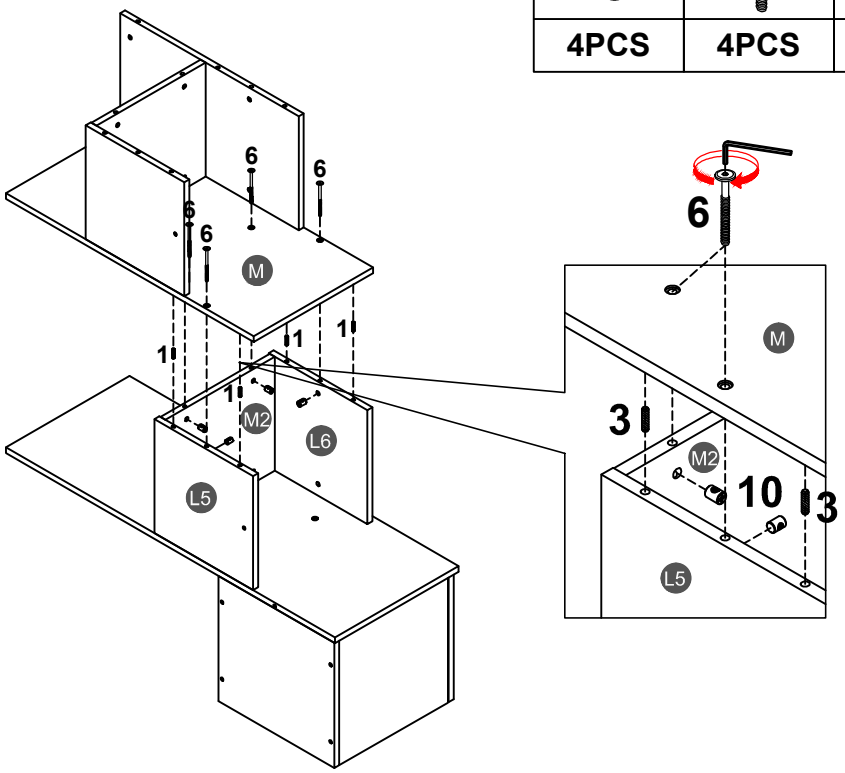

STEP 42:

3	6	10
2PCS	2PCS	2PCS

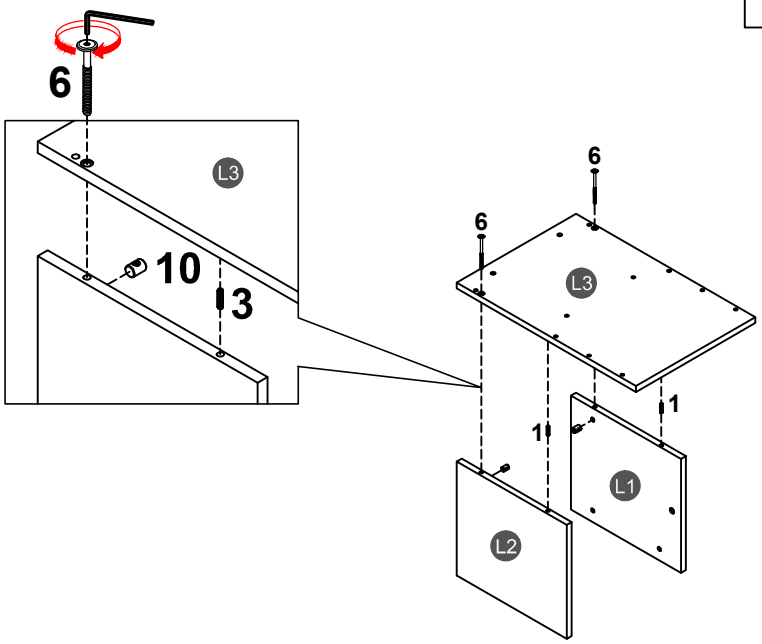

STEP 43:

3	6	10
5PCS	4PCS	4PCS

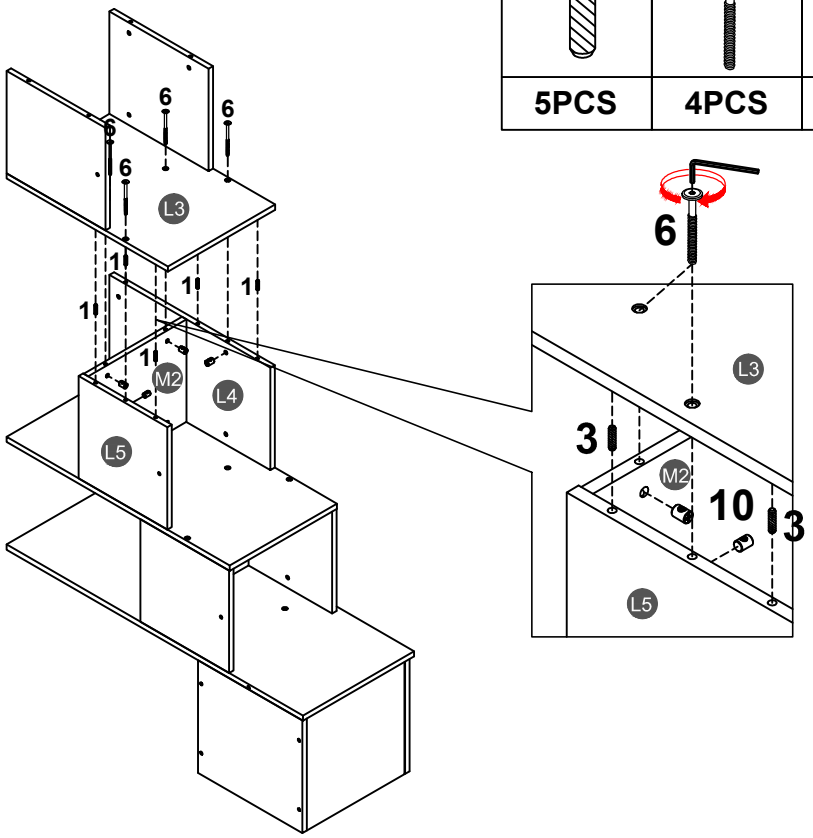

STEP 44:

6	10
4PCS	4PCS

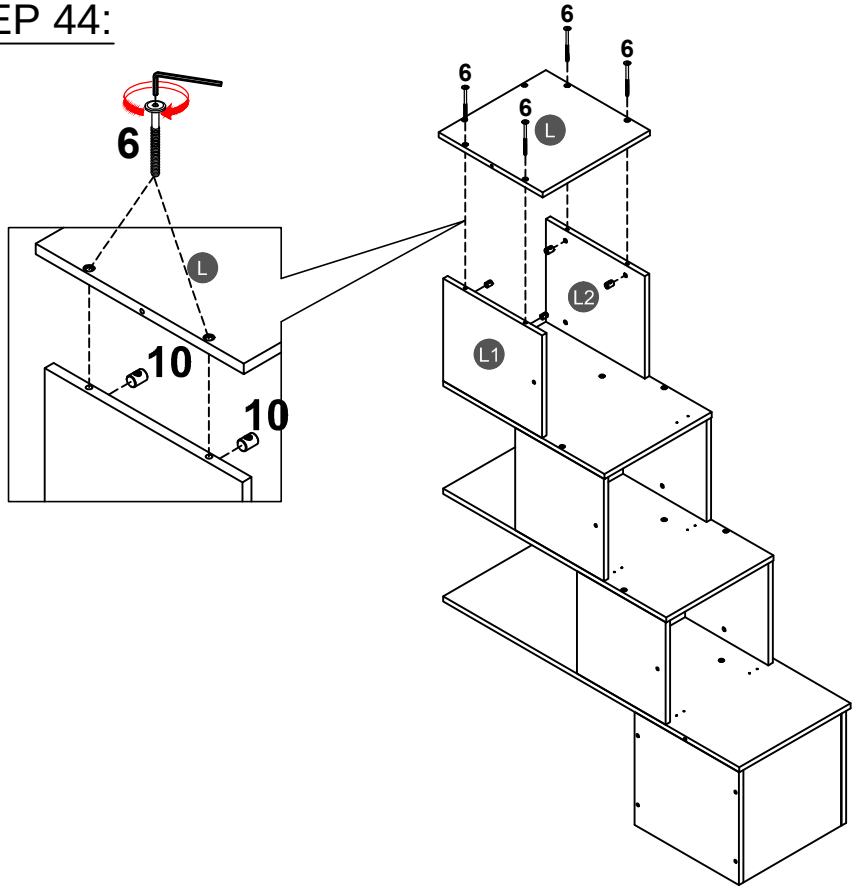

STEP 45:

6	10	13
10PCS	10PCS	2PCS

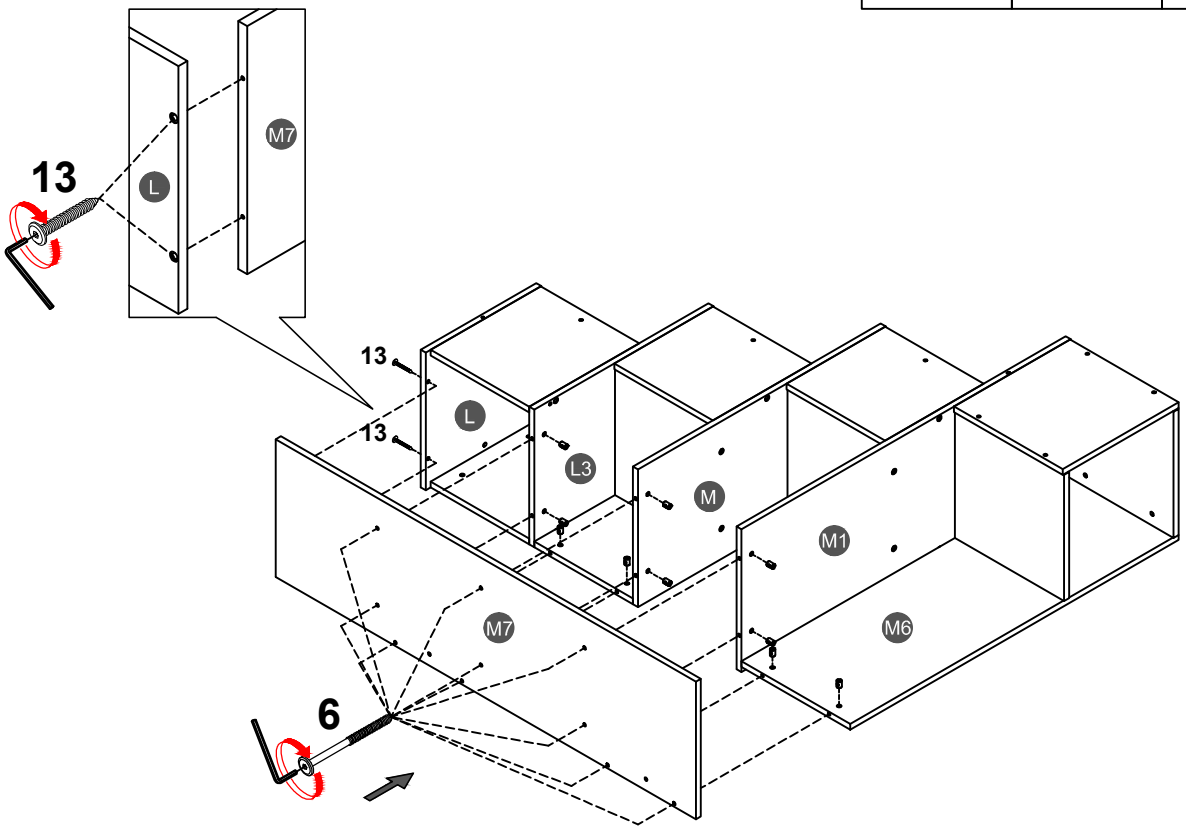

STEP 46:

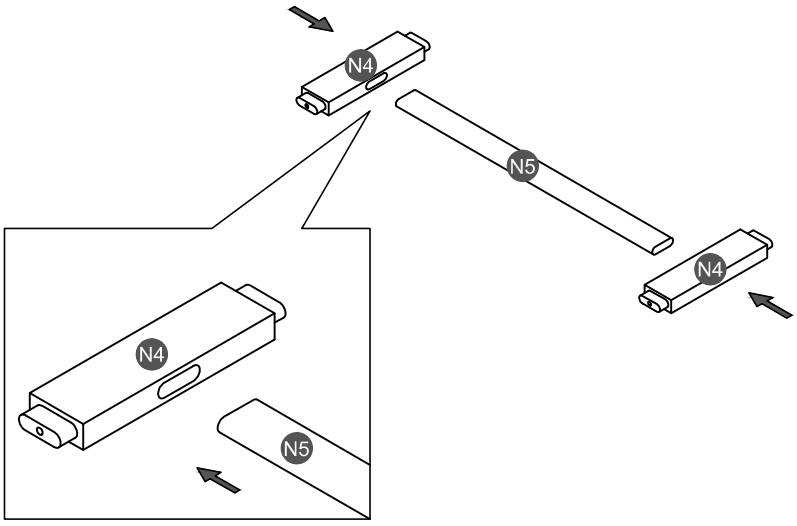

STEP 47:

6	13
1PC	4PCS

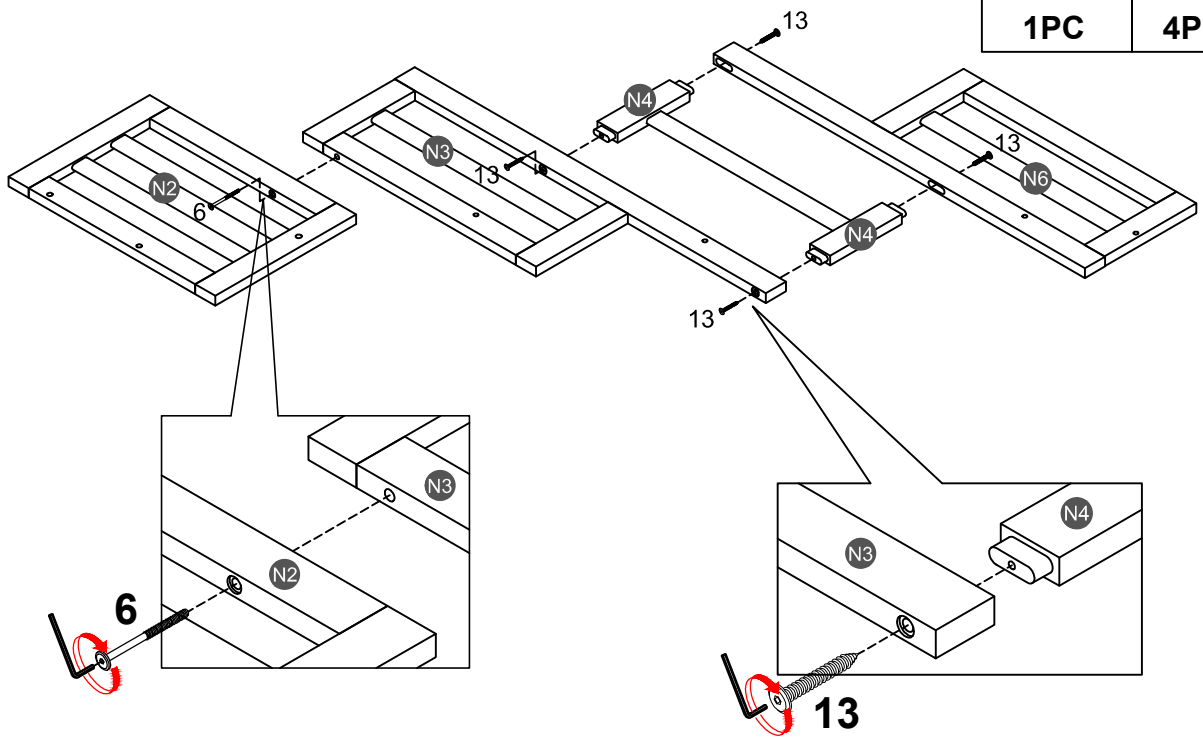

STEP 48:

6
2PCS
8
3PCS
10
2PCS

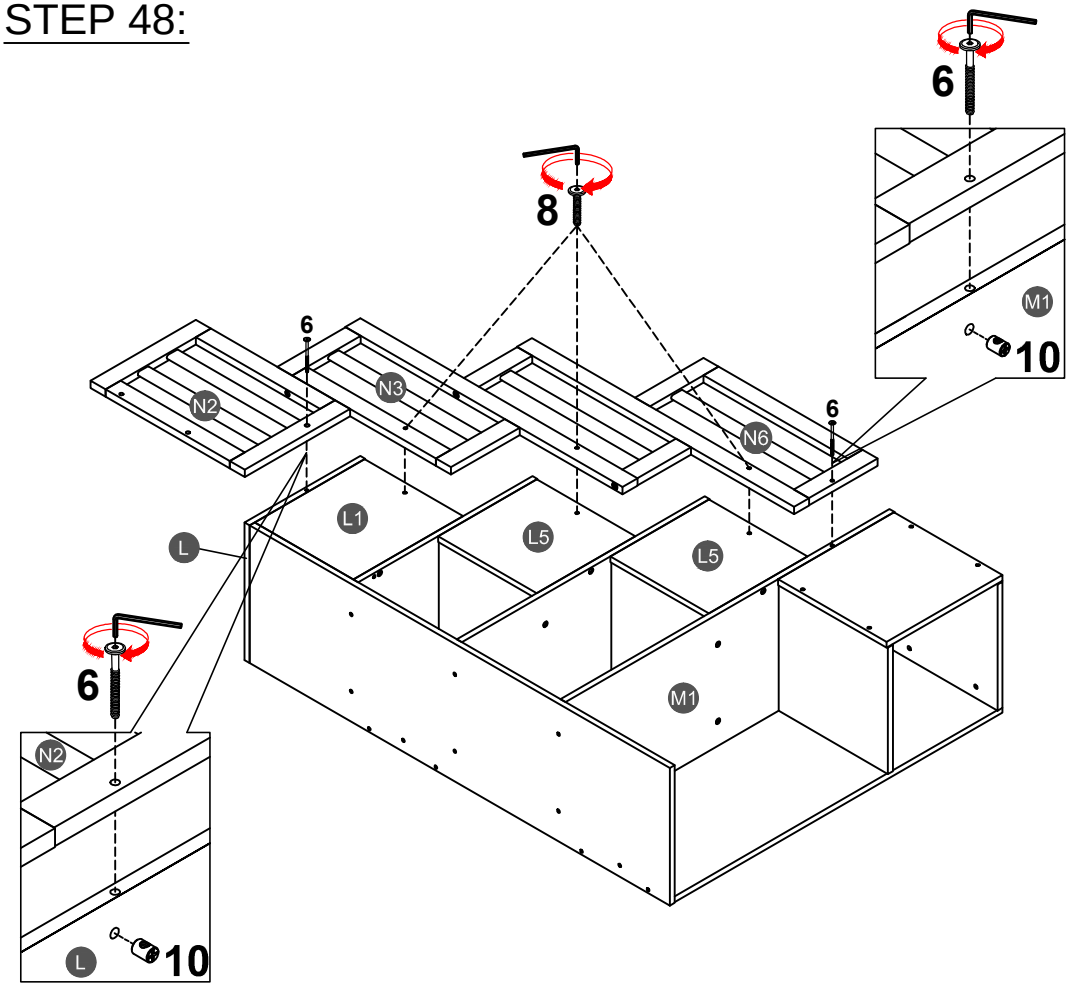

STEP 49:

5	10
2PCS	2PCS

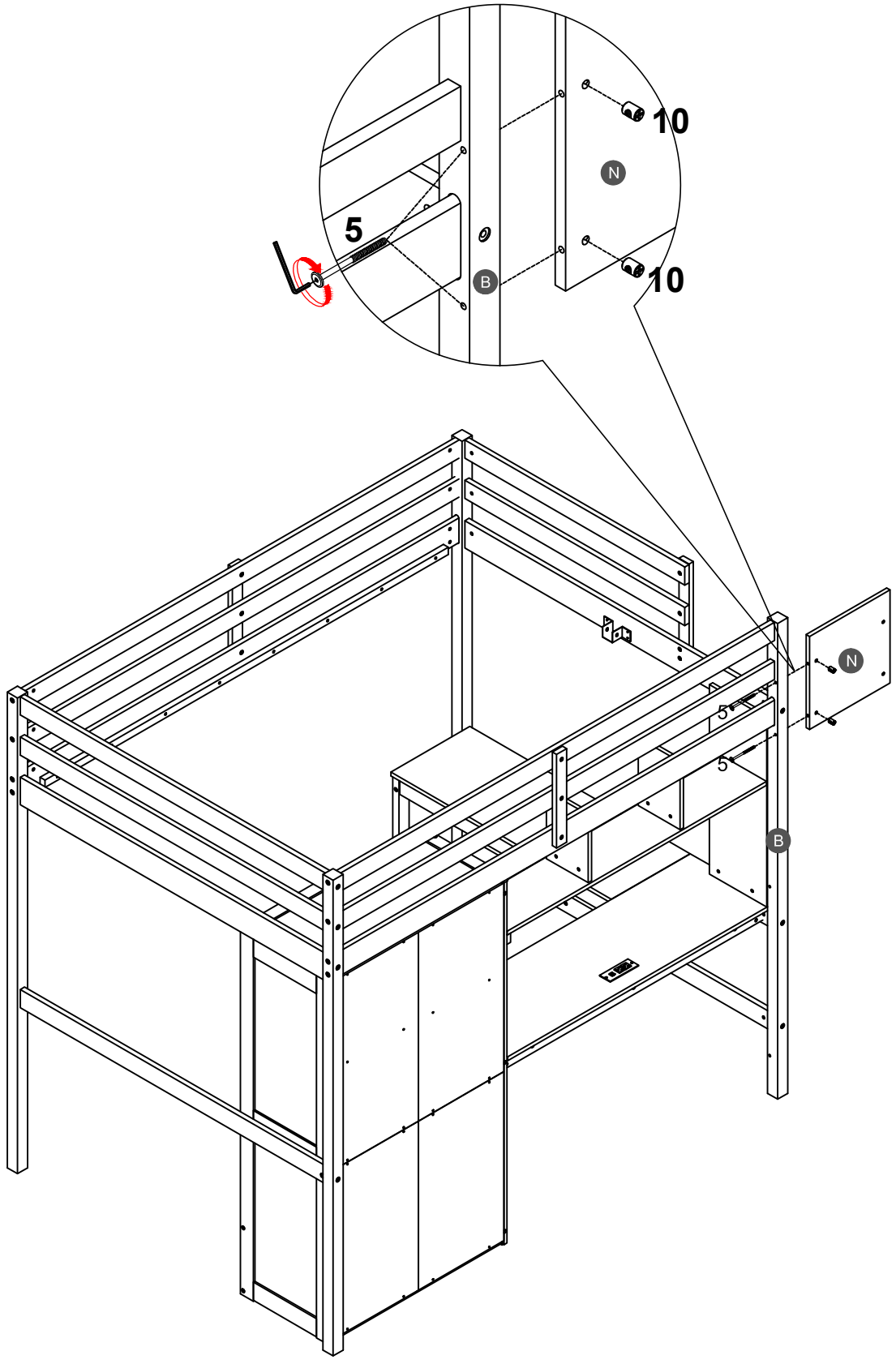

STEP 50:

6	7	10
2PCS	2PCS	4PCS

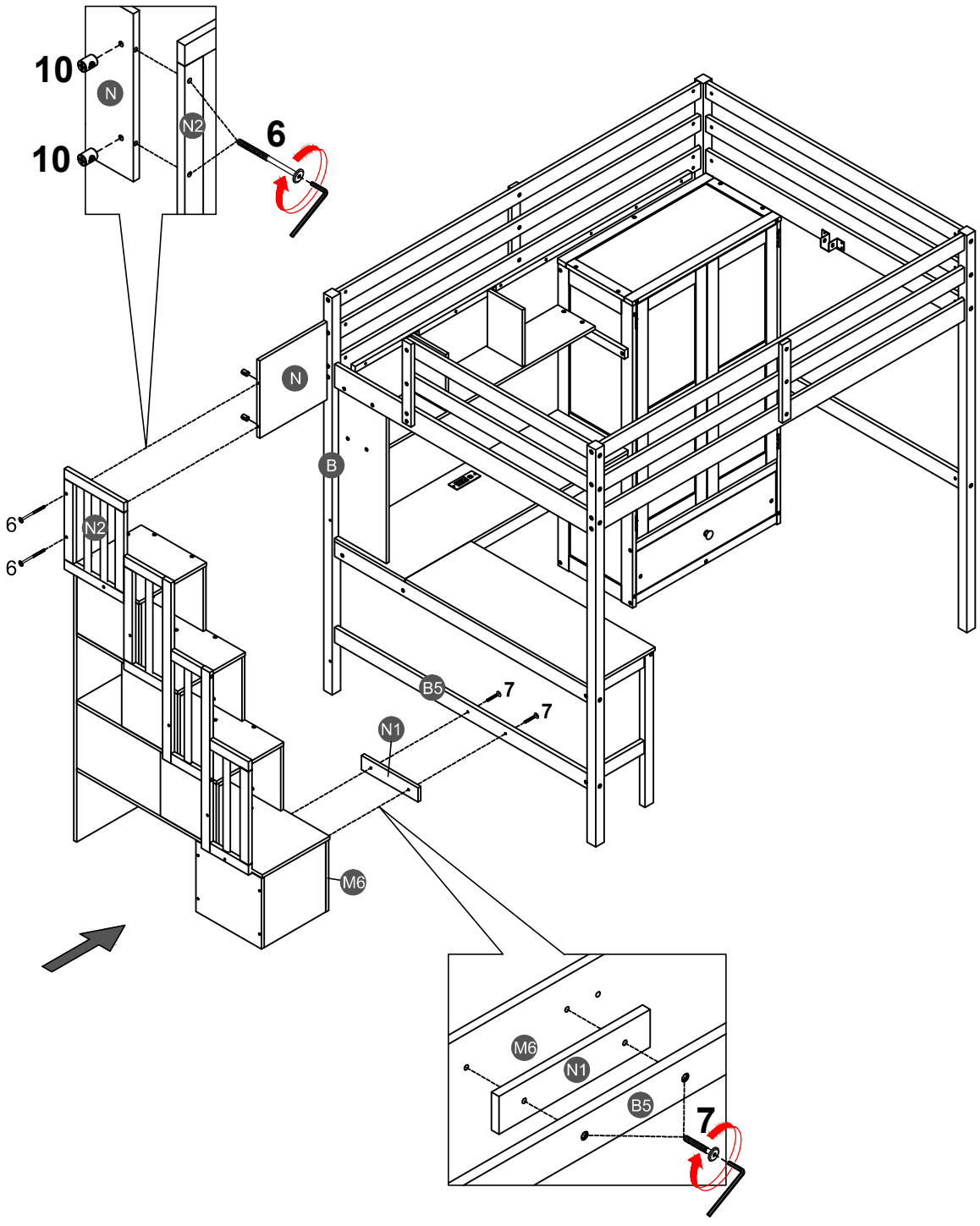

STEP 51:

5	10
2PCS	2PCS

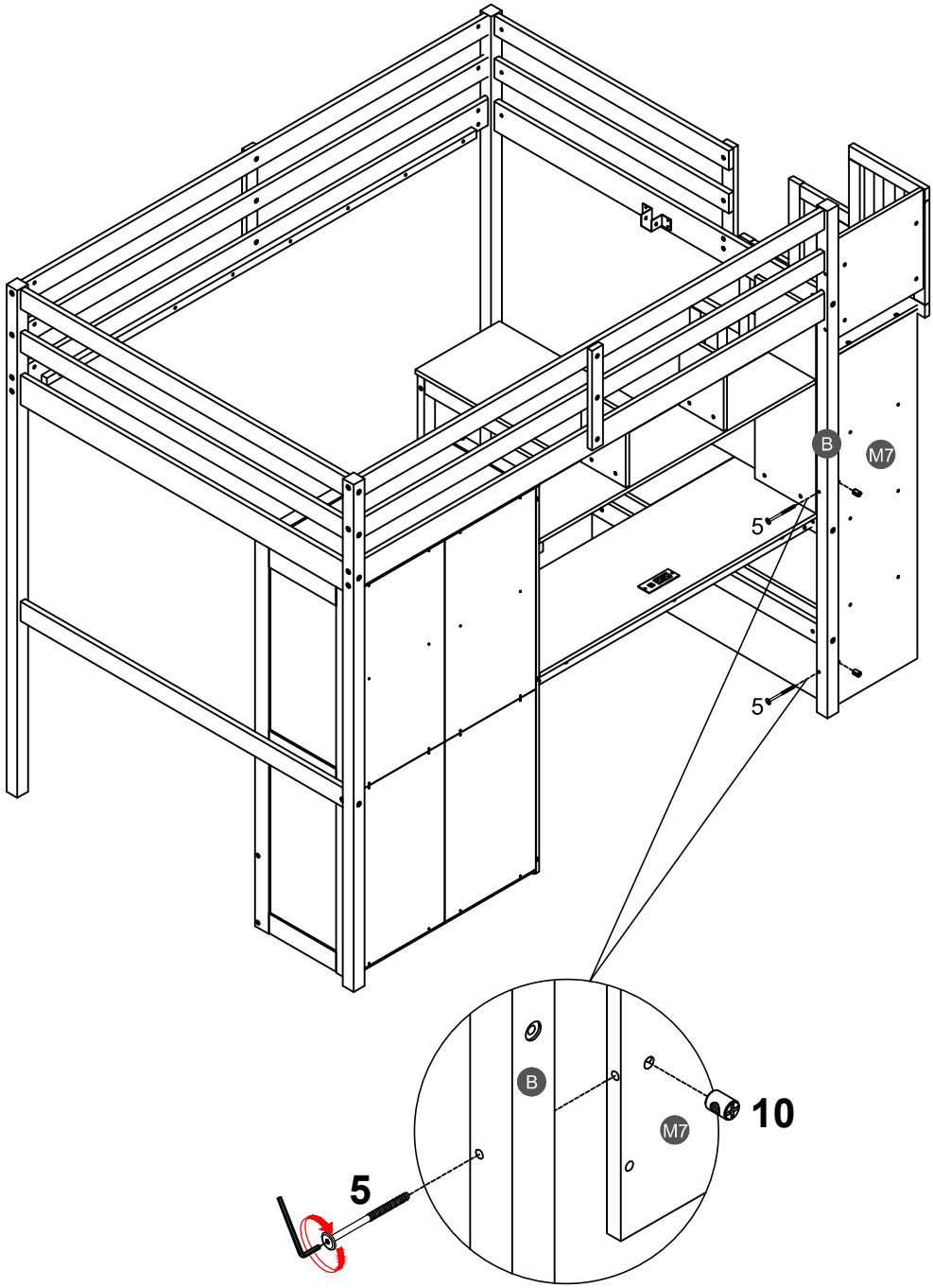

STEP 52:

7	17
2PCS	2PCS

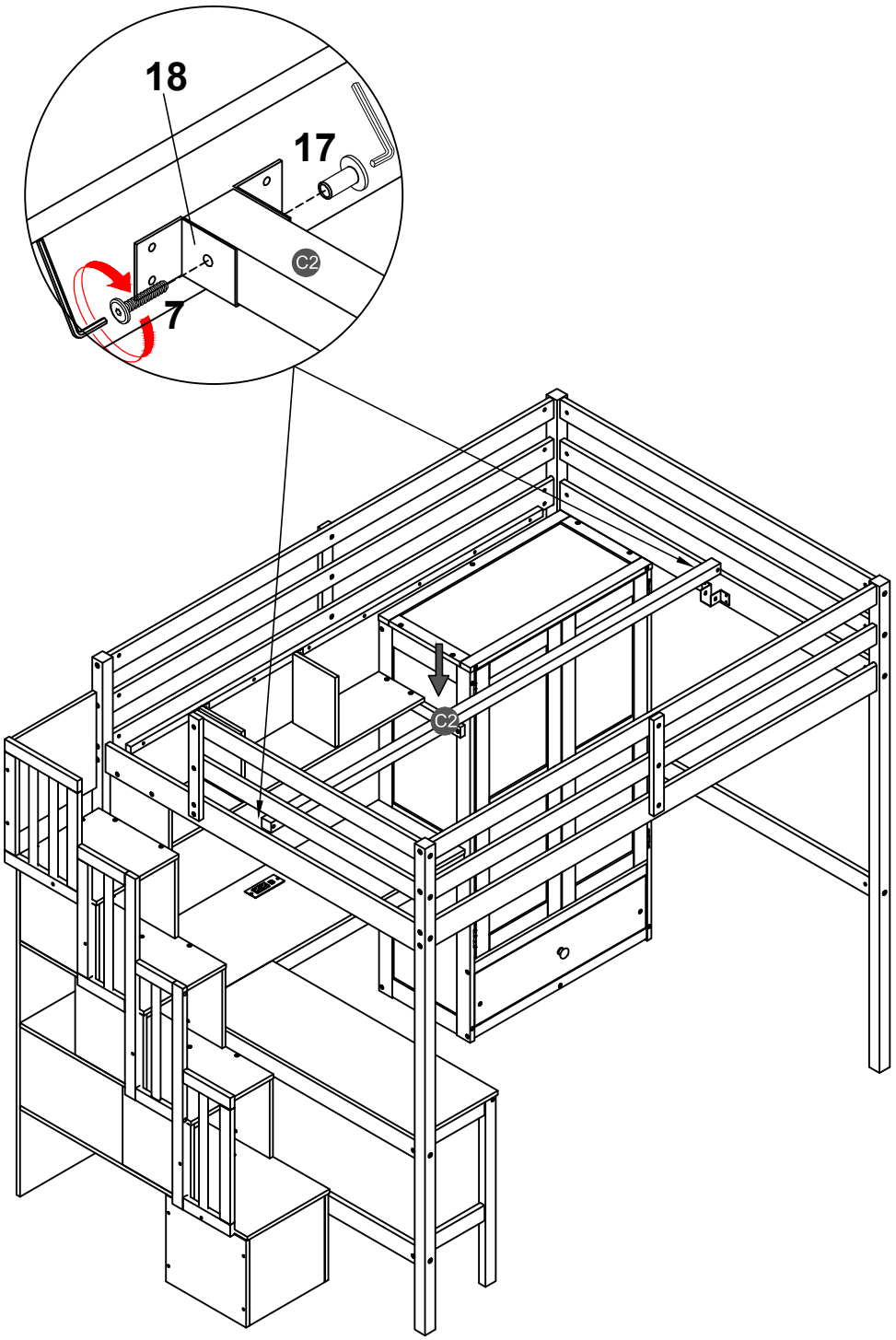

STEP 53:

14

32PCS

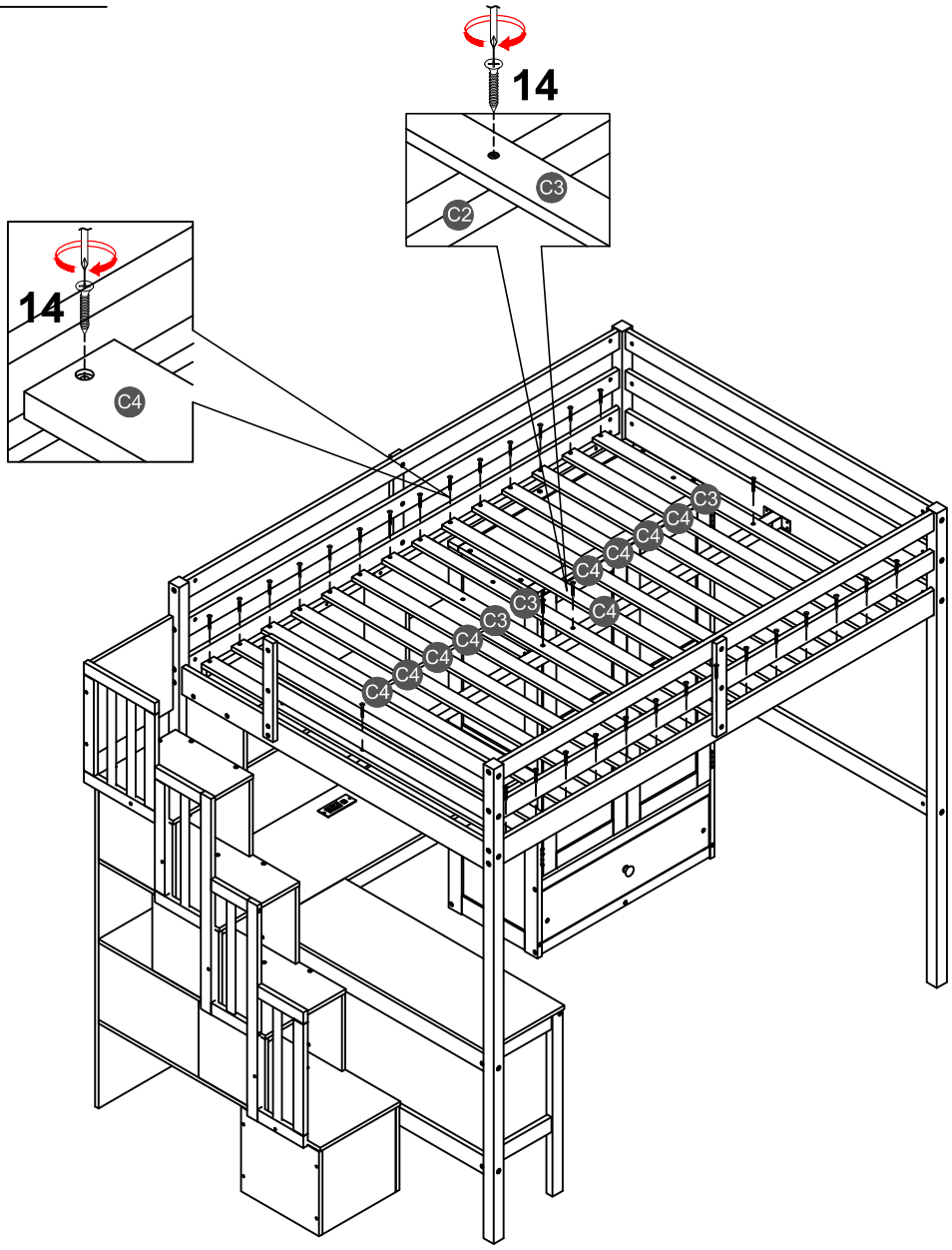

For better fixing effect, there is no pre-drilled hole on the side rails.
Please use self-tapping screws to fix it.

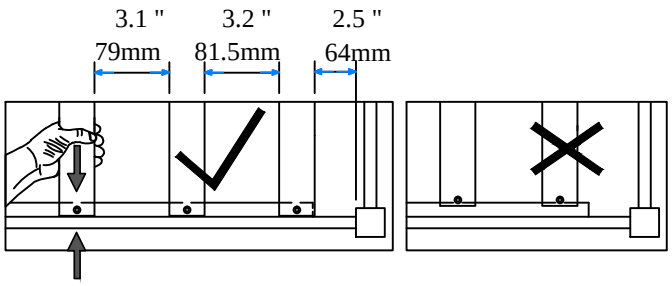

NOTE: Please make sure the bed slats close to the side rail before locking the screws to avoid breakage. This step is required for both the left and right sides. Moreover, please do not lock the screws of the bed slats at the outermost edge to avoid damaging.

