Sectional Outdoor Wicker Furniture Set
INSTRUCTIONS

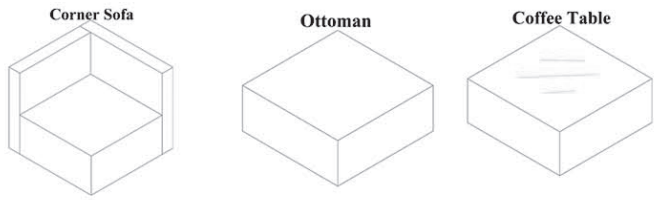



Outdoor Wicker Furniture Set Infinitely Combination 5 PCS

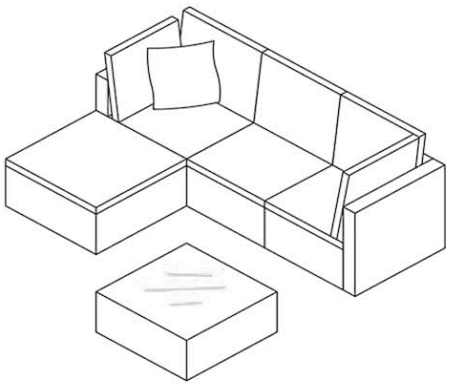

5PCS

MADE IN CHINA

A	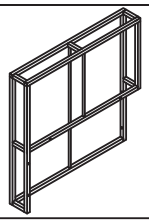	1
B	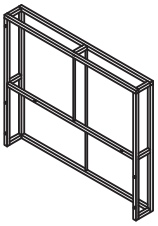	1
C	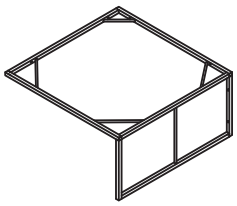	1
D	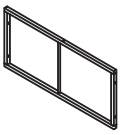	1
X	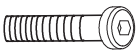 M6*35	13
Y		13
Z		1

Corner Sofa

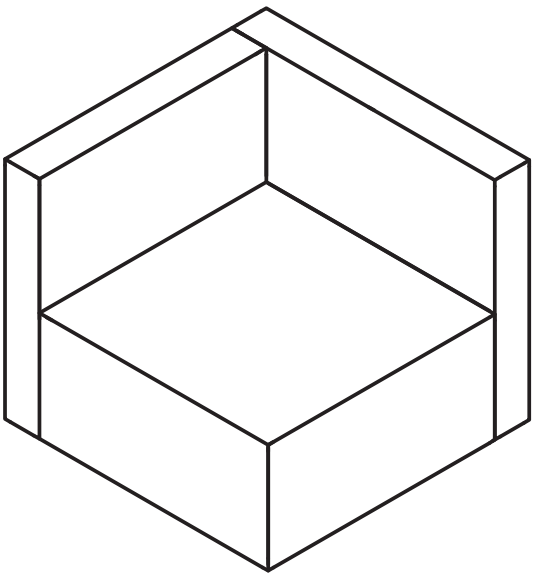

Step 1

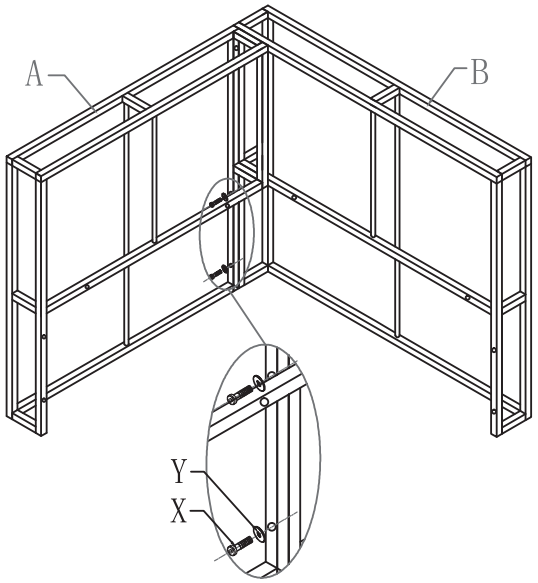

Step 2

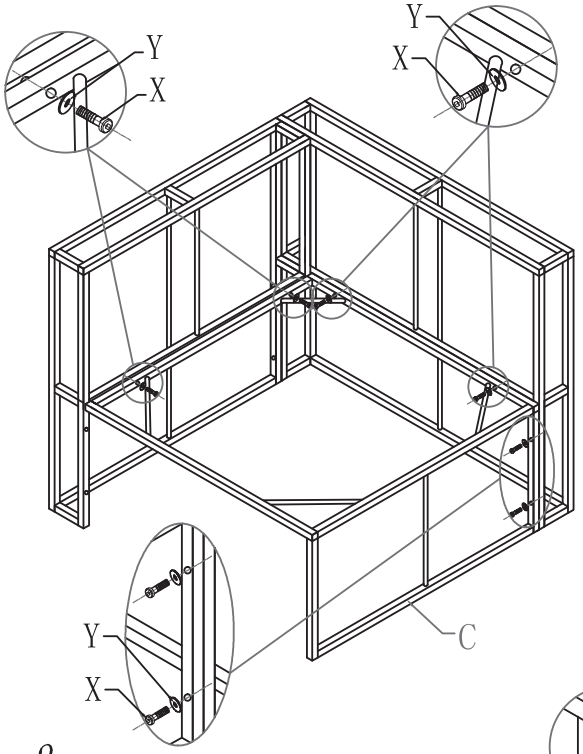

Step 3

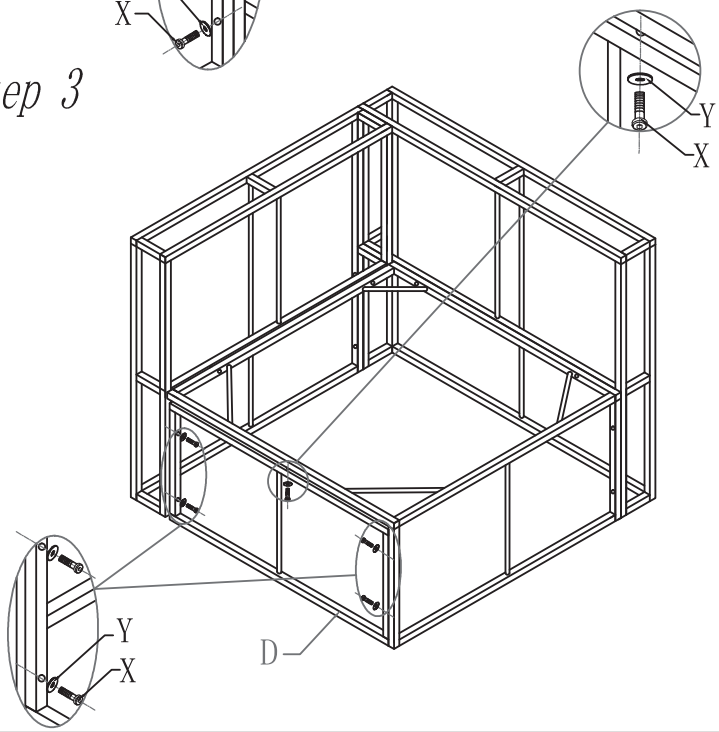

Ottoman

G2	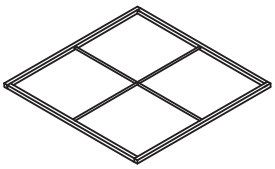	1
H	Part “H” is in the GRE2CA-LV 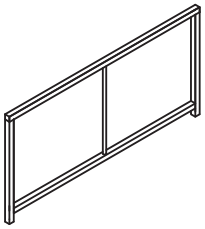	2
I2	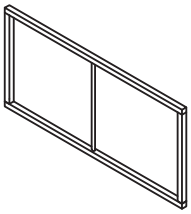	2
X	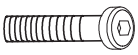 M6*35	12
Y		12

Step 1

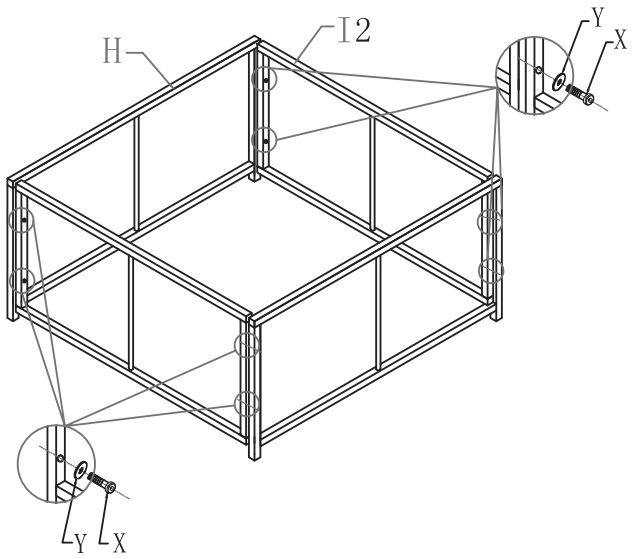

Step 2

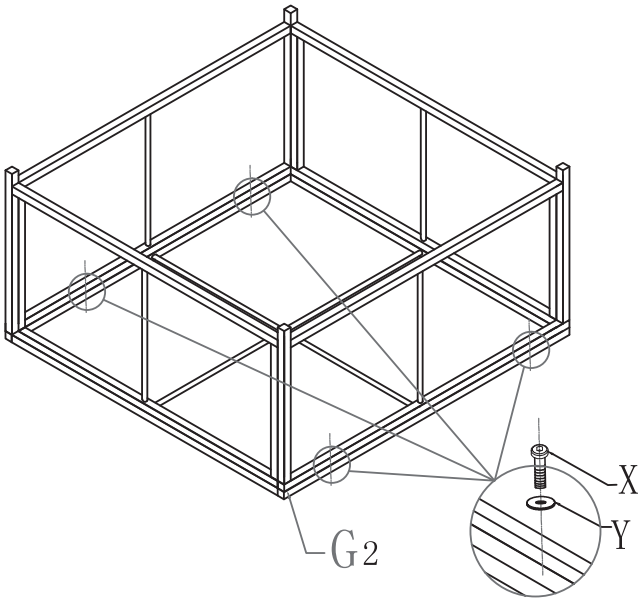

Ottoman

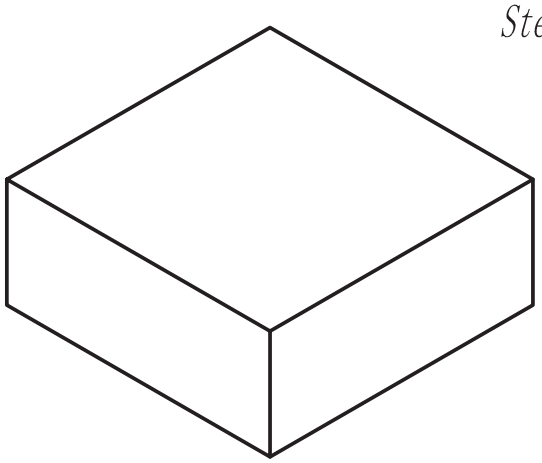

Step 3

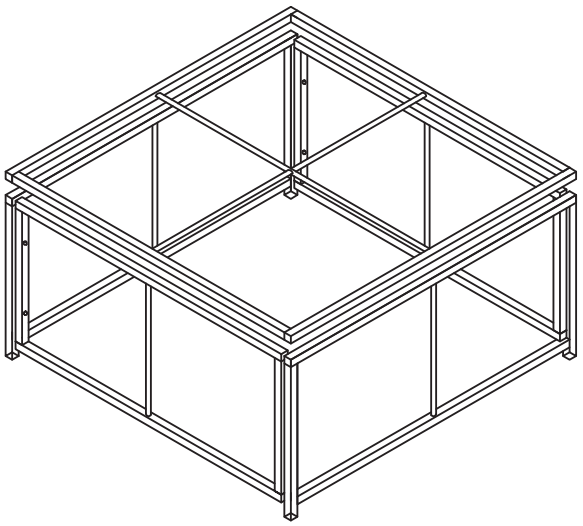

J	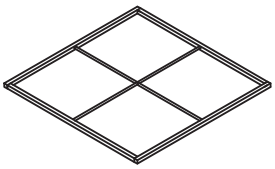	1
K	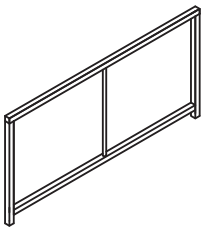	2
L	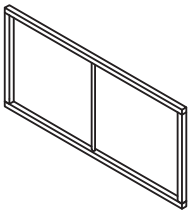	2
M	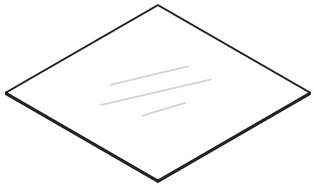	1
X	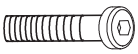 M6*35	12
Y		12

Step 1

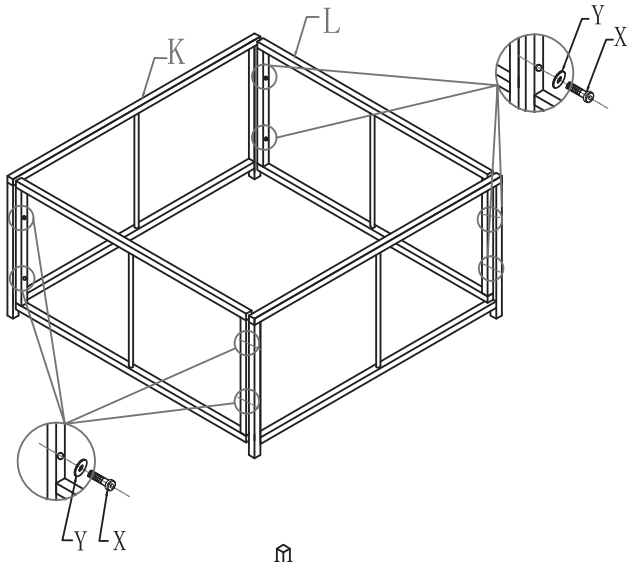

Step 2

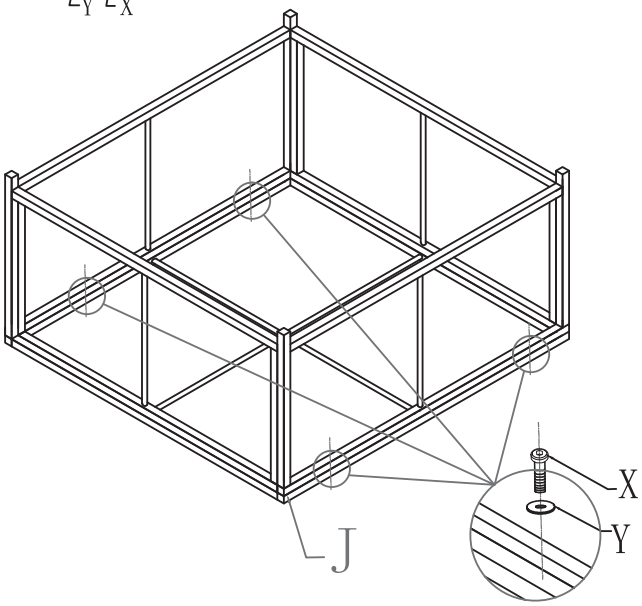

Step 3

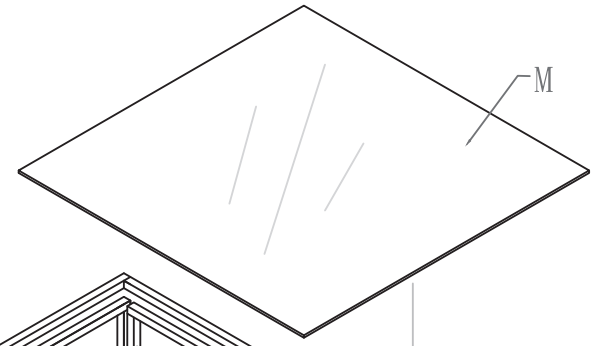

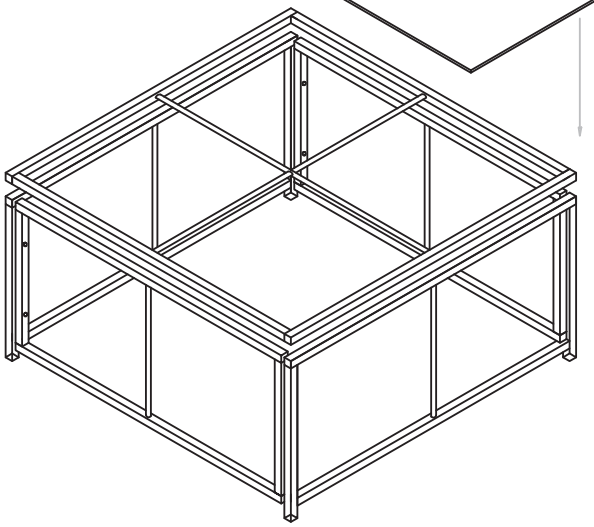

Coffee Table

