(1)X1

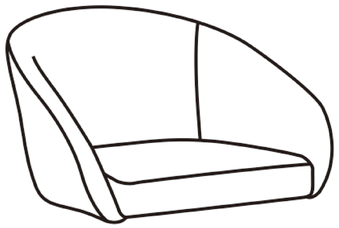

(5)X5

(2)X1

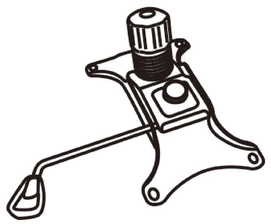

(6)X4

(3)X1

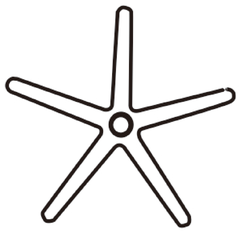

(7)X1

(4)X1

(8)X1

1

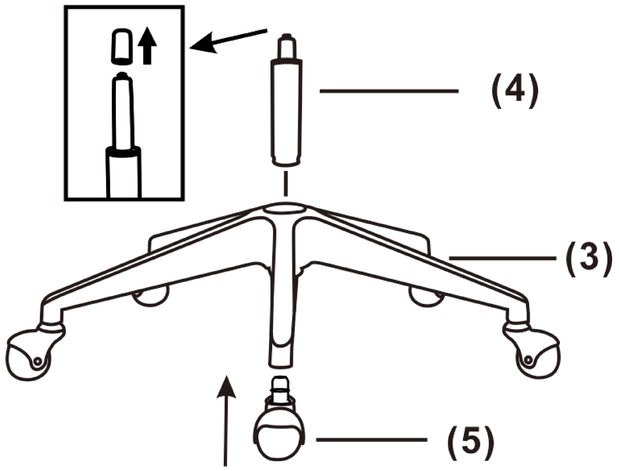

2

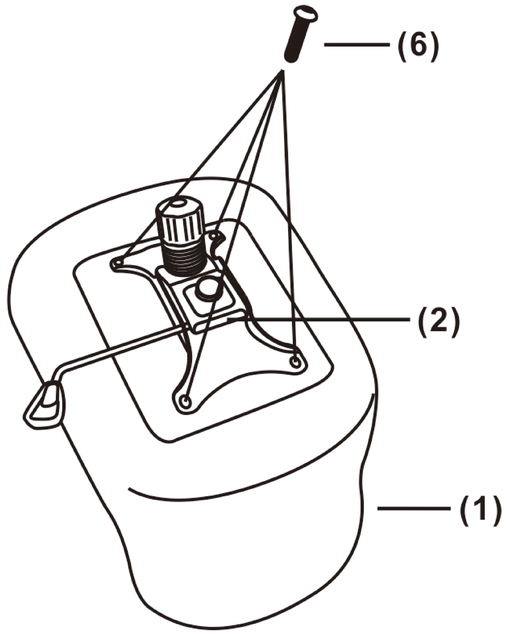

3

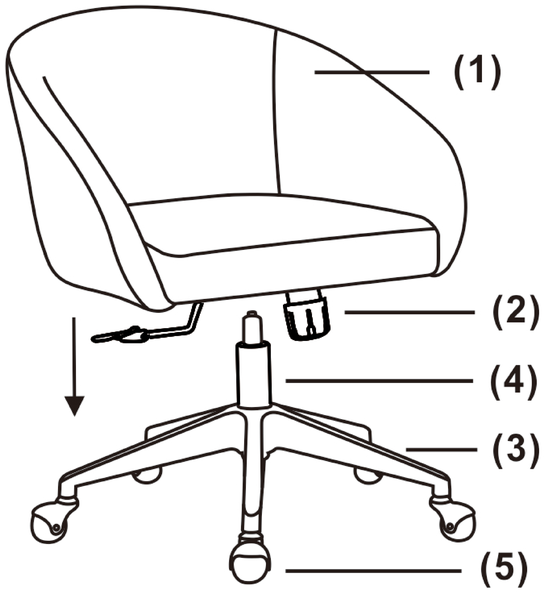

4