ASSEMBLY INSTRUCTION

ITEM NO. HKOFDK028

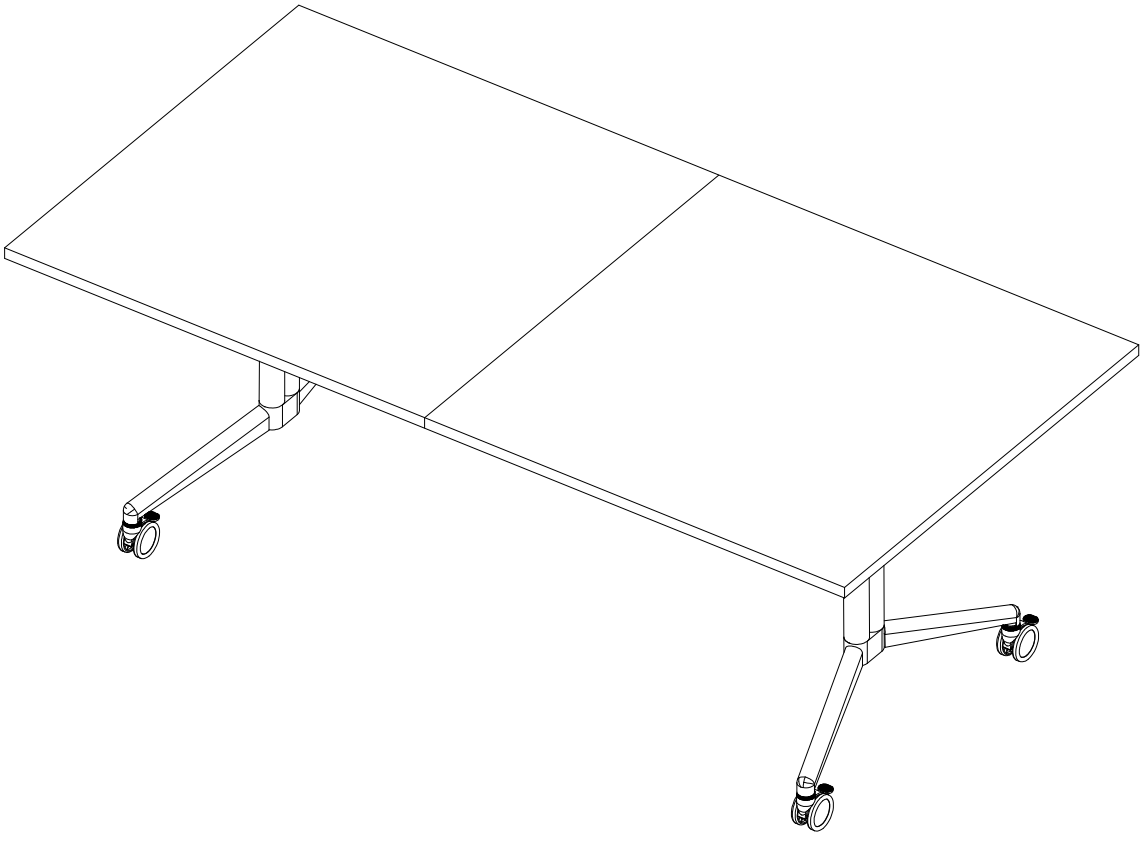

I

IMPORTANT NOTICE

Workspace Safety
Keep the workspace clear of clutter and ensure it's well-lit. A clean, flat surface is essential.

Read Instructions
Read the entire assembly guide before starting. Skipping steps can compromise safety.

Use Proper Tools
Use the tools provided or recommended. Avoid overtightening screws.

Secure Furniture
Anchor tall or heavy furniture to the wall to prevent tipping. This is crucial in homes with children or pets.

Handle Small Parts
Keep small parts away from children and pets to avoid choking hazards.

Get Help
Don't hesitate to ask for help with heavy or complex pieces.

Inspect Regularly
Periodically check for loose screws or wobbly parts and tighten as needed.

Follow these tips for a safe assembly process.



PRE-ASSEMBLY PREPARATION

Before assembly, place all furniture parts on a soft surface, such as a blanket or the original packaging cardboard, to prevent damage to the floor or components from accidental drops and to avoid scratching the surfaces.

ASSEMBLY DIAGRAM

1. Refer to the exploded view below for the approximate location of each component.
2. Each part is labeled for easy identification.
3. Follow the assembly instructions carefully to ensure proper installation.

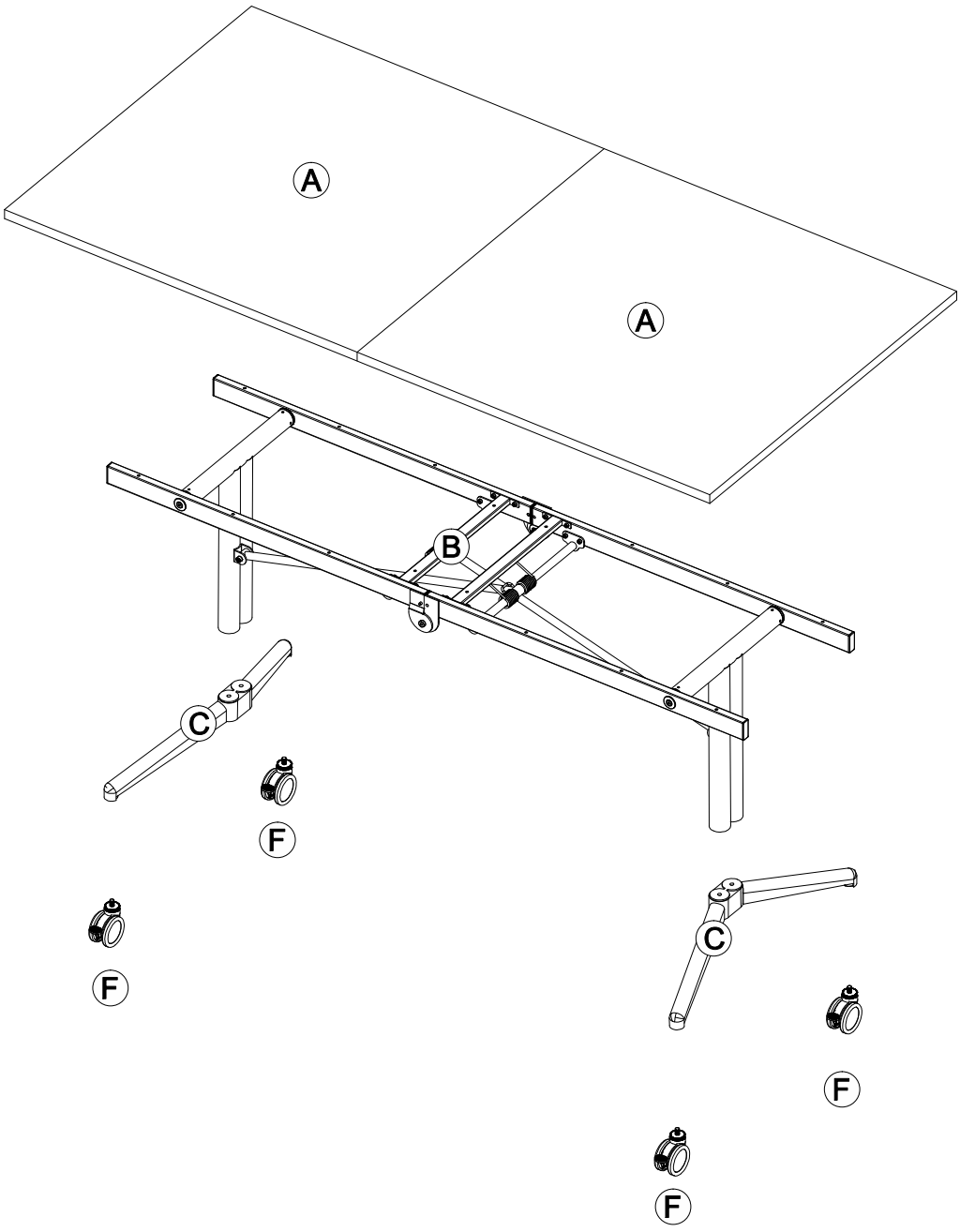

PARTS LIST

No.	Description	QTY	No.	Description	QTY
A	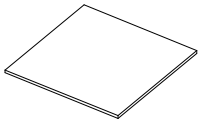	2	C	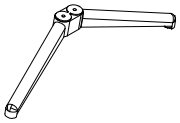	2
B	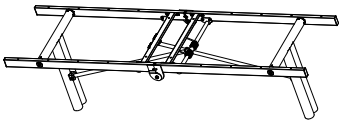	1			

HARDWARE LIST

No.	Description	QTY	No.	Description	QTY
D	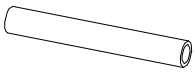	1	M	 M8*20H	2
E		4	N	 M10*60H	4
F		4	O	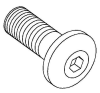 M6*65H	12
G	 M8 wrench	1	P	 M6*30H	4
H	 M5 wrench	1	Q	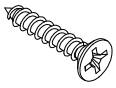 ST4.2*25	12
I	 M4 wrench	1	R	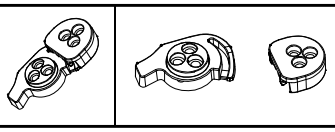	2
J	 Φ20*10.5*2mm	2	S		1
K		2			
L	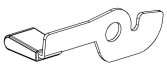	1			

CAUTION: Please confirm the parts list before installation.

YOU MAY NEED (NOT SUPPLIED)

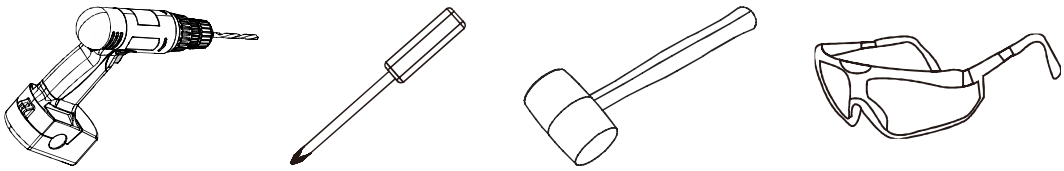

1

D	E	F	G	N
1PCS	4PCS	4PCS	1PCS	4PCS

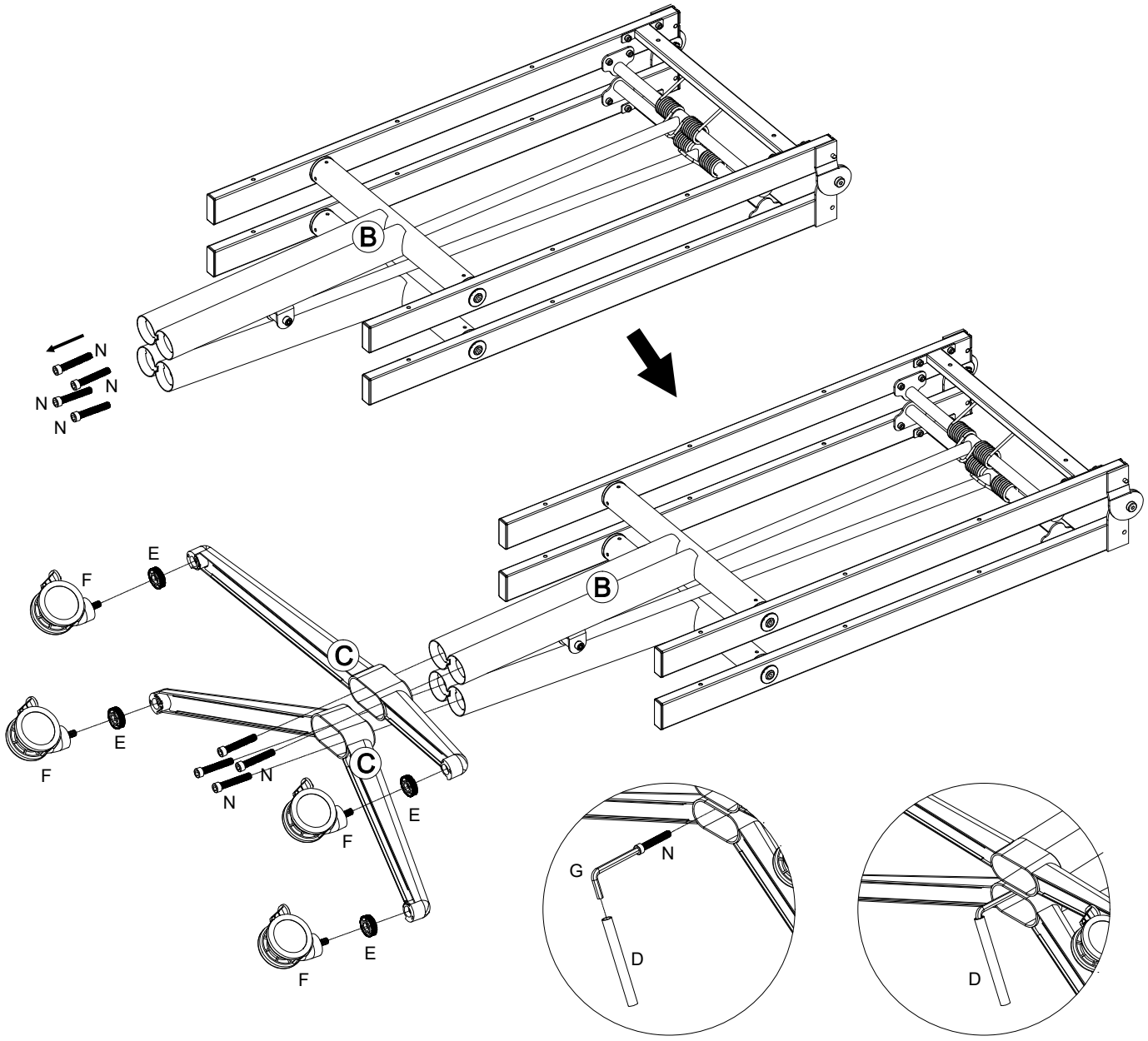

1. Screw N has been pre-assembled on table frame B, please screw it out before full installation.
2. Tighten the cover E and the universal wheel F so that it is fixed on the table foot C
3. Fix the table foot C to the table frame B through the bolt N and tighten it with an M8 wrench

2

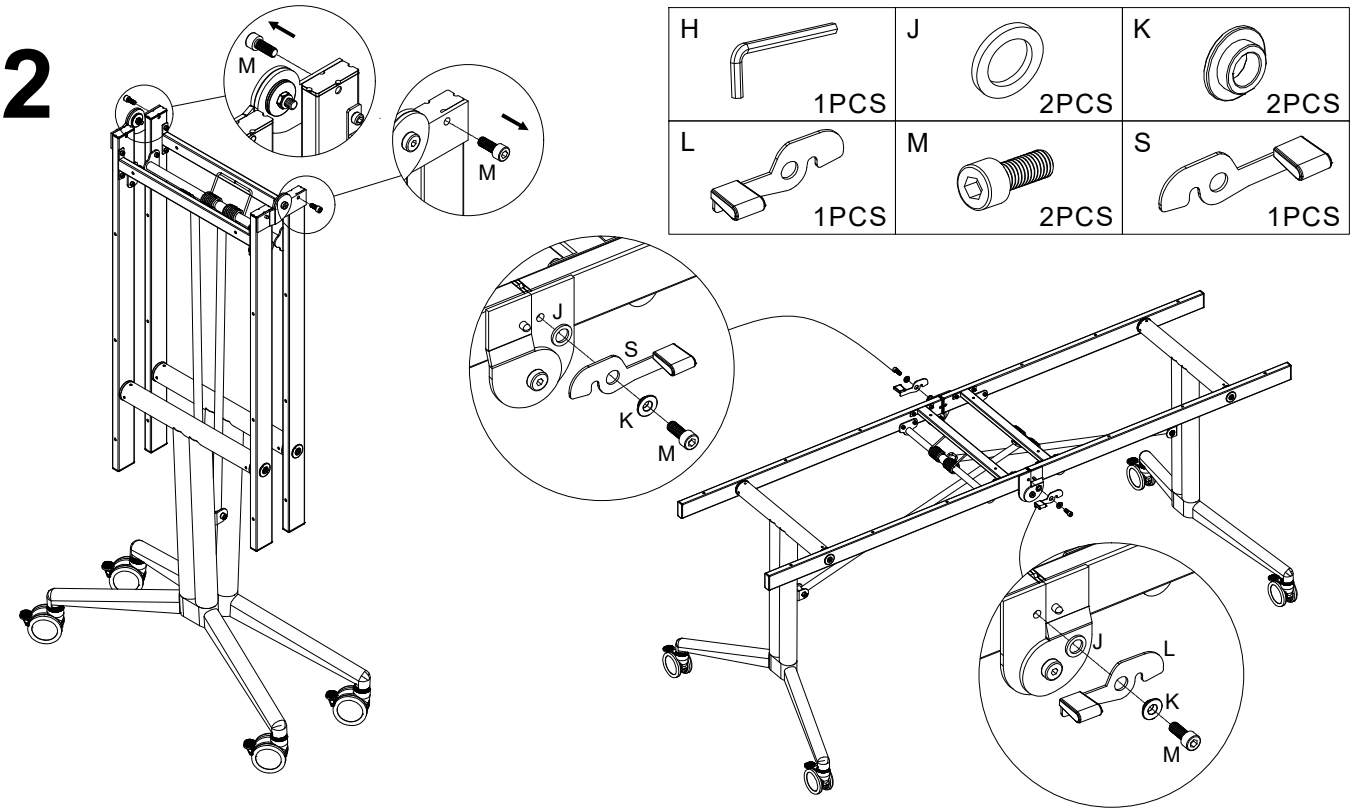

H	J	K
1PCS	2PCS	2PCS
L	**M**	**S**
1PCS	2PCS	1PCS

1, Screw M has been pre-assembled on table frame B, please screw it out before full installation.
2, Use the M5 wrench H to tight / fix the accessory J,S,K with bolt M, please see the detail view for better illustration. Repeat the same process for the opposite.

3

O	P	I
12PCS	4PCS	1PCS

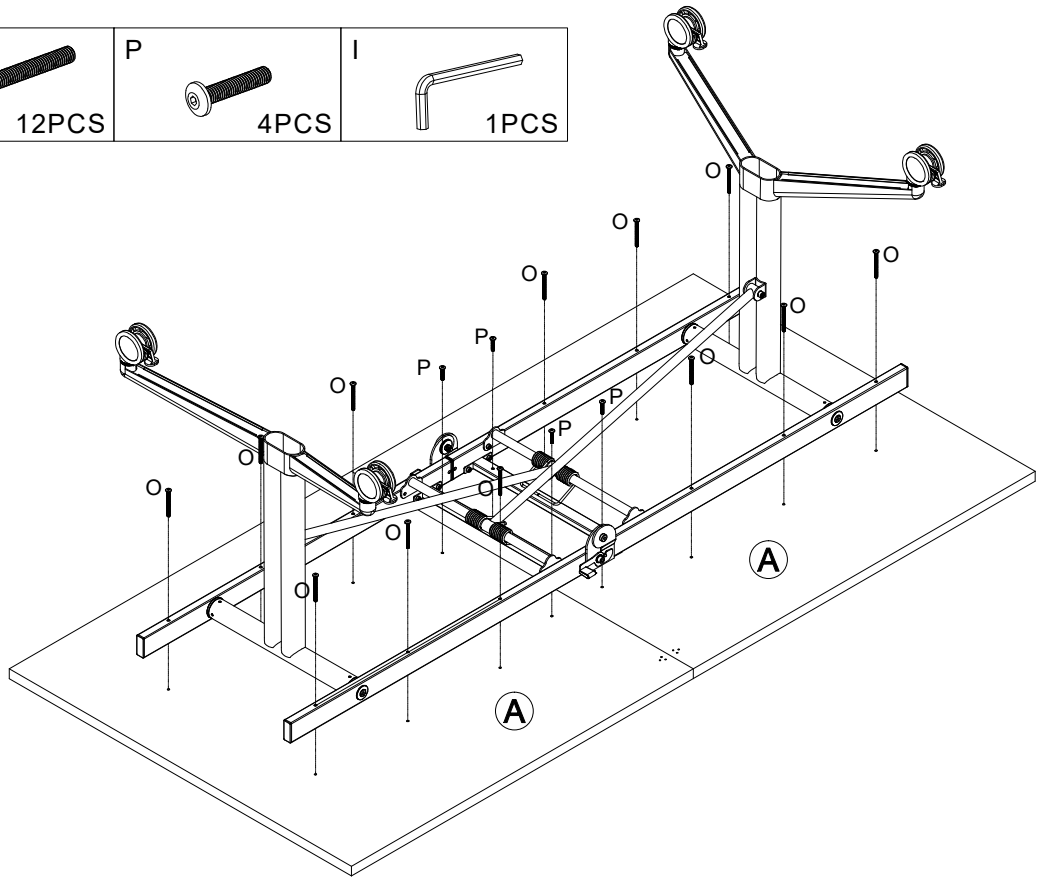

Use the M4 wrench H and screw O & P to fasten the unfolded table frame B with the table top Ax2

4

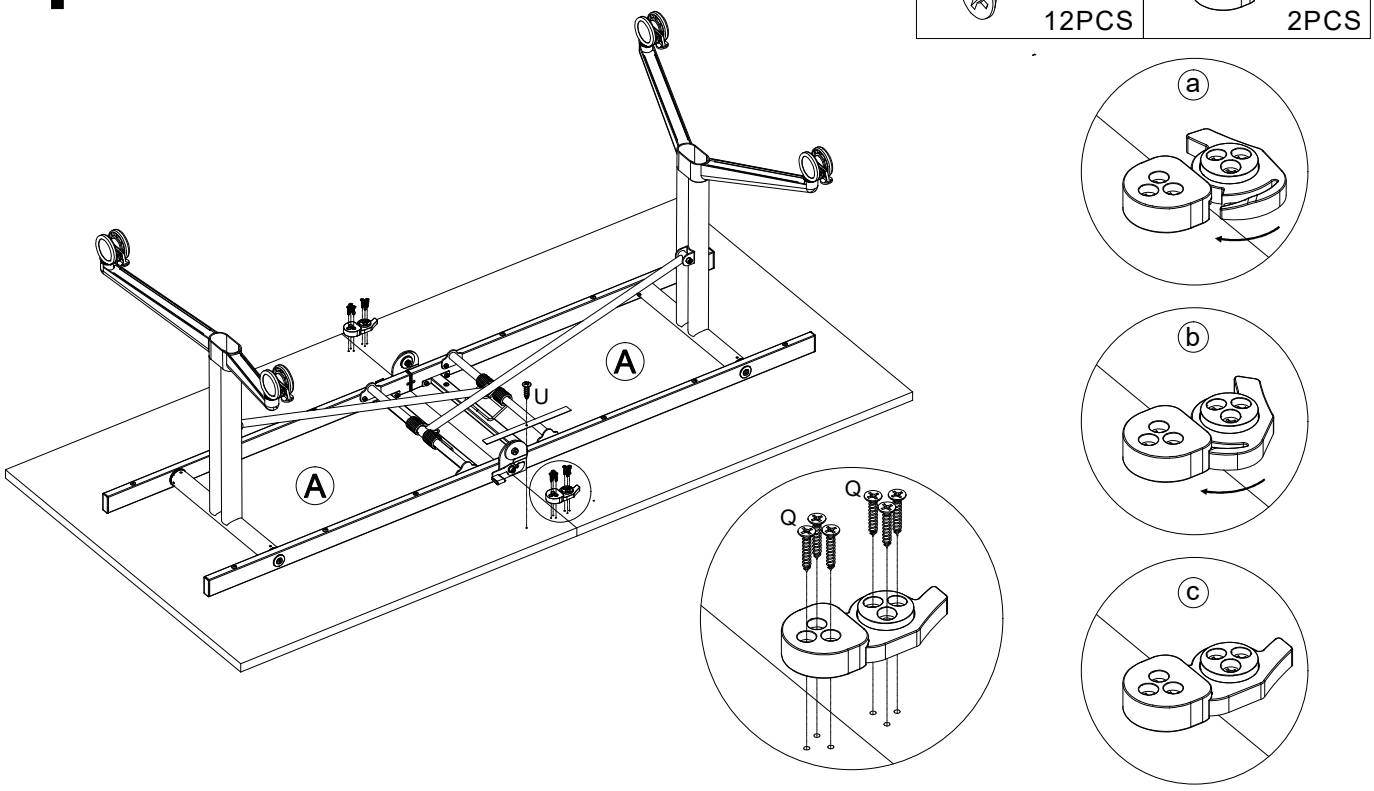

Use self-tapping screw Q to assemble the plastic connetor to the bottom of each table top A to secure the table top alignment and flatness.

5

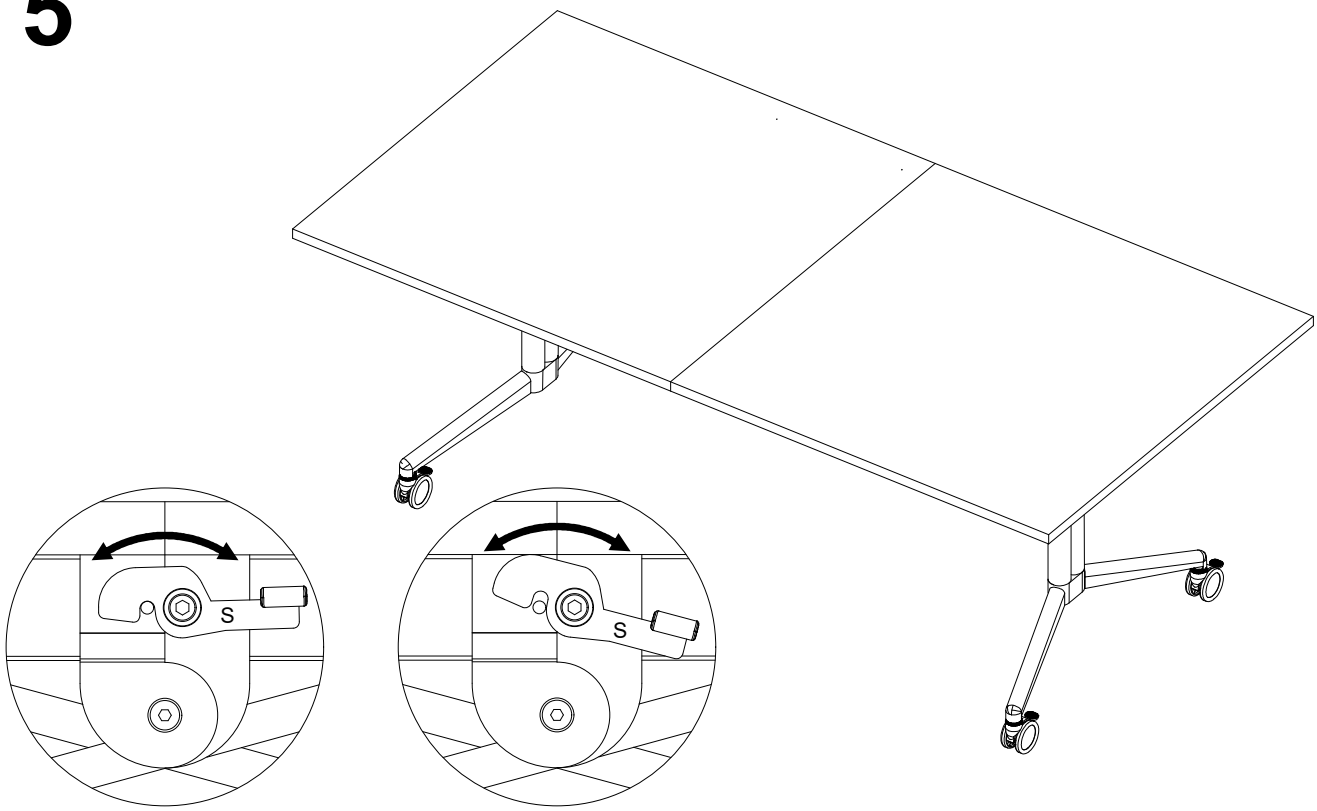

Please secure/lock the hook S and L when the table being unfolded and upward.

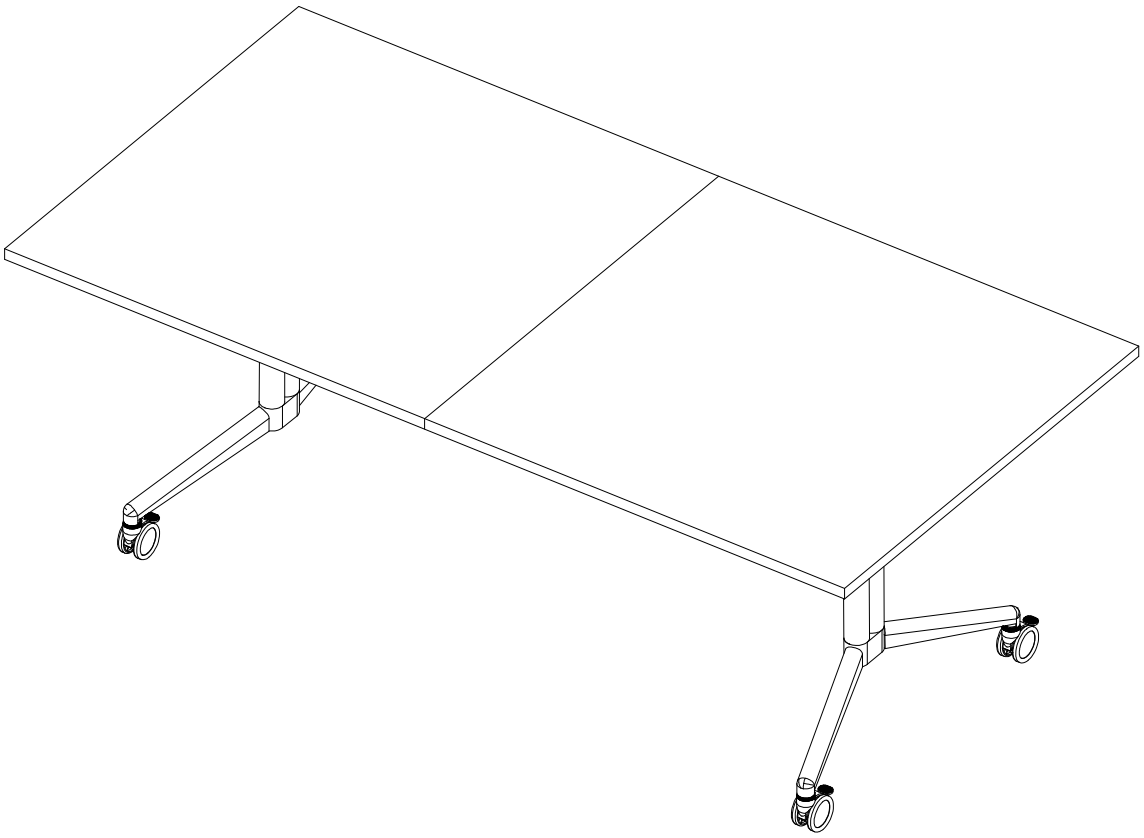

Thank you very much for purchasing from us.

We have always been trying to provide the best service and reliable products for every customer.

However,accident may happen sometimes,please contact us to resolve any issue before leaving a negative feedback.

Please contact at: christyningxing@nxubay.com or
via Phone#3233938260 at EST 1PM-5PM

Many thanks and welcome to our shop again!