Model number:
NTM-896-48MB-AL

DIMENSIONS

Streamline

Rough-In Dimensions

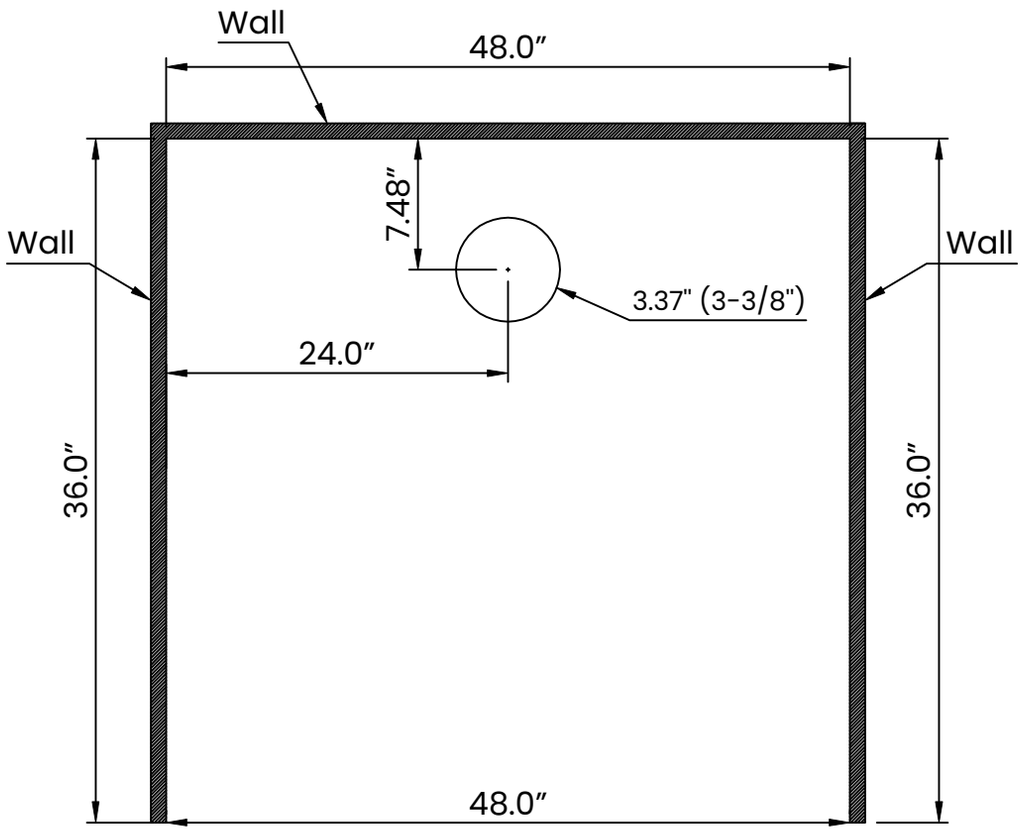

Product Dimensions

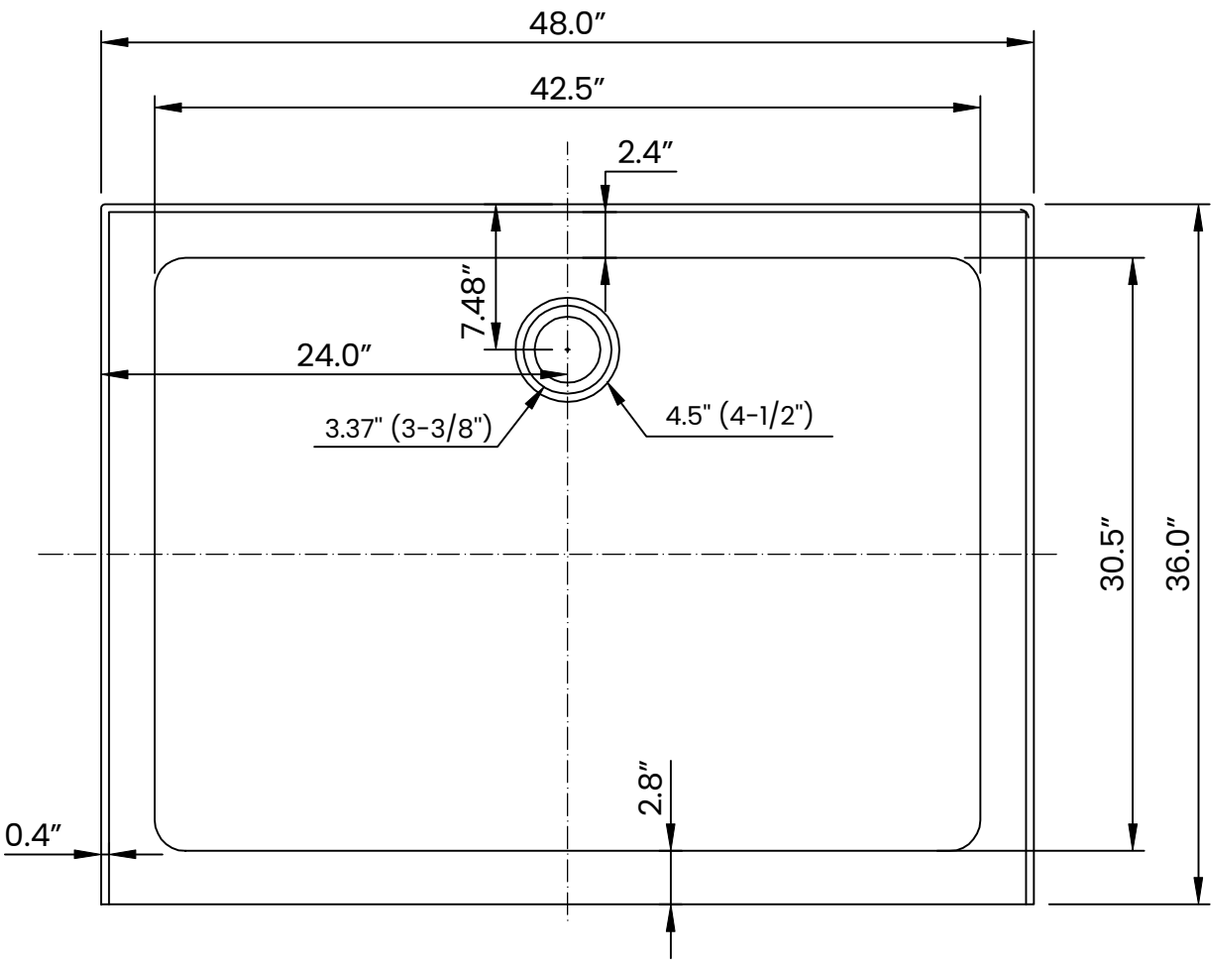

Model number:
NTM-896-48MB-AL

DIMENSIONS

Streamline

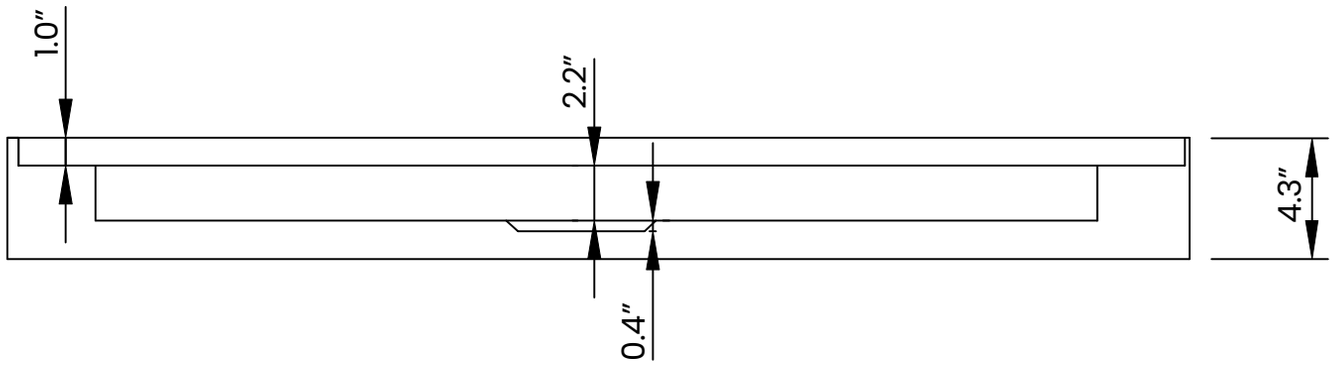

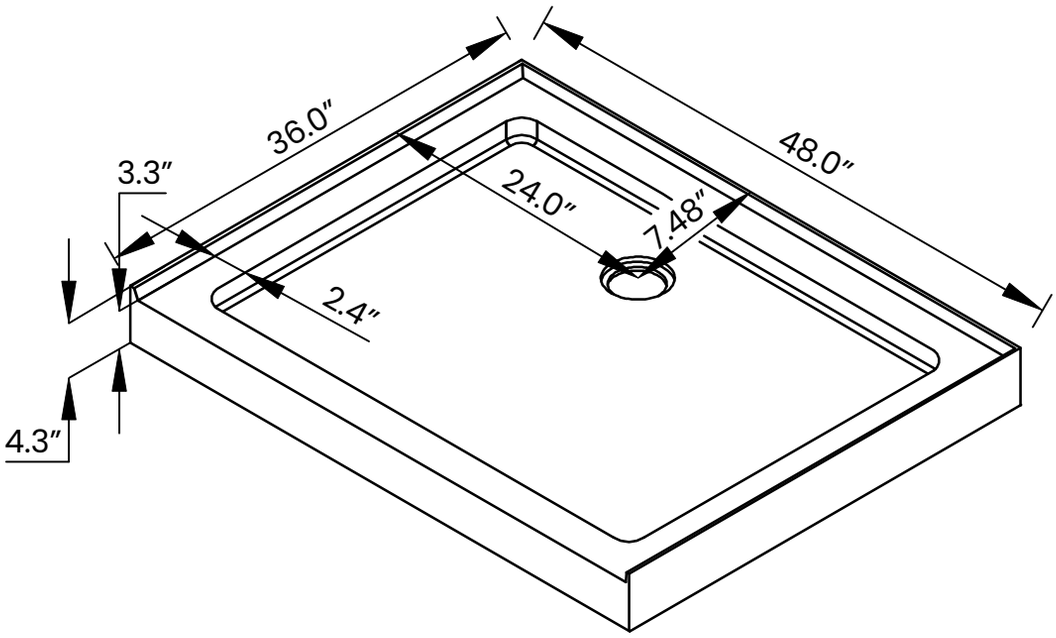

Model number:
P-120-CH

DIMENSIONS
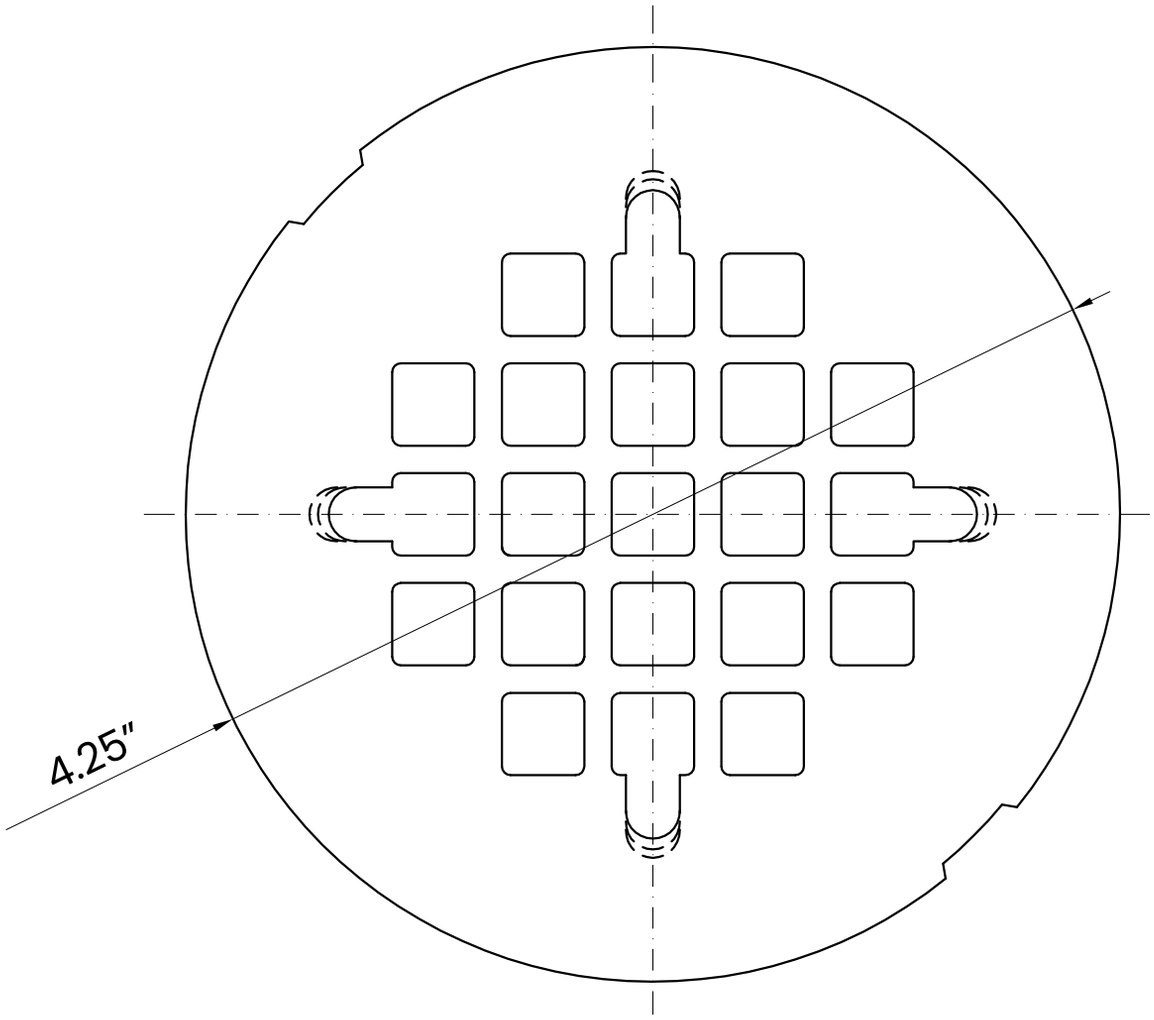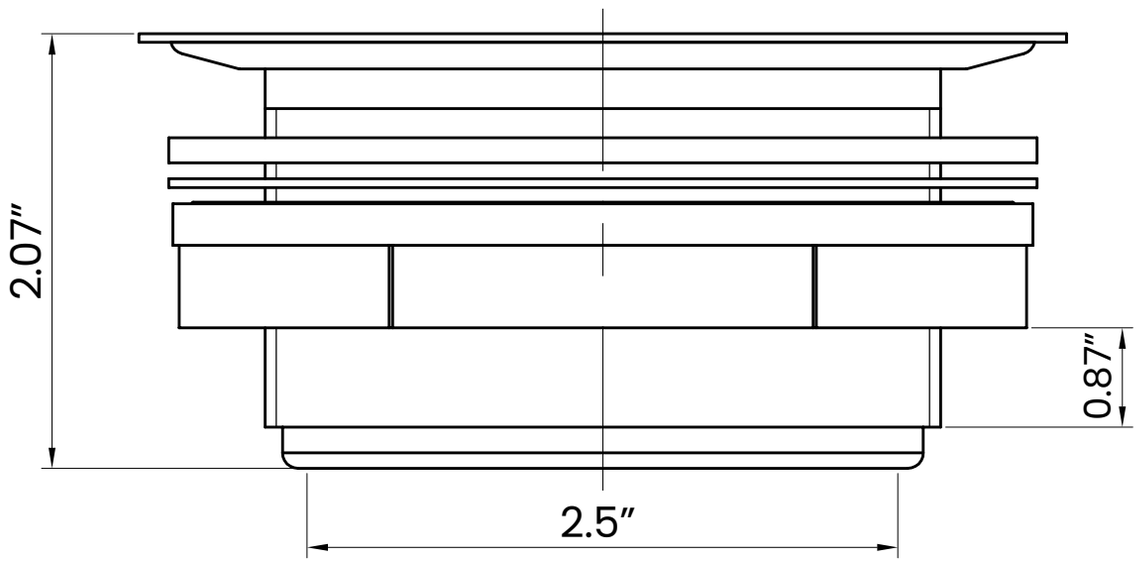
Streamline