MH-TB-21288

30 : 00

estimated assembly

2 or more

people required

Ok, let’s get started!

- Put on mood music!
- To prevent damage to product, use the clean side of package carton or rug as working surface.
- In the event of missing or damaged parts, delivery problems etc., please reach out to our team.
  We will be happy to fix the problem!

care guide

- Clean regularly with a soft and dry cloth.
- To protect finish, avoid use of abrasive cleaners.
- Wipe up spills immediately. Please!

product parts

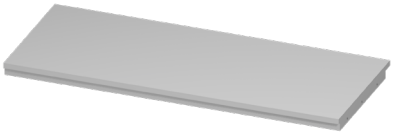

(A) Top
x1

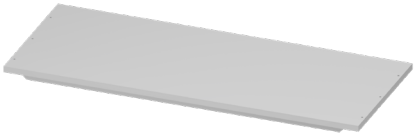

(B) Bottom
x1

(C1) Left Side
x1

(C2) Right Side
x1

(D) Shelf
x1

product parts

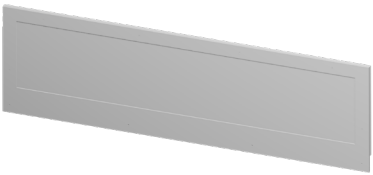

(E1) Back Upper Part
x1

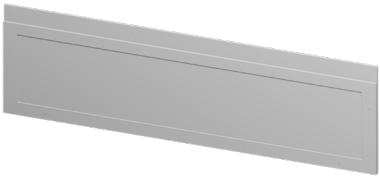

(E2) Back Lower Part
x1

(F1) Left Door
x1

(F2) Right Door
x1

what's included

(G)
Bolt (6x40)
26 Pcs

(H)
Bolt (6x20)
2 Pcs

(I)
Bolt (4x35)
2 Pcs

(J)
Washer (6x16)
16 Pcs

(K)
Lock Washer (6x12)
16 Pcs

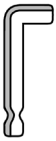

(L)
Ball Allen Key (4mm)
1 Pcs

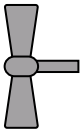

(M)
Knob
2 Pcs

(GS) Green Sticker

(YS) (YS) Yellow Sticker

(RS) (RS) Red Sticker

assembly instructions

Friendly Tip: Take a deep breath going in. This may be a tricky part, but nothing too overwhelming. Just follow these steps to the T and the outcome will be worth it!

While assembling the product, tighten the bolts up to 50%. Once all parts are in place, only then fully tighten the bolts.

step 1:

Start by bringing the Back Upper Part (E1) and Back Lower Part (E2) on a flat surface. Align the edges and pre-drilled holes as shown below. Ensure the green stickers (GS) on each part meet together & are facing towards you.

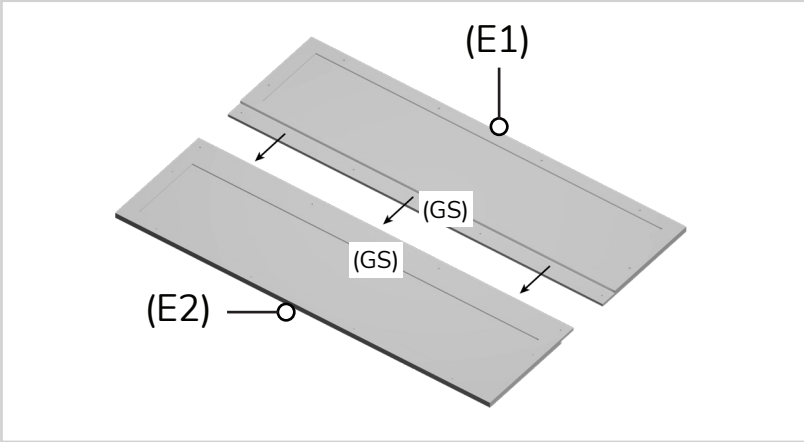

step 2:

Then, secure them by inserting the (H) bolts into the D-nuts. Tighten using the (L) Allen Key.

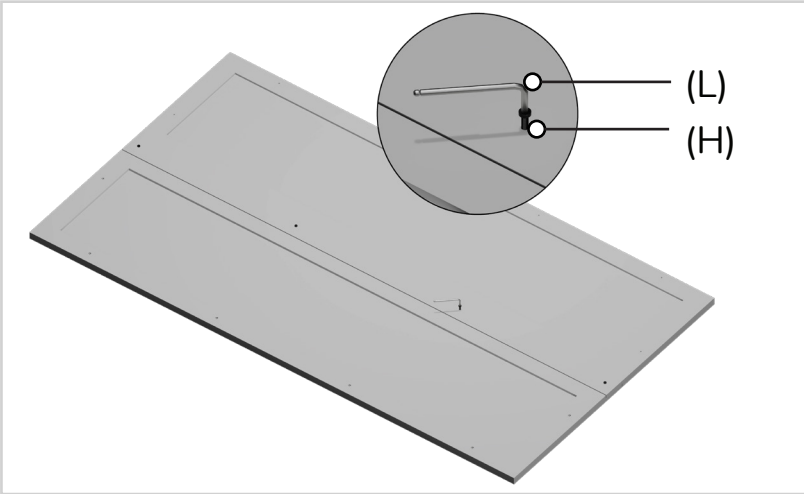

step 3:

Next, place the top (A) of the cabinet vertically with a yellow sticker on the left and align it with the right side (C2) of the cabinet as shown in the image below. Ensure the sticker on (A) & (C2) matches.

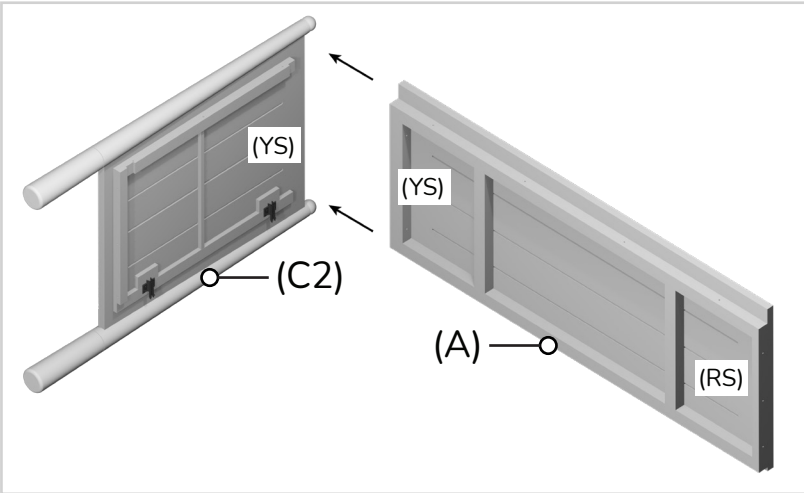

step 4:

Now, fix them together by using washers (J), lock washers (K), and bolts (G) in the given slots. Tighten using allen key (L).

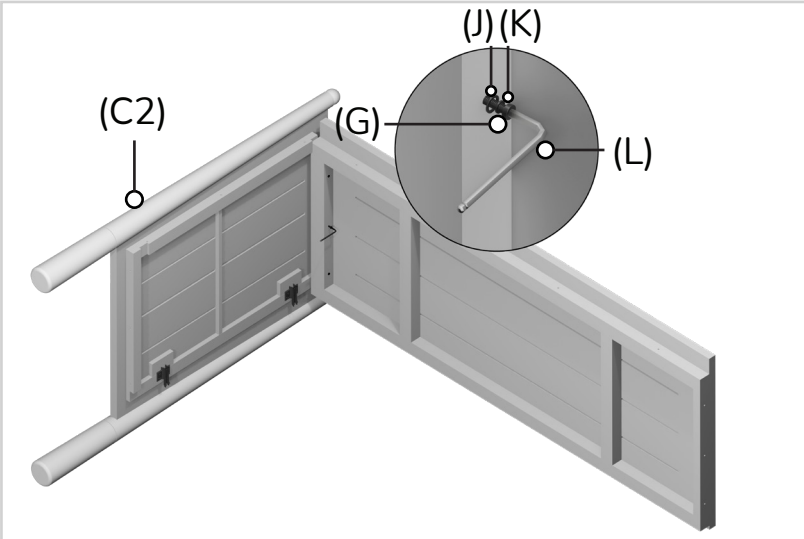

step 5:

Repeat step 4 with the left side (C1) of the cabinet.

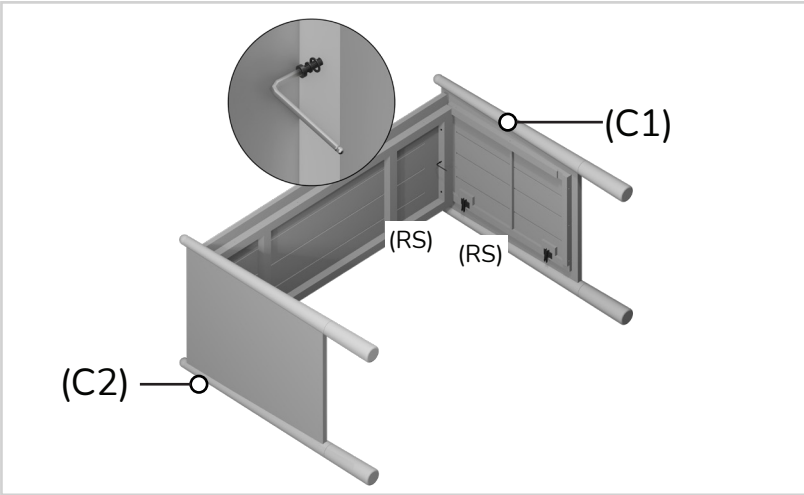

step 6:

Now, take the assembled back part (E1, E2) and align it over the sides (C1) (C2) & the top (A) as shown in the image below. Ensure all the edges and holes match correctly.

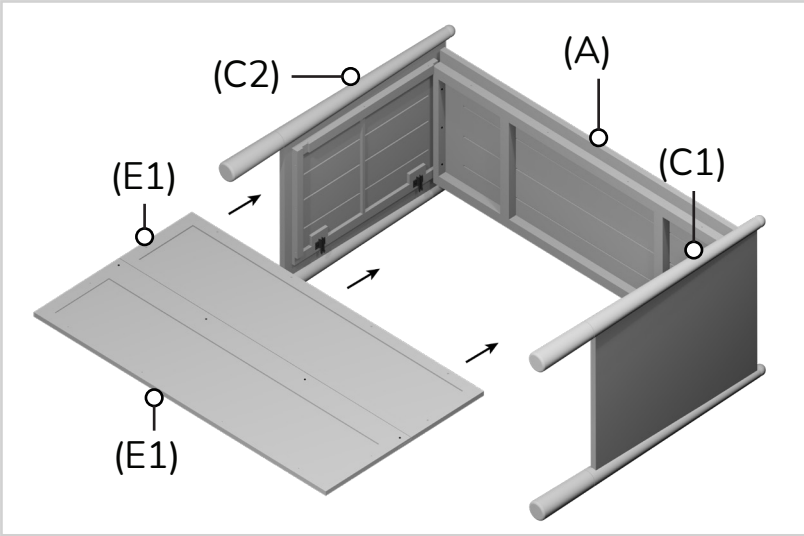

step 7:

Fix it in place by using bolts (G) into the D-nuts. Tighten using allen key (L)

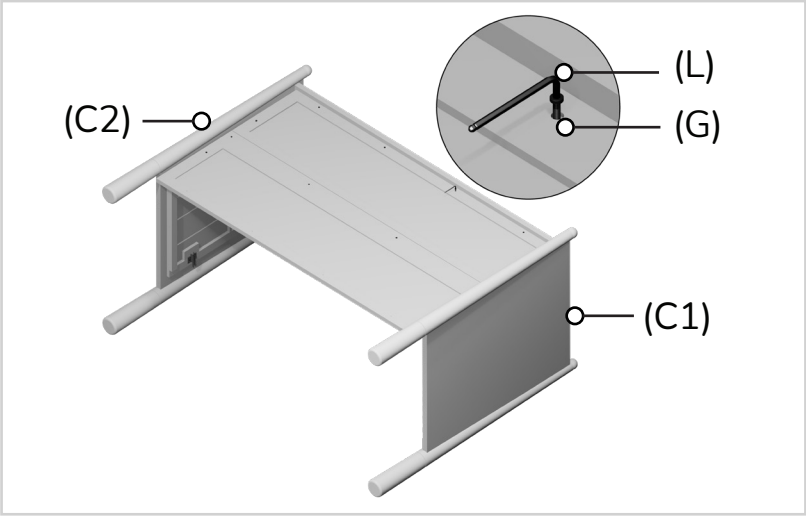

step 8:

Next, align the cabinet bottom (B) below the sides (C1), (C2) & the back (E1, E2) as shown in the image below. Ensure the stickers on the bottom match the sides, along with all the edges and holes.

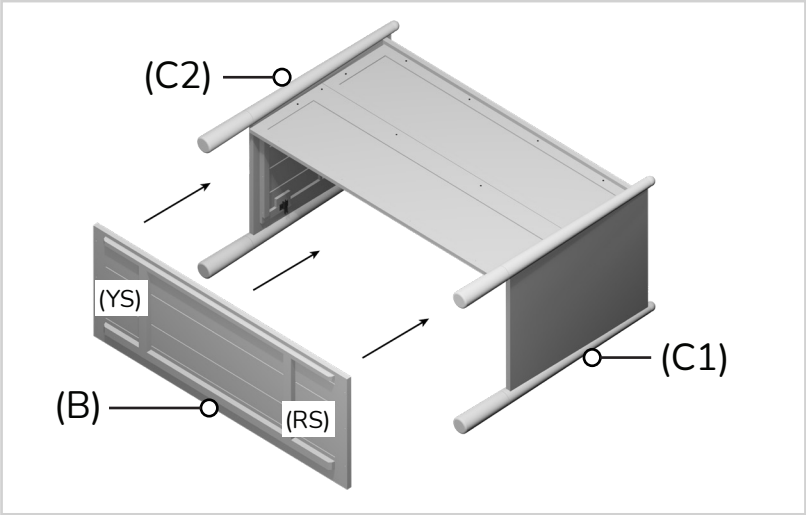

step 9:

Fix it in place by using washers (J), lock washers (K), and bolts (G) in the given slots. Tighten using allen key (L).

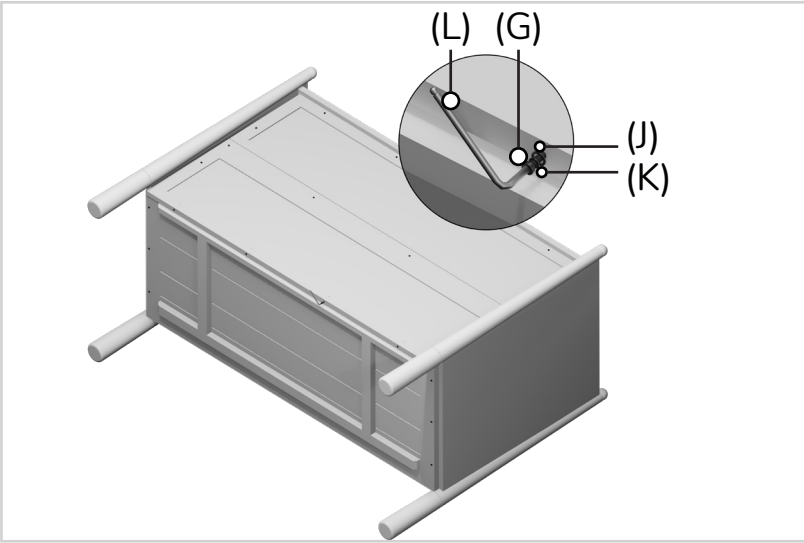

step 10:

Now, turn the cabinet upright. Take the left door (F1) and align it with the left side panel (C1). Fix it in place by attaching the hinges on the door with the hinge clips on the side panel.

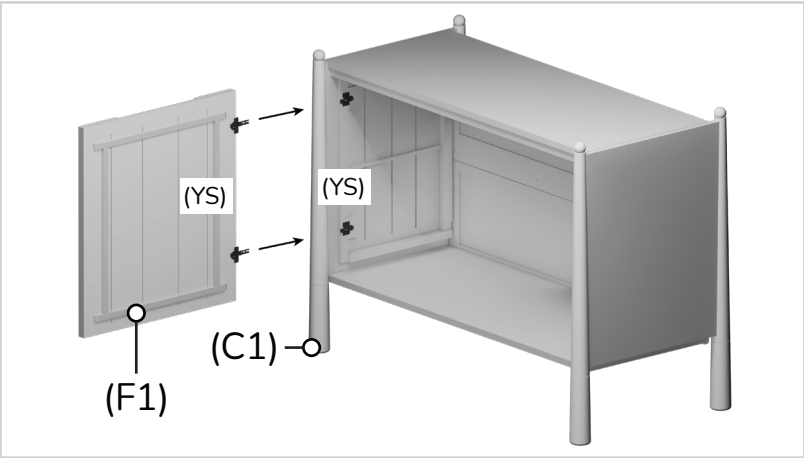

step 11:

Repeat step 10 with the remaining door (F2).

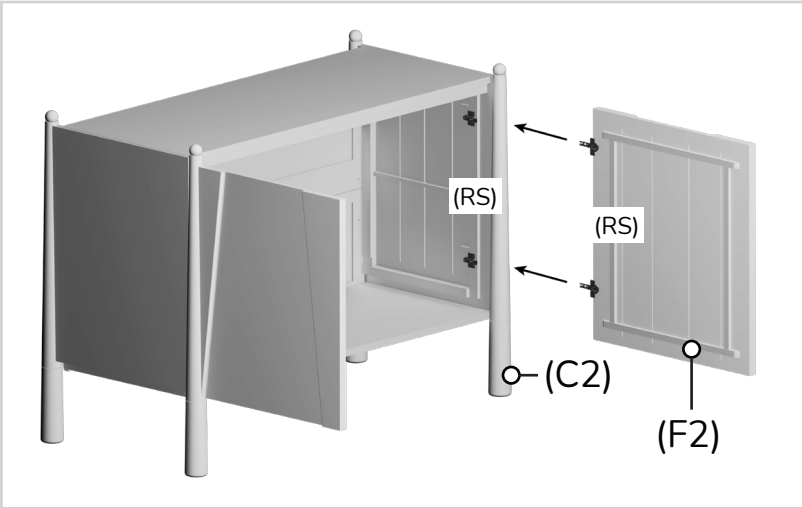

step 12:

Next, insert the shelf (D) over the batons on the sides. Use the image below as a reference.

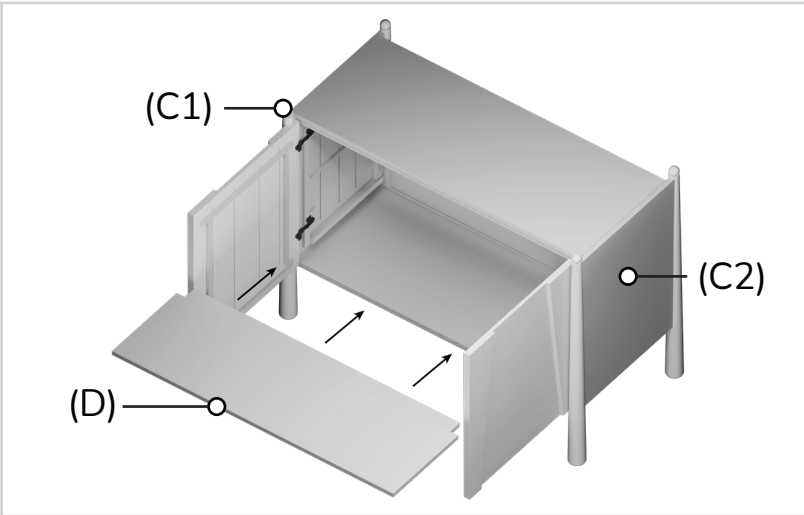

step 13:

When done, take the doorknob (M) and fix it outside the door by using bolts (I). Tighten using allen key (L). Repeat the same step with the other remaining door knob & door.

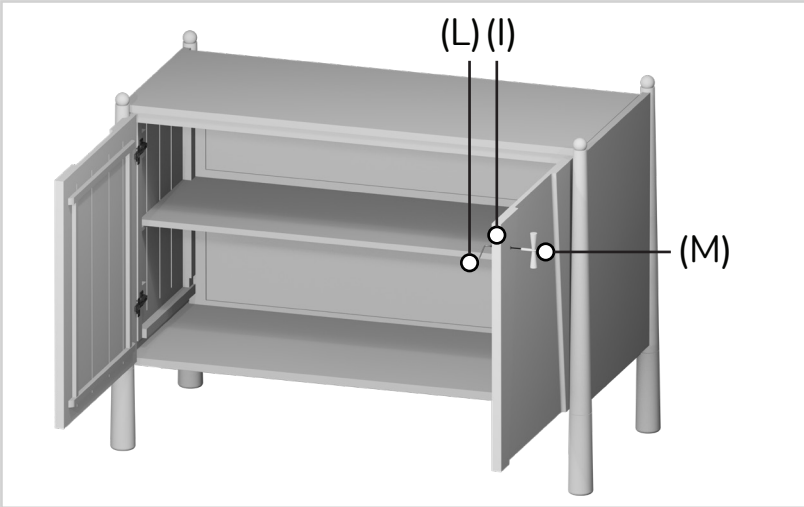

step 14:

If required, adjust the levellers according to the floor.

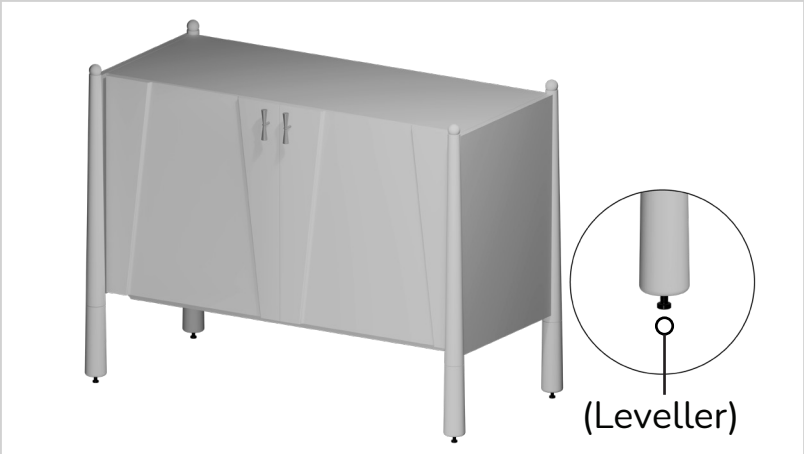

Voila! Your Cabinet is now assembled and secure.

installation instructions

While assembling the product, tighten the bolts up to 50%. Once all parts are in place, only then fully tighten the bolts.

Hardware Included

a X 04
4 X 16mm

b X 04
4 X 30mm

c X 04

d X 04

e X 02

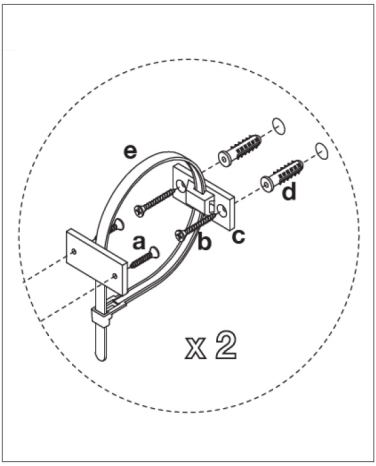

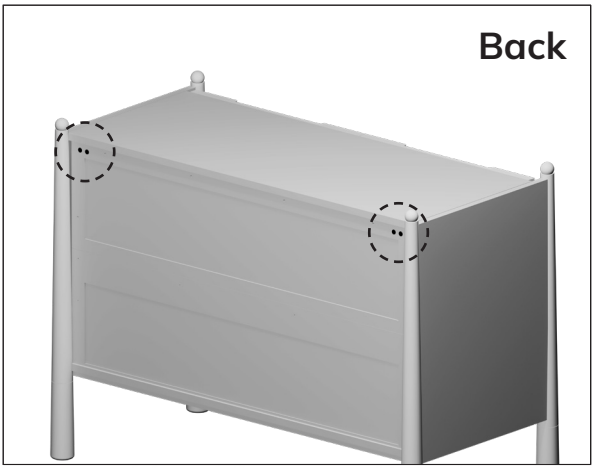

Wall Mounting Instructions

1. Using screws provided and a screwdriver, secure mounting plate(s) to the back of product.

2. Noting the location of the product's mounting plate(s), mark and drill holes on the wall for mounting plate(s). Drill pilot holes into marked positions and into a wall stud. NOTE: if wall studs are not available, drill holes slightly smaller than the drywall anchors and insert each anchor until its flange is flush with the wall.

3. Using a screwdriver, secure mounting bracket(s) to the wall stud or drywall anchors with screws provided.

4. Position product in final location, and secure to the wall by lacing one end of plastic tie(s) through both the and product mounting plates, and through the other end, pulling tightly to remove slack. Do not over tighten.

you've
got
a home
with us