Outsunny

IN231200140V01_US

840-245V83

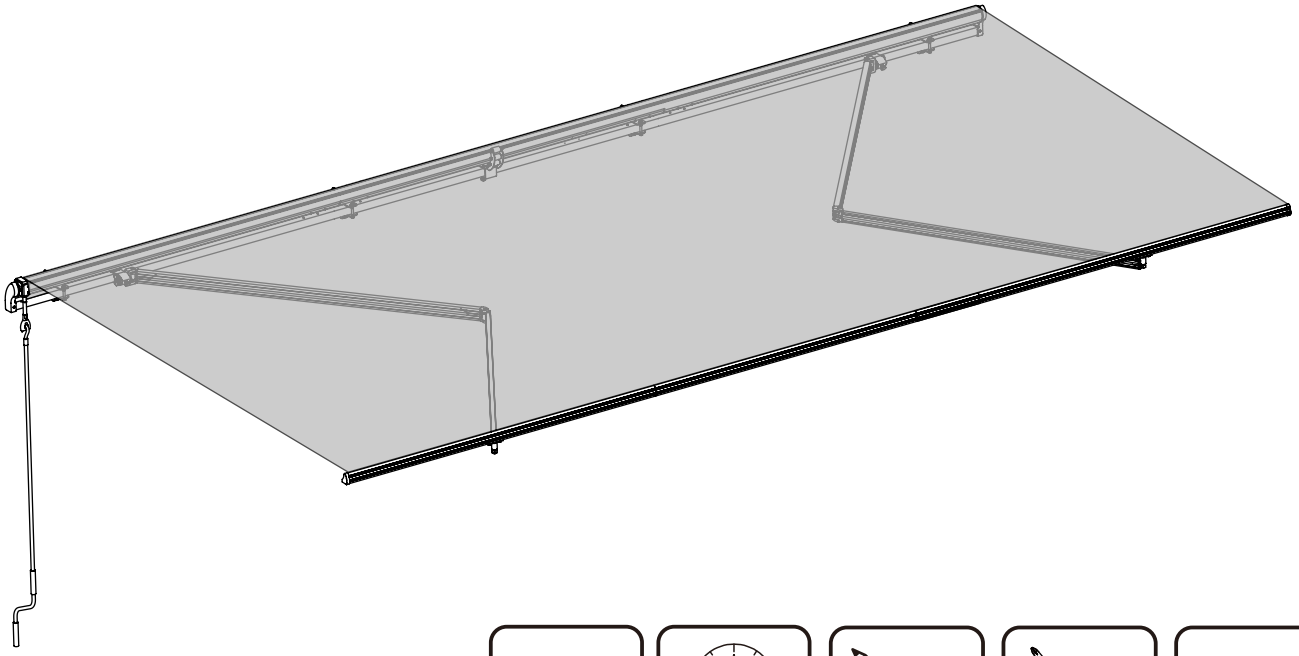

Tools Recommended

EN_IMPORTANT, RETAIN FOR FUTURE REFERENCE: READ CAREFULLY.

FR_IMPORTANT:A LIRE ATTENTIVEMENT ET À CONSERVER POUR CONSULTATION ULTÉRIEURE.

ES_IMPORTANTE, LEA Y GUARDE PARA FUTURAS REFERENCIAS.

PT_IMPORTANTE, RETER PARA REFERÊNCIA FUTURA: LEIA ATENTAMENTE.

DE_WICHTIG! SORGFÄLTIG LESEN UND FÜR SPÄTER NACHSCHLAGEN AUFBEWAHREN.

IT _ IMPORTANTE! CONSERVARE IL PRESENTE MANUALE PER FUTURO RIFERIMENTO E LEGGERLO ATTENTAMENTE.

WARNING!/ATTENTION! /ACHTUNG!/¡ ADVERTENCIA! /ATTENZIONE! ATENÇÃO!

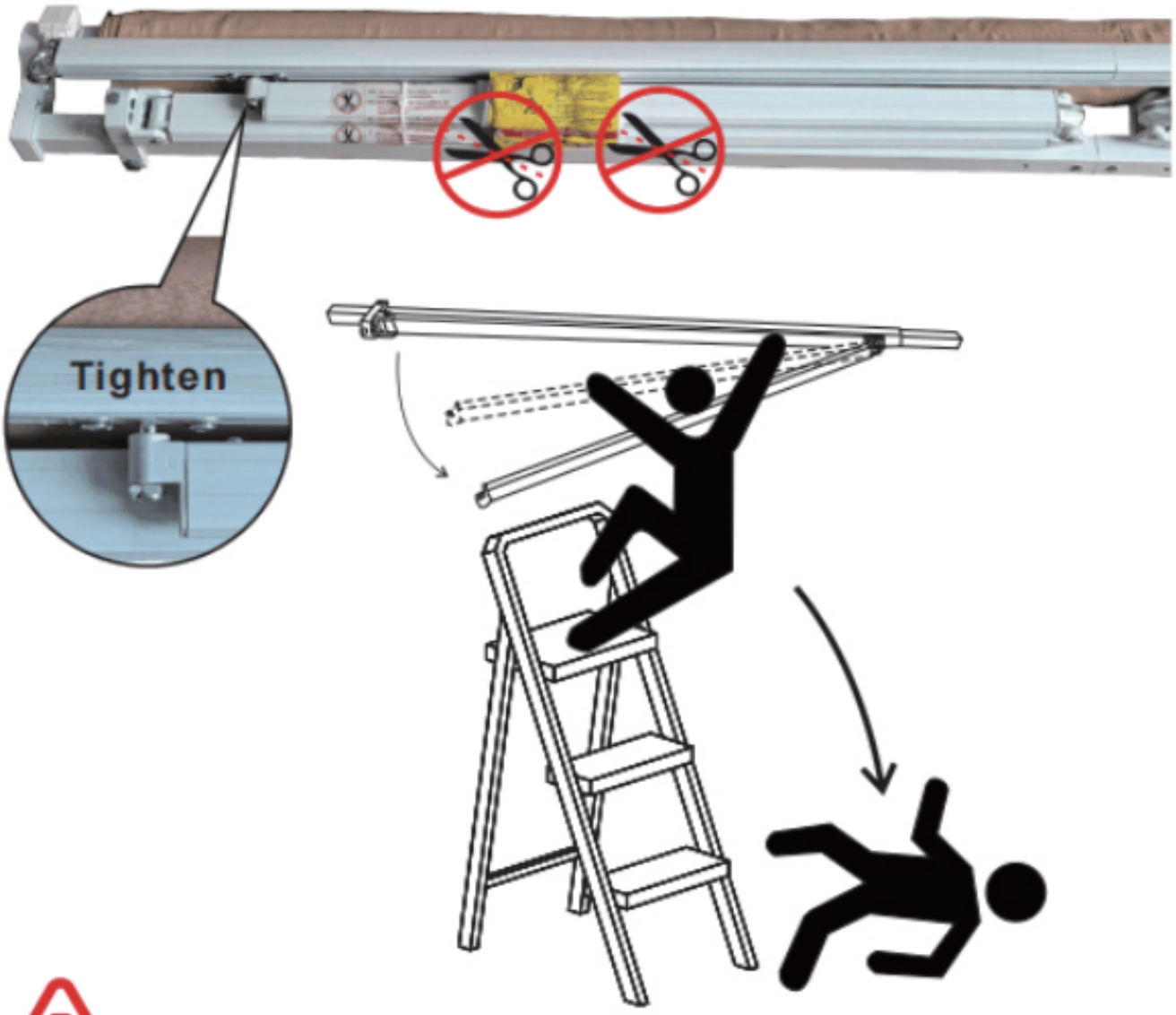

*EN*_DANGER! Cutting the cable ties before assembly may cause injury.

*FR*_DANGER ! Couper les colliers de serrage avant l'assemblage peut causer des blessures.

*DE*_GEFAHR! Das Abschneiden der Kabelbinder vor der Montage kann Verletzungen verursachen.

*ES*_¡ PELIGRO! Cortar las bridas antes de la instalación puede causar lesiones.

*IT*_PERICOLO! Tagliare le fascette prima del montaggio può causare lesioni.

*PT*_PERIGO! O corte das braçadeiras de cabos antes da montagem pode provocar ferimentos.

Maintenance recommendations

●Metal: Wash with mild soapy water and rinse with clean water.
Dry with a lint free cloth. Avoid using detergents and acidic products.

●Fabric: Dry cleaning.

●Plastic: Dust regularly with a clean, soft, and dry cloth.
Avoid using any corrosive products.

Required tools: screwdriver, hammer, drill bit, wrench (roller, inner hexagon)
Important reminder: Before starting to assemble furniture, make sure to receive all the parts.

Precautions for use:
1. Keep children and pets away from assembly points.
2. For your safety, do not assemble alone. For safety reasons, we recommend two people to assemble.
3. Some parts may have sharp edges. During the assembly process, if necessary, please wear protective gloves.
4. Basic precautions should be taken when assembling and using this product to limit the risk of injury and property damage.
Please read
5. For outdoor use only. This product should not be used in situations where the wind force is greater than level 5 (29-38km/h).
This product is only used to generate shadows and cannot withstand harsh weather.
6. Turn off the product in adverse weather, moderate to strong winds, heavy rain, or heavy snow. Do not use this product in cold weather
as it may Damage or affect its performance.
7. Check all nuts to ensure they are securely tightened before and during use.
8. The warranty does not include damage caused by adverse weather conditions.
9. Do not light candles, matches, or open flames below or near the product.
10. Warning: Do not place any flames or heat sources near the tent fabric.
11. For safety reasons related to internal temperature, the engine can run continuously for 3 minutes.
If the engine starts for more than 3 minutes, it will stop working.
Please wait for 15 minutes for the engine to be used again.
To provide you with information, the internal temperature of the engine will return to the initial temperature after 5 hours.
12. Warning: When cleaning, maintaining, and replacing parts, the product plug should be unplugged.
13. Warning: Important safety instructions. Following these instructions is important for people's safety. Follow these instructions.
14. Warning: Important safety instructions. Please follow all instructions as improper installation may cause serious injury.
Assembly instructions:
Our clear assembly instructions will guide you step by step from the beginning to the end of the assembly project. In this way, you will receive high-quality products. Easy to assemble, it will bring you years of satisfaction.
You only need one screwdriver, one wrench (M8, M10, M12), one hammer, and two (not included).

A x 1

B x 1

C x 1

D x 1

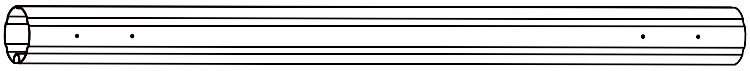

E x 1

F x 1

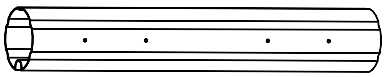

G x 2

H x 1

I x 1

J x 1

K x 2

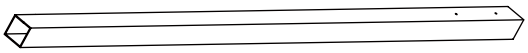

M x 2

N x 1

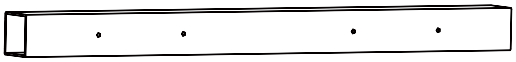

O x 2

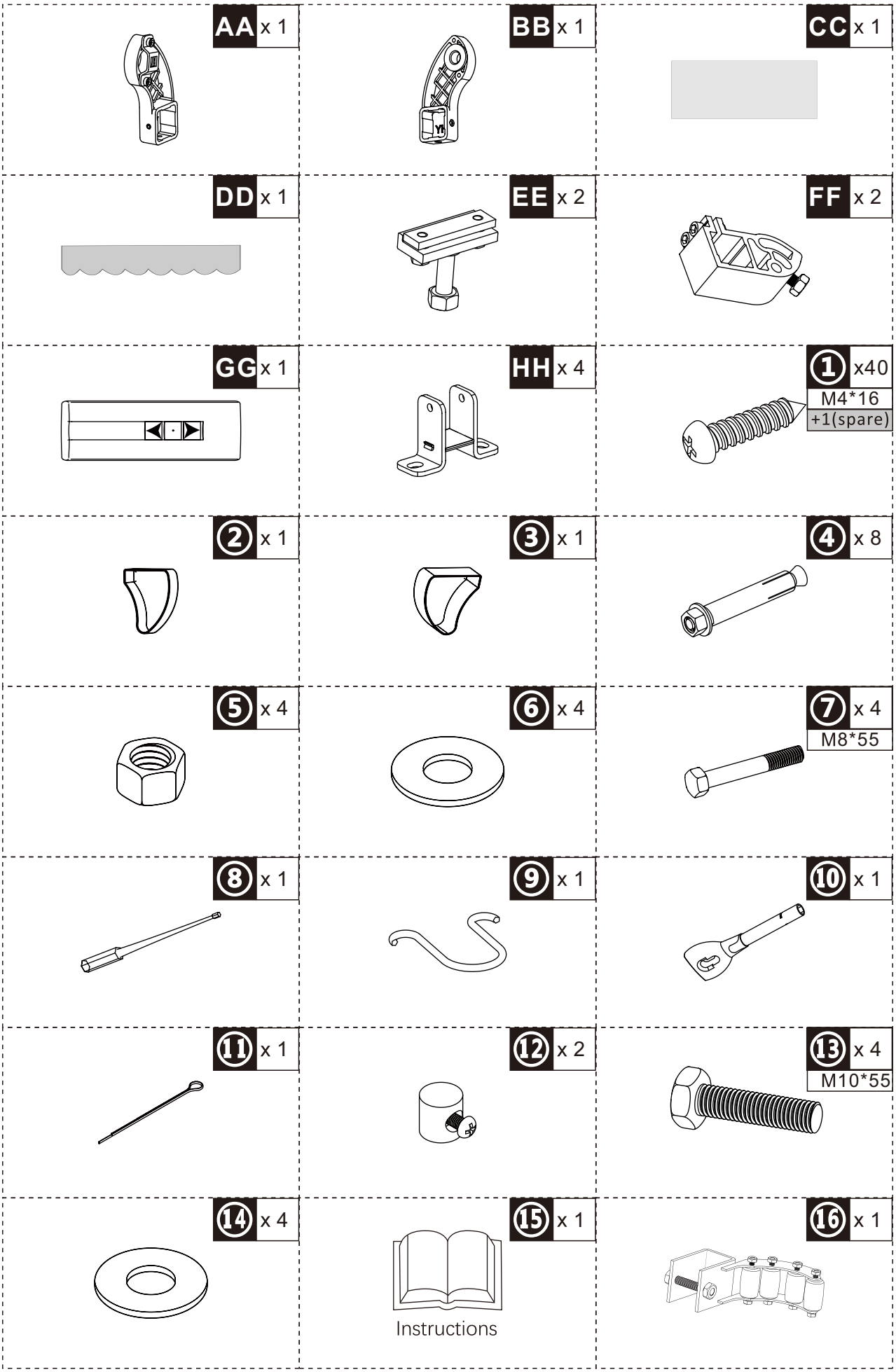
AA x 1
BB x 1
CC x 1
DD x 1
EE x 2
FF x 2
GG x 1
HH x 4
① x40
M4*16
+1(spare)
② x 1
③ x 1
④ x 8
⑤ x 4
⑥ x 4
⑦ x 4
M8*55
⑧ x 1
⑨ x 1
⑩ x 1
⑪ x 1
⑫ x 2
⑬ x 4
M10*55
⑭ x 4
⑮ x 1
Instructions
⑯ x 1

PARTS

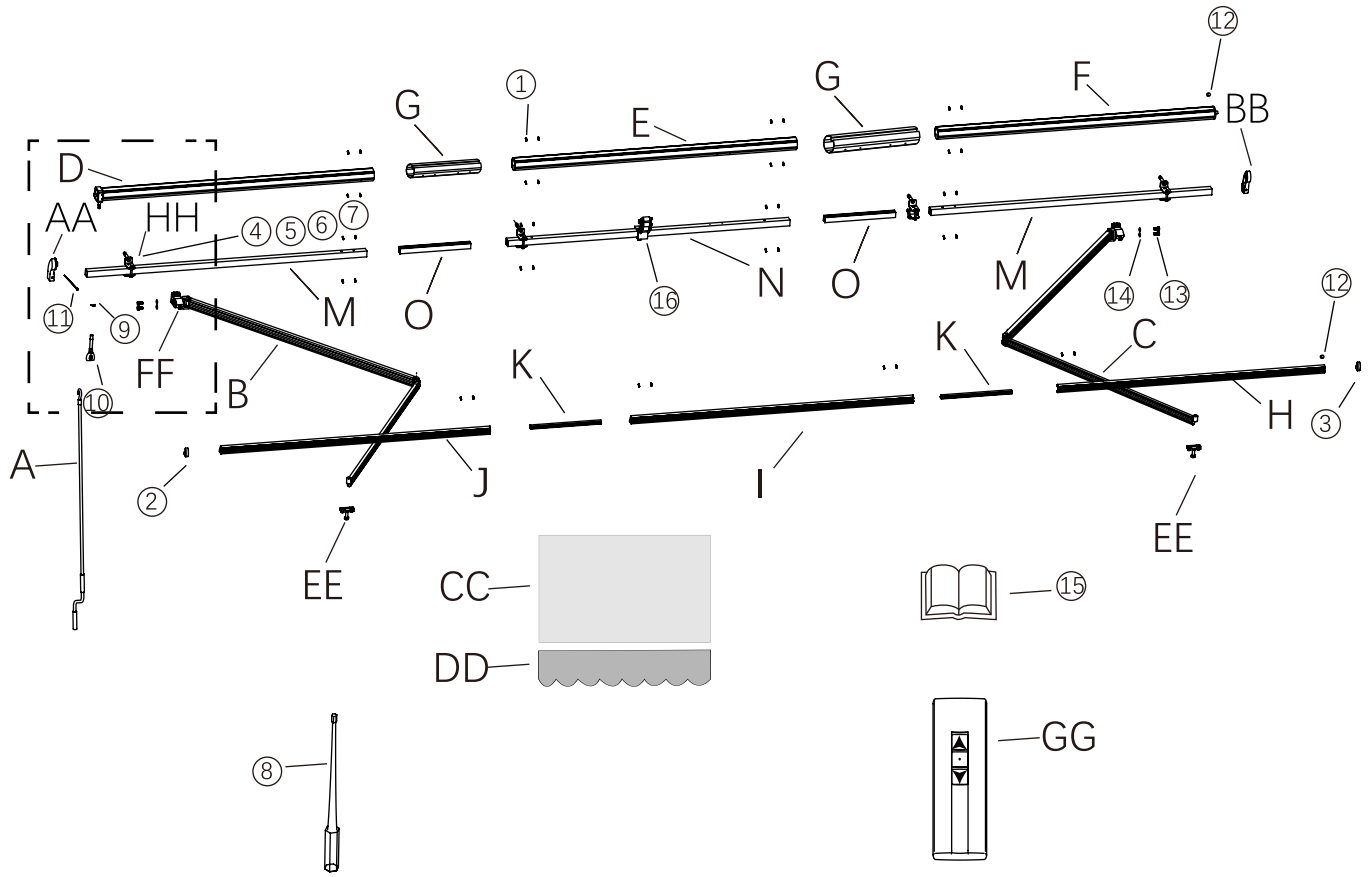

D
AA
HH
4
5
6
7
11
9
10
FF
B
A
2
G
1
E
O
M
16
N
G
O
F
12
BB
M
14
13
12
C
K
K
H
3
J
I
EE
EE
CC
DD
15
8
GG

NOTE

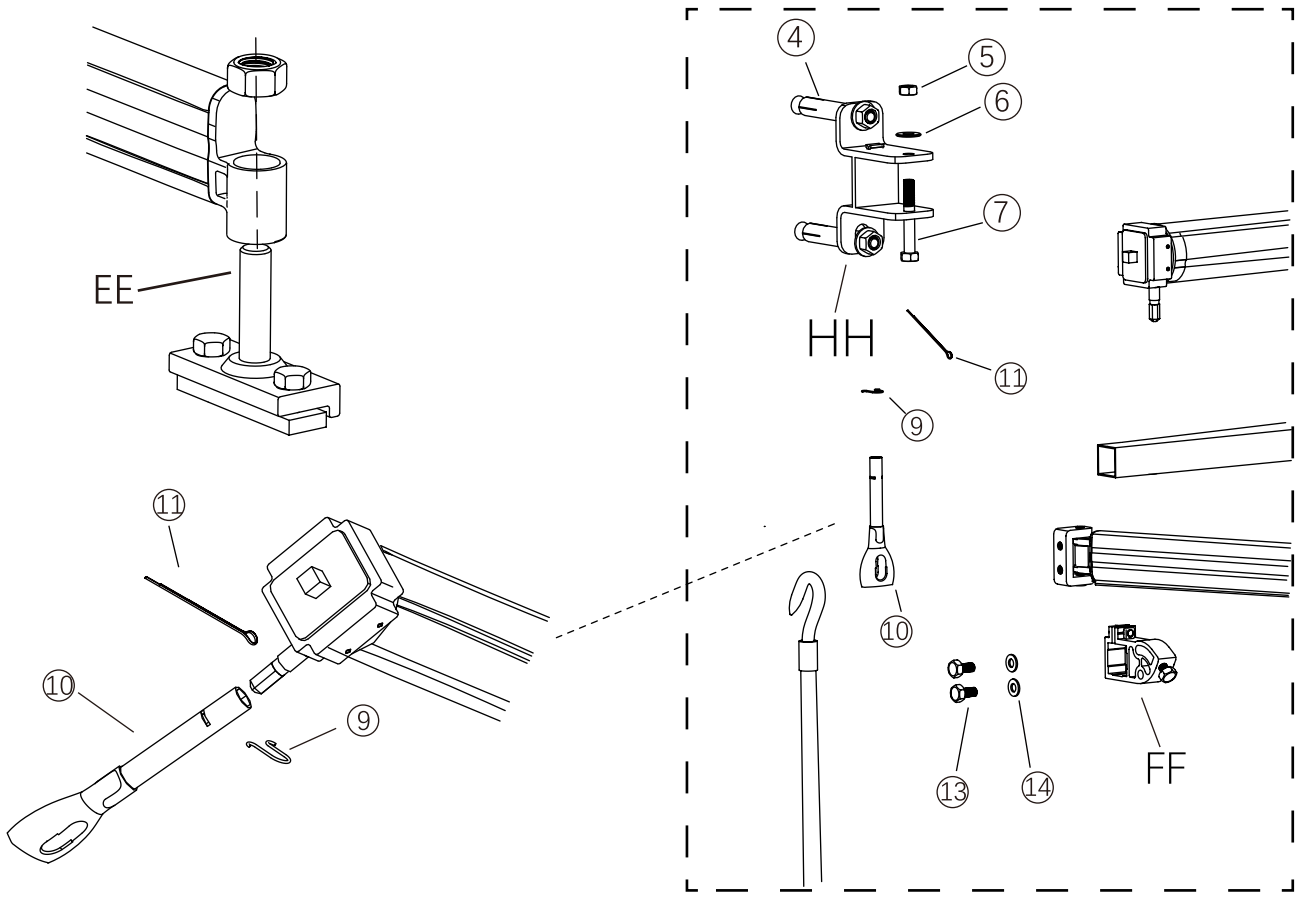

EE
11
10
9
4
5
6
7
HH
11
9
10
13
14
FF

01

Fix arm support and Bars

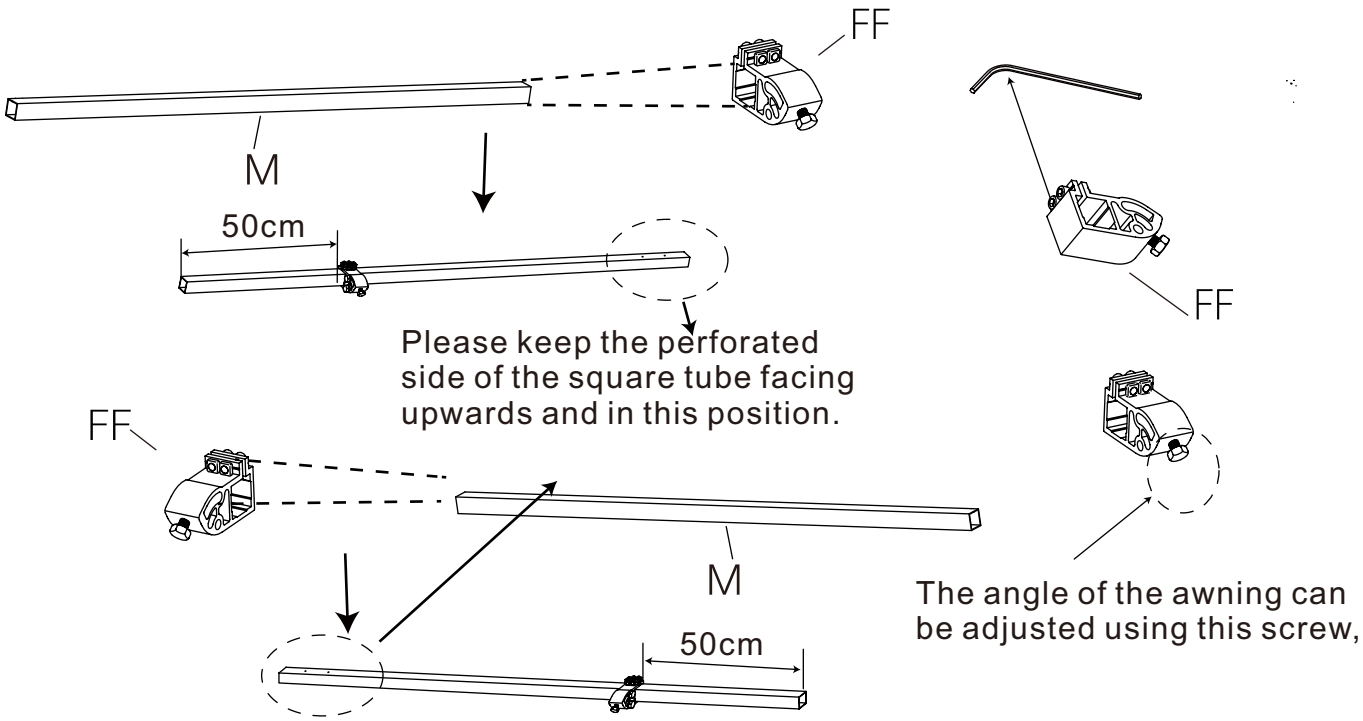

02

Connect arms and square bar.

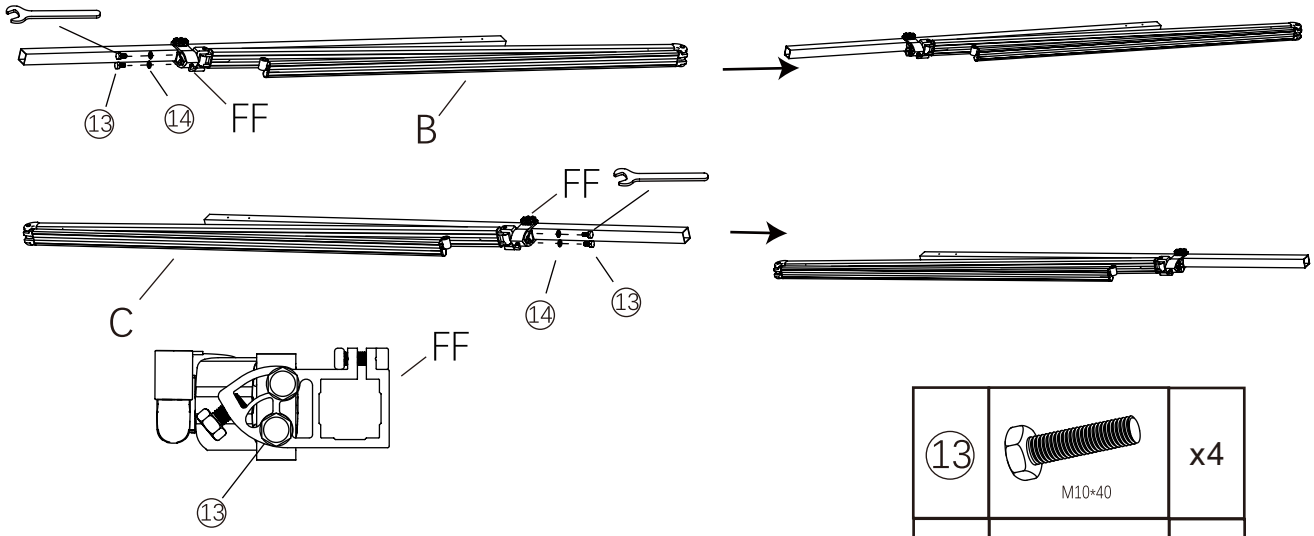

13	M10×40	x4
14	Φ10.5	x4

03

Connect the square bar

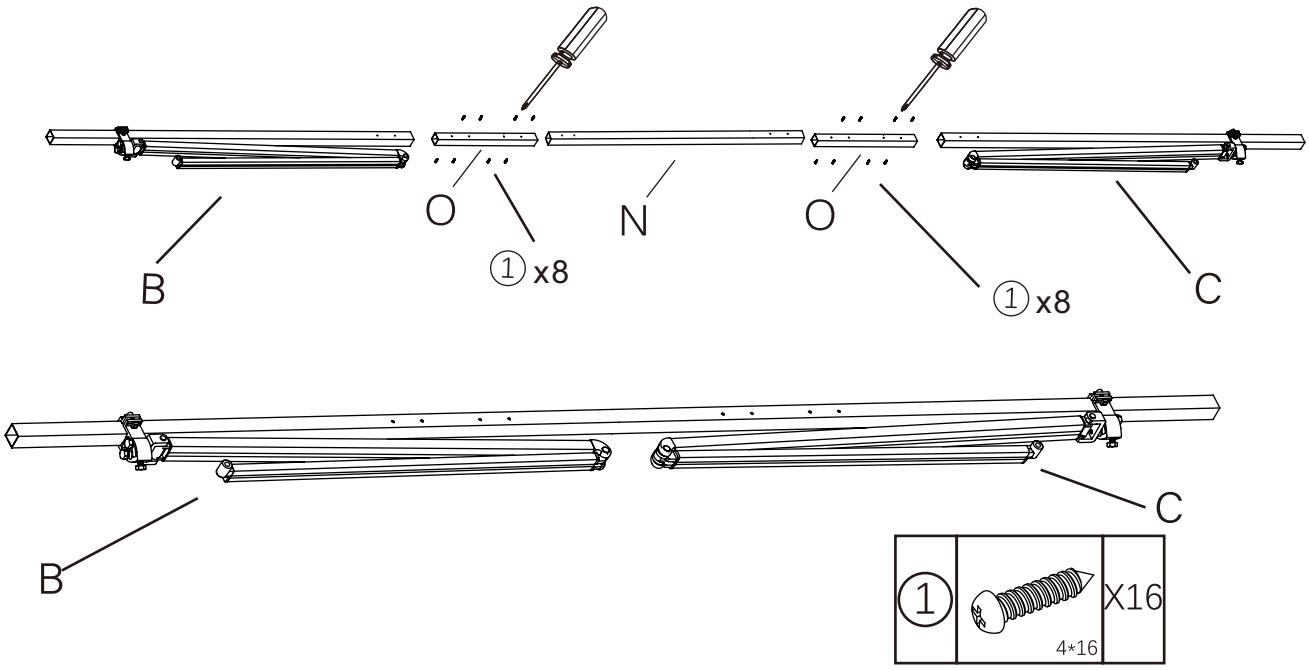

04

Connect the rollers

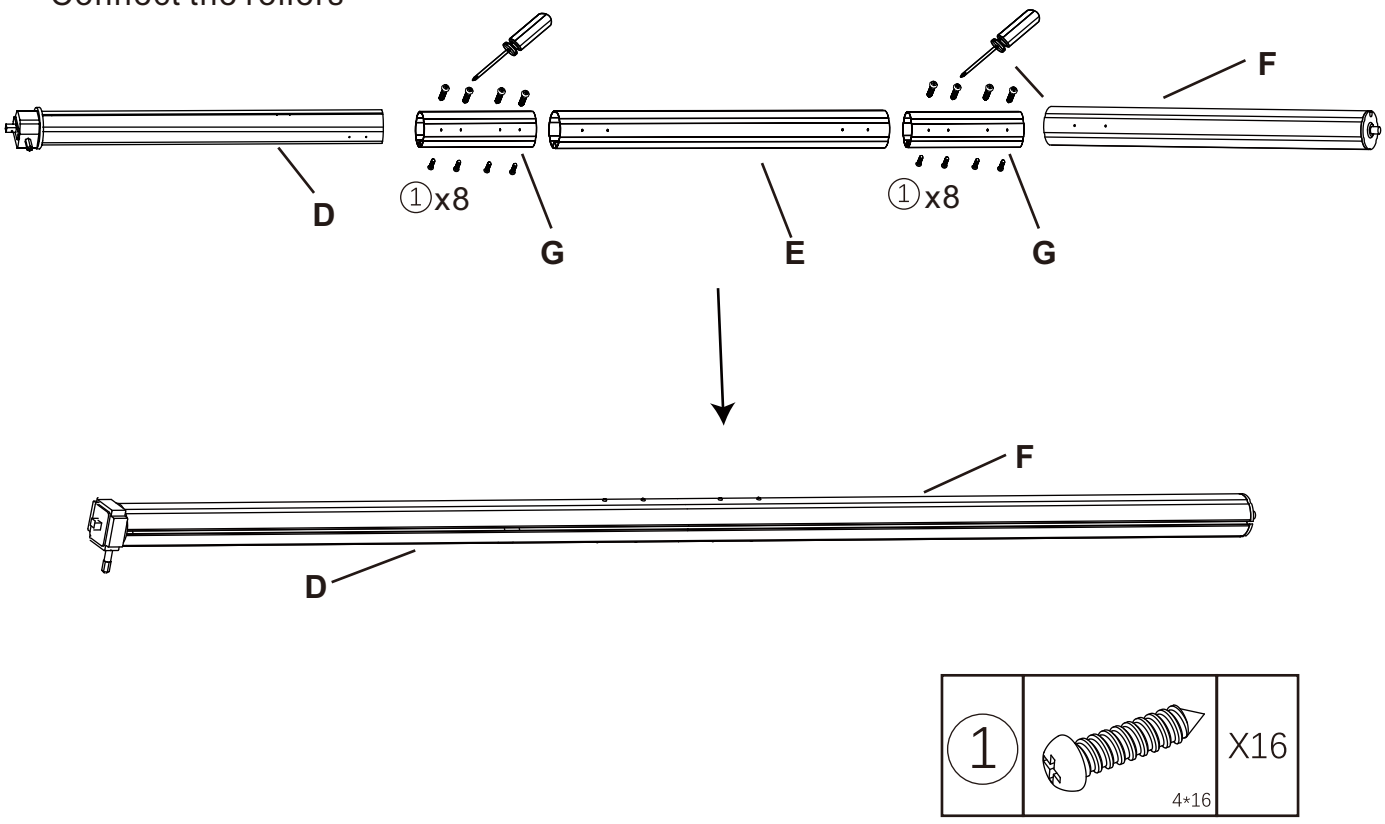

05

Connect the front bars

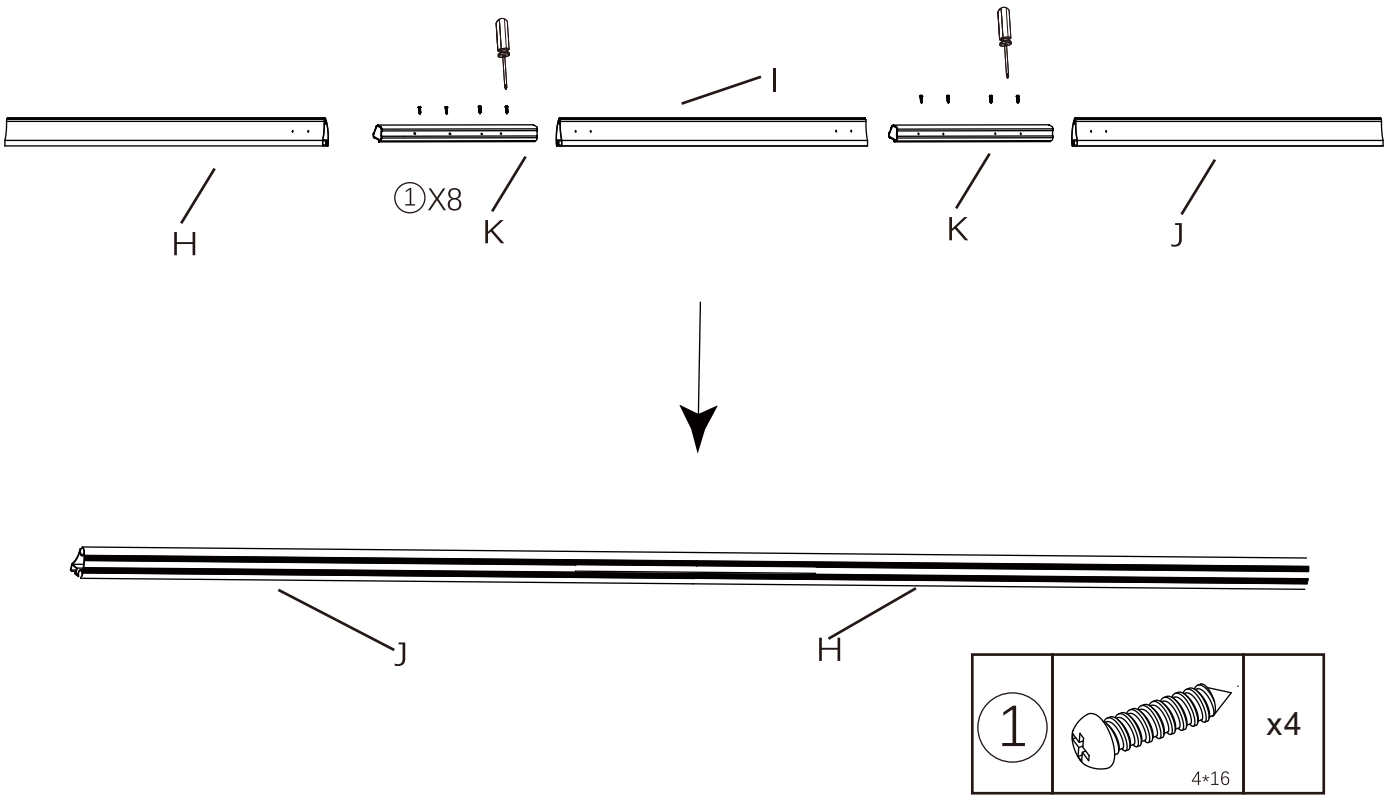

06

Insert the fabric into the roller and front bar as shown in the figure.

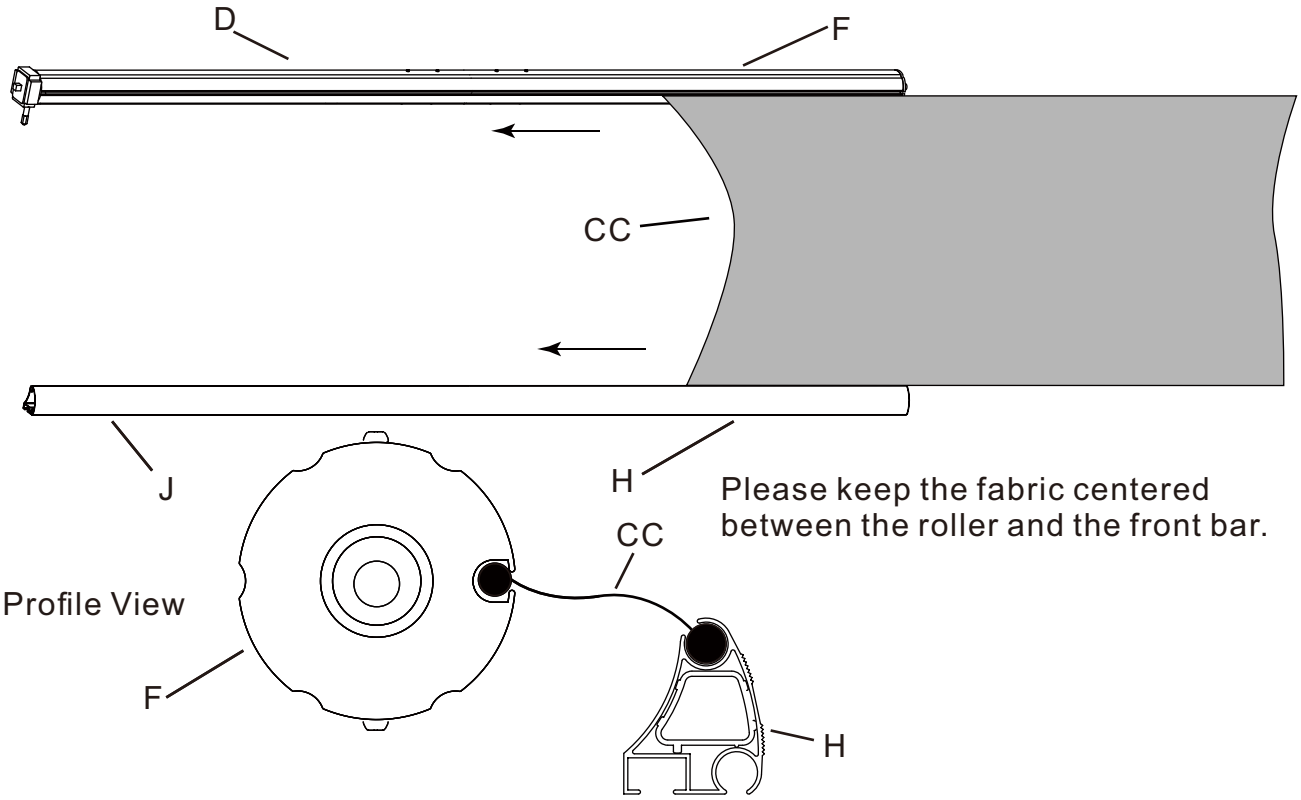

Please keep the fabric centered between the roller and the front bar.

07

Roll up the fabric.

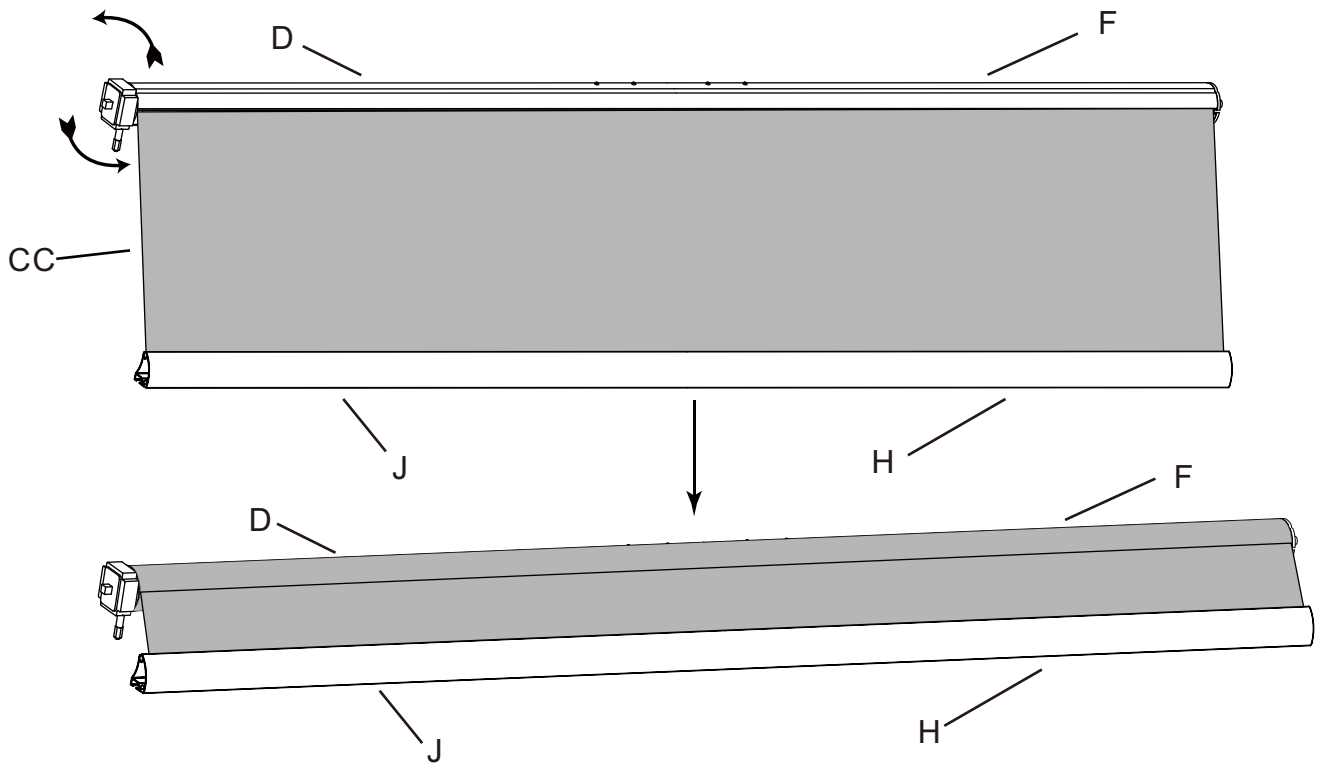

08

Installate the fabric fixer.

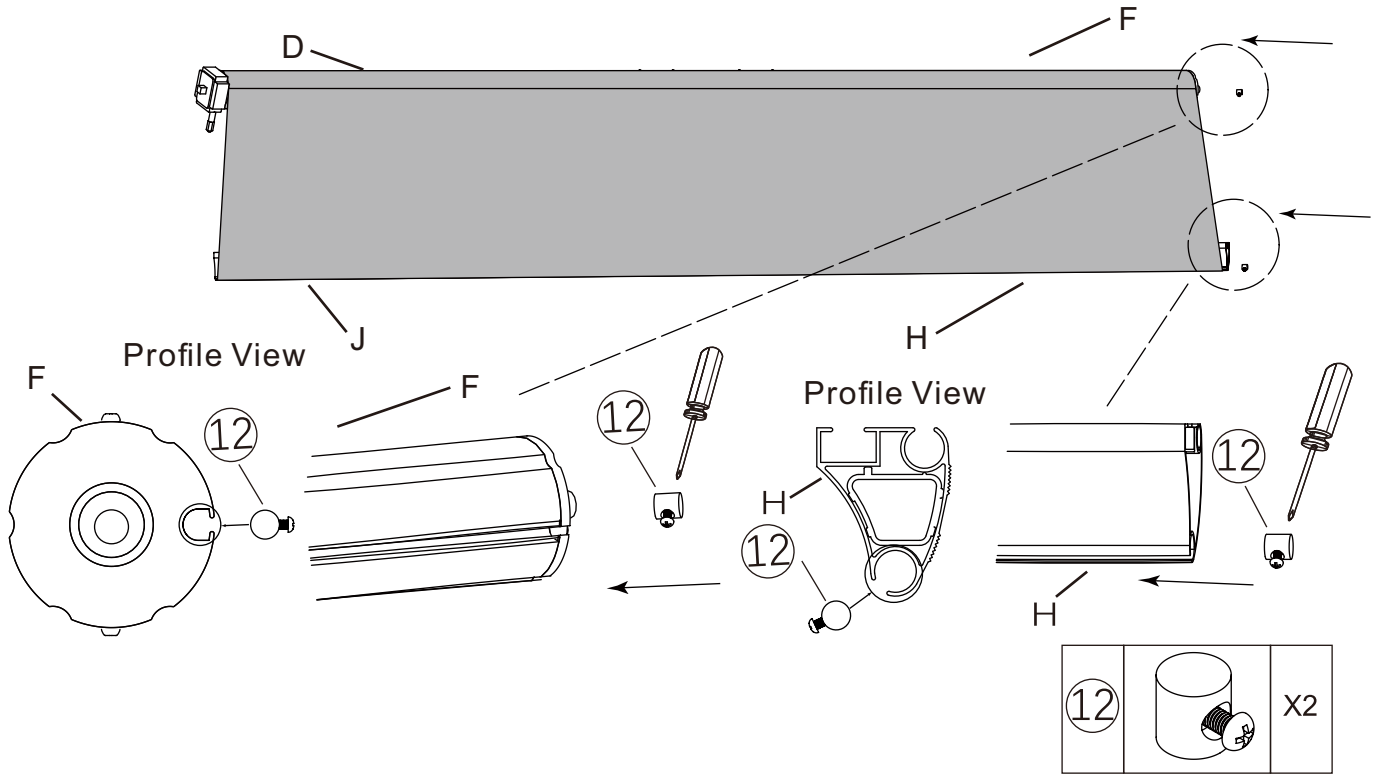

09

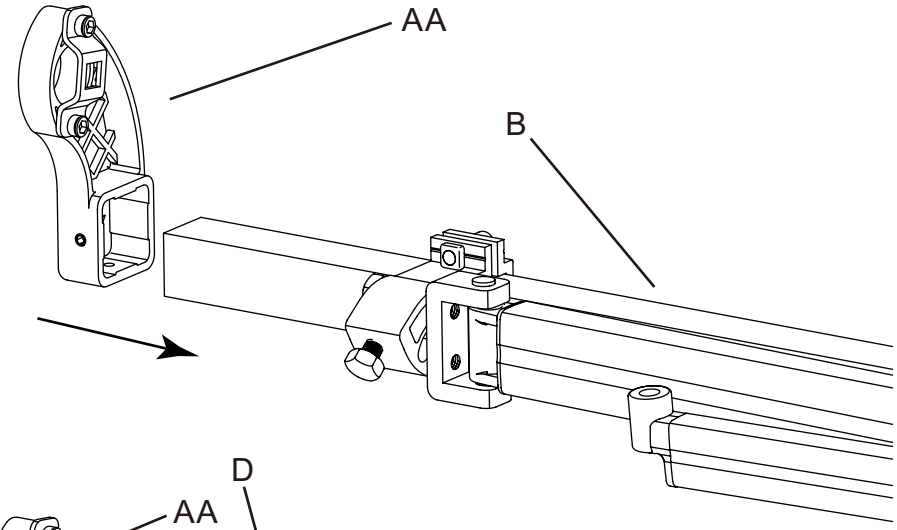

Insert the Square bar into Left Bracket.

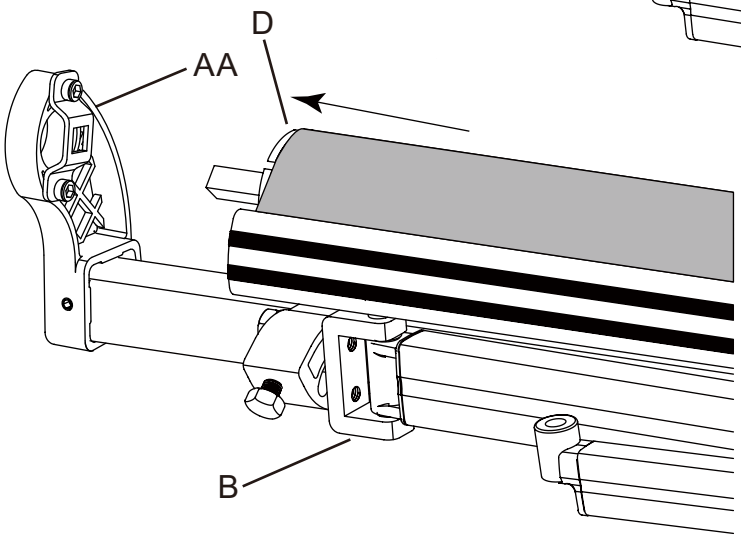

Insert the Roller into Left Bracket

10

Installate the left bracket.

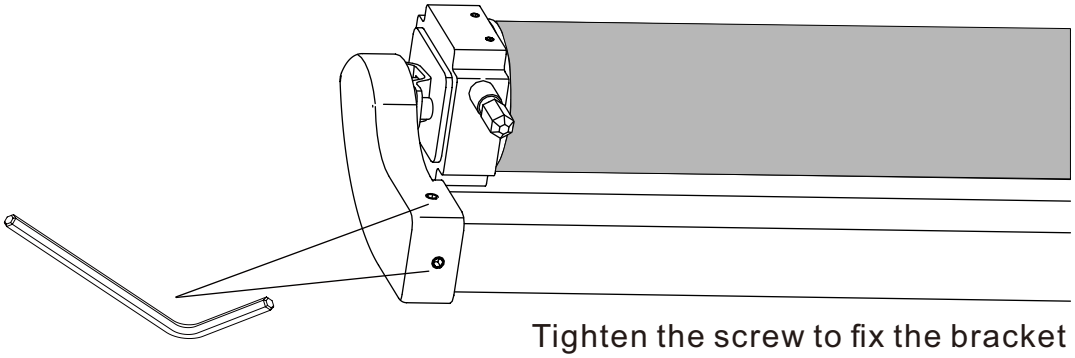

Tighten the screw to fix the bracket and front bar.

Installate the right bracket

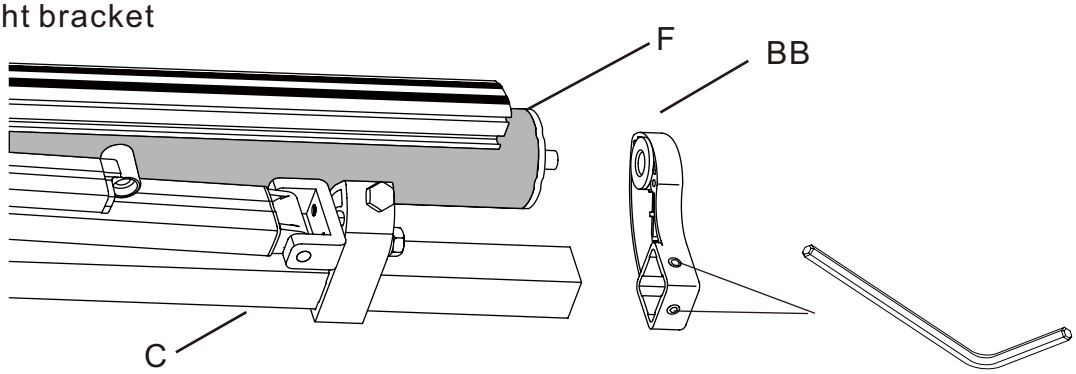

11

Fix the motor with the motor pin

Representation without AA section for better understanding.

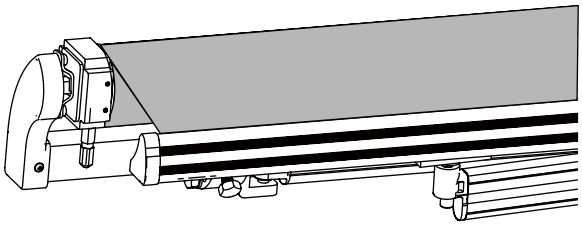

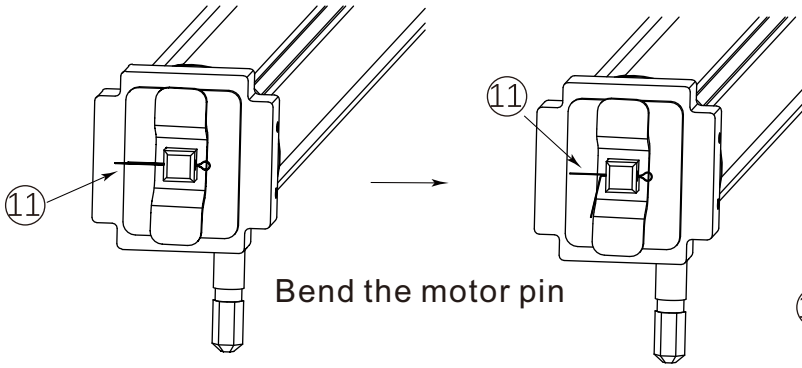

Bend the motor pin

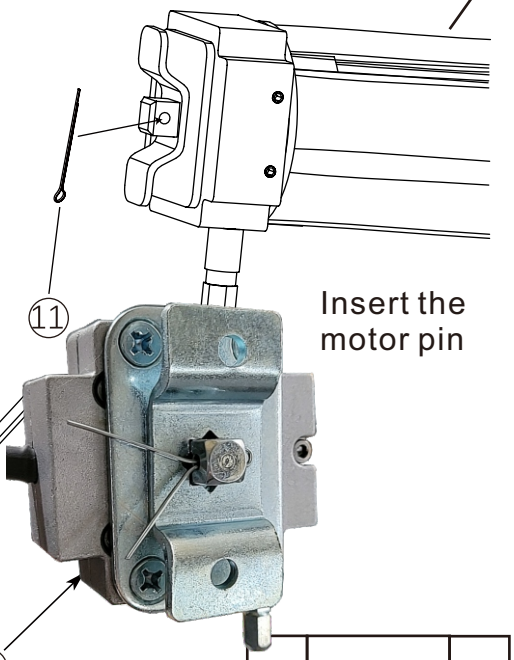

Insert the motor pin

photo

11		X1

12

Insert the connector into the front bar

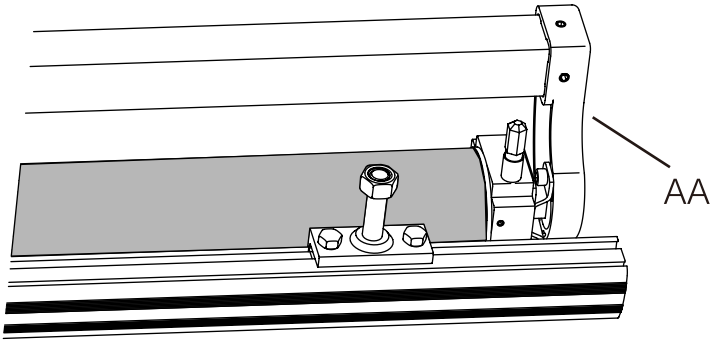

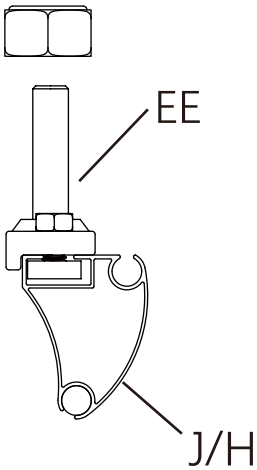

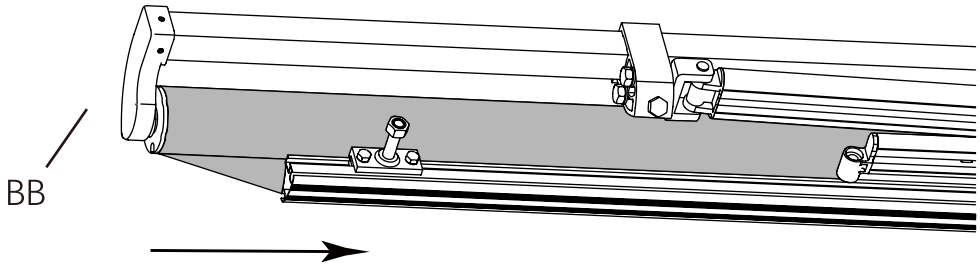

EE		X2

13

Fix the connector

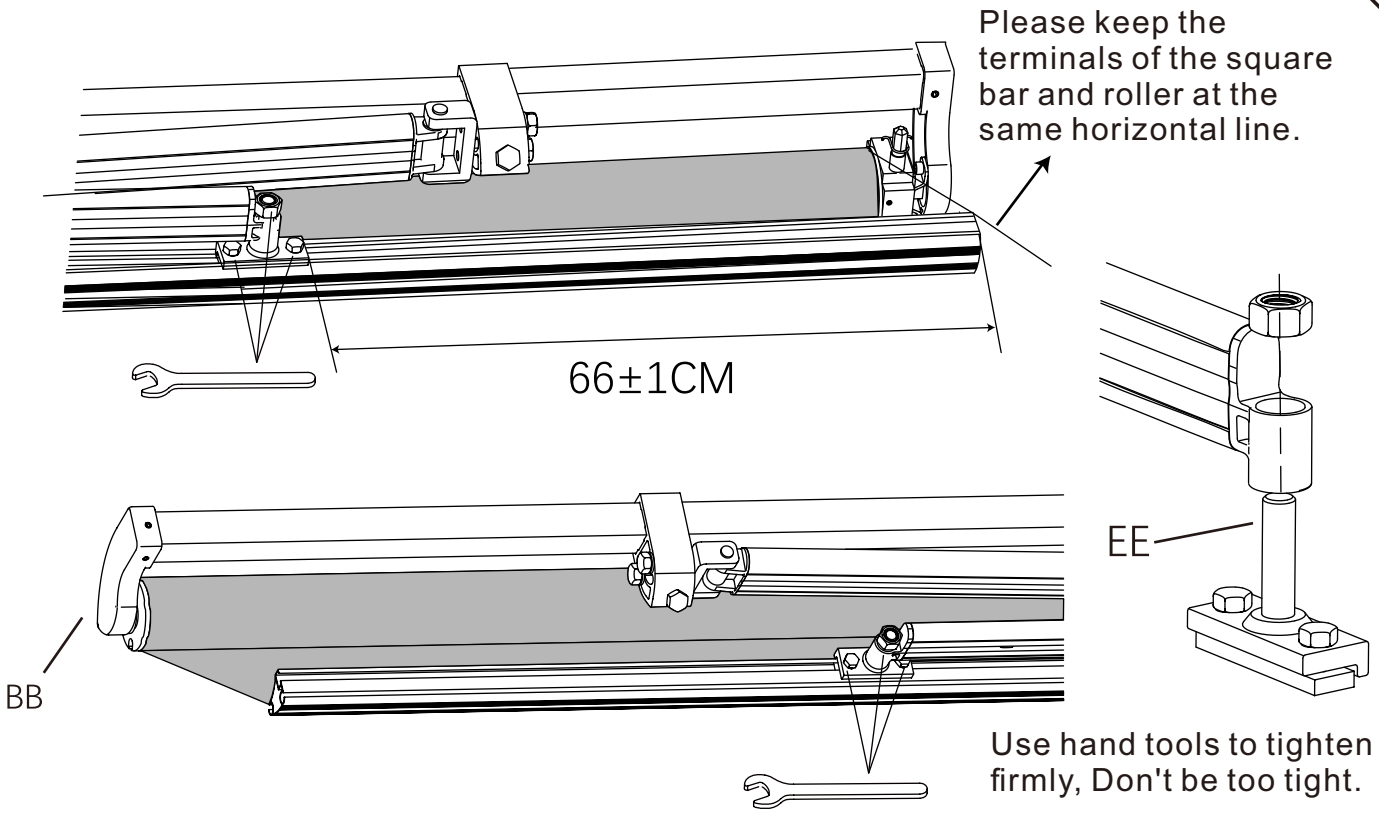

14

Install the fabric supporter.

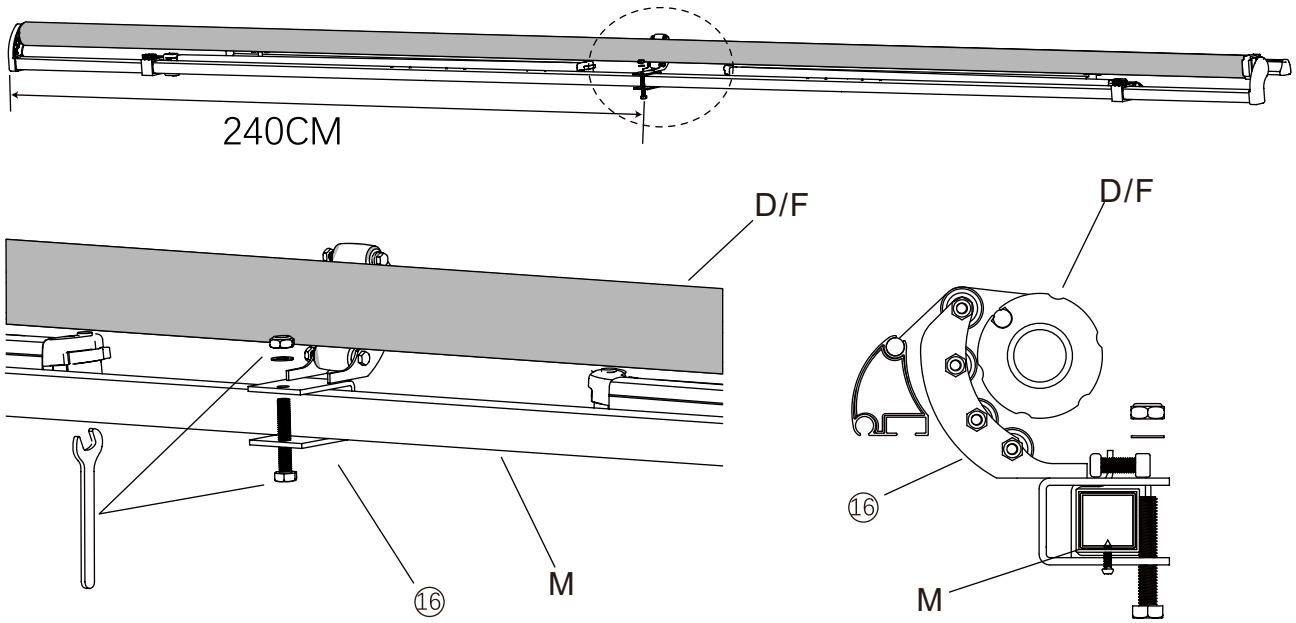

15

Install the Front bar fabric

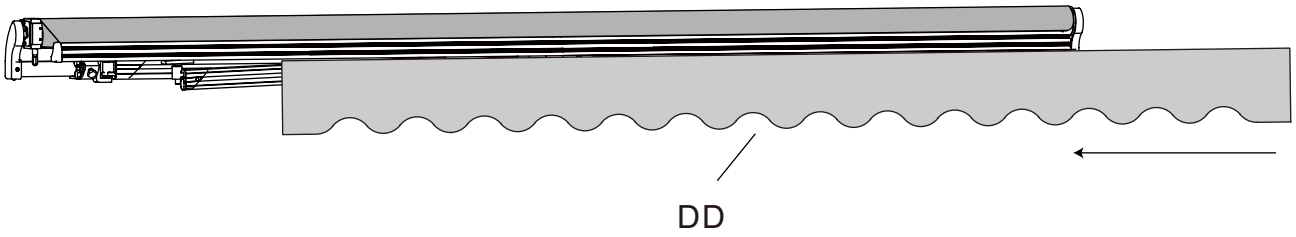

16

Install the End Cap of Front Bar

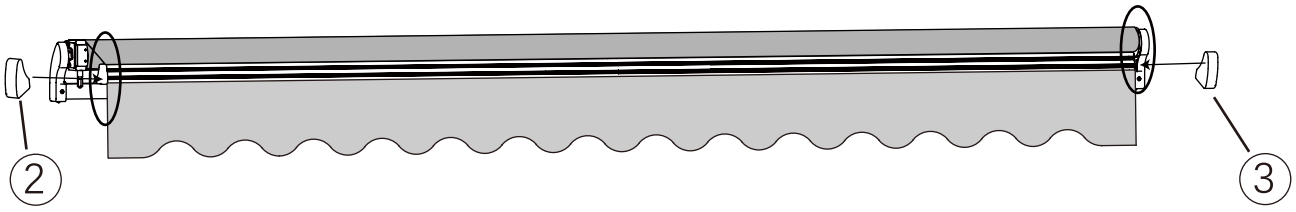

Preparations

Make sure that no children and pets are present during mounting. They could get hurt by lain out parts or tools.

Carefully remove the awning from the box and remove the styrofoam protectors from the awning.Remove the plastic bags and plastic guards from the awning and carefully place the awning aside to avoid having it damaged by scratches or otherwise damaged or soiled during assembly. Check the number of parts in the packaging whether the packing list requirements, the quality of parts availability issues, if questions, please contact the supplier.

⚠ Be aware the sudden extension may occur during unpacking.

Tools needed for assembly:

√ Drill
√ Masonry drill bit, 14 mm
√ Level
√ Wrench
√ Stepladder
√ Tape measure
√ Chalk or marker pen
√ Wooden hammer

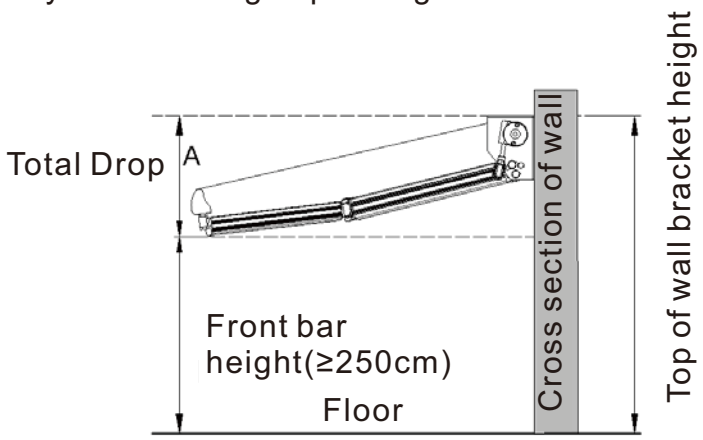

Mounting

⚠ Mounting on a concrete or brick wall

The awnings must be installed at least at the height of 250cm only on a reinforced concrete wall or massive brickwork. Please ask professionals for help if you are not sure

If your building has an exterior shell (such as insulation, double brick wall, brick facing), installation should be taken out by a professional.

If the wall/brickwork shows cracks you have to consult a professional.

⚠ Make sure the wall/ceiling is plain, so that bracket seats solidly.

⚠ WARNING! Two healthy adults with technical knowledge are needed to move and install the awning.

☞ For safe and smooth installation think about where you will be securing the awning to the wall before you start drilling holes.

Step 1: Chose Mounting Location

Ensure that you also take this drop height into account in your decision on where to install the awning. The drop angle can still be changed after assembly. The ideal drop angle, however, has already been set at the factory and may only be changed minimally.

We recommend that the awning front bar has a height of at least 250cm when it is fully extended – if your local conditions to not allow this you can mount the awning in lower position. The horizontal centre line through the lower drilling holes must be 60cm higher than the axis of the front bar to meet the minimum tilt angle of 14°.

In the event you would like to mount it above a balcony door, you should leave a space of at least 20cm above the door frame if there is enough space available above the door frame.

Figure 1:

When choosing mounting location you must take tilt angle into consideration. We recommend that the awning front bar has a height of at least 250cm, total drop A must be at least 60cm. At a height of front bar at 250cm height of centre line through lower drilling holes is 310cm.

Step 2: Mark Drilling Holes
After choosing mounting position you can mark where you need to drill holes for the brackets. Draw a horizontal line at the height of the required place. Use a long taper measure, a level and chalk.
We already marked where and with what width brackets need to be mounted. Measure the width between the brackets and copy it to the line on your wall/ceiling. Hold a bracket with the lower mounting hole on the height for the chalk line to the wall (please refer to figure 2 for correct position of the bracket) and mark the two drilling holes. Use the bracket at centre mark template by running a marker pen through the holes of the brackets. Alternatively you can use the packing to make a centre mark template. Just lay the awning inclusive brackets on the packing and mark the drilling holes. Then hold the template against the wall in corresponding height. Use a level.
Attention: To avoid errors, please manually measure the hole size. The dimensions provided in this manual are for reference only.

Step 3: Drill Holes
Use 14-mm masonry drill to drill the holes for the brackets at the appropriate marks on the wall. The holes should be 9cm deep in the wall and must be drilled through solid masonry or concrete. Do not bore through mortar because this does not offer the strong enough support for the heavy duty anchors, which are required for the installation of awning.
Use 14-mm masonry drill to drill 9cm deep holes.

Step 4: Insert Heavy Duty Anchors
After drilling, clean the holes by blowing them out. Then insert the heavy duty anchors into the holes.
Before inserting lose the nut, washer and clamp ring. Put them at the side, so that you have it at your fingertips.
Step5:Hang on the awning
Insert the explosion screws, and left0.5cm,hang on the awning,then tight the screws.

⚠ Attention: If you find that there is no resistance when you pull out the nut of the heavy duty anchor, then the heavy duty anchor has not enough anchorage. You have to repeat the complete mounting with a minimum offset of 15cm!

☞ As soon as they are fully inserted, the brackets must sit firmly in the wall. If they are still moving in any form, you must further tighten it.

☞ Do not try to secure the wall brackets to loose wall stones or any surfaces that are not absolutely firm connected to brickwork.

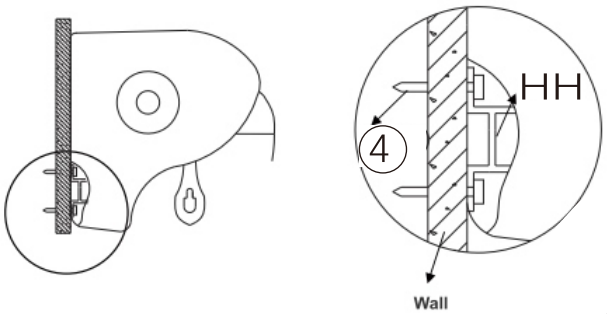

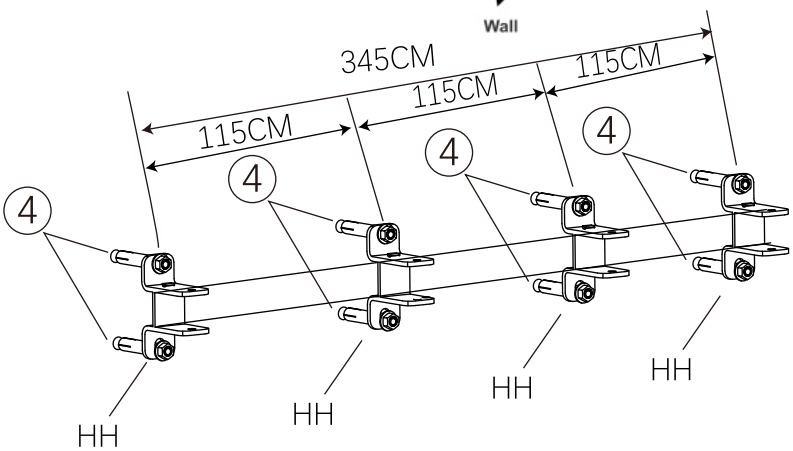

Horizontal installation on the same wall.

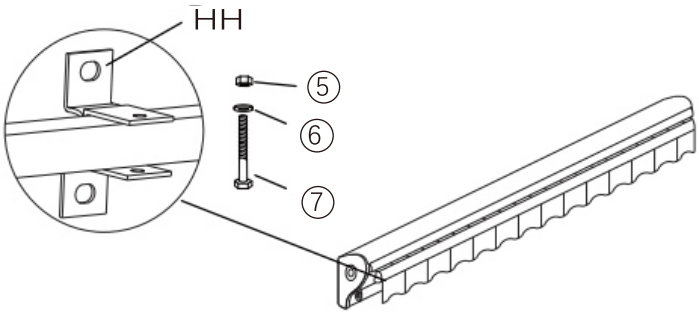

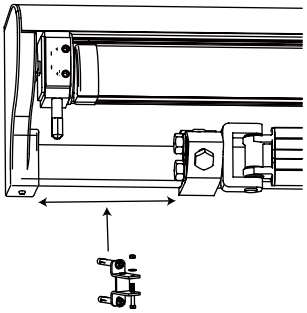

Note: The number of attachments may vary depending on the length of the product. To avoid errors, the dimensions specified in the text may be distorted, and the installation position of the boom should be maintained at the specified middle position.

The awnings are intended as a protection against the sun only. It is not to be used during periods of strong wind, rain, hail, or snow. In case of such conditions, retract the awning immediately.
Never allow children to play with the awning.
Be sure the fabric is tensioned. If the fabric is not tensioned during extension, please turn counter-clockwise until the fabric is tensioned.
Do not put any objects or parts of your body e. g. hands, in the awning while extending and retracting. Hazard of crush!
When the front bar touches the roller as shown in following figure during retraction, don't try to make them closer, otherwise the product might be damaged.
Take out the crank handle from loop after adjusting the awning as you wish and put it on a place that is not reachable for children to avoid that they play with the awning.

Maintenance
Regular maintenance will not only help to keep a long durability but is also important for your own and the safety of other people.
●Examine regularly if wall brackets are tight, fasten them if loose or lax.
●Examine the gear box once in half a year. If you find any damages stop using the awning until gear box has been repaired or renewed.
●Examine the bolts and nuts once in half a year, fasten them if loose or lax.
●Stop using the awning immediately if is has been damaged or it is not tighten properly.

⚠ WARNING

- **INGESTION HAZARD**: This product contains a button cell or coin battery.
- **DEATH** or serious injury can occur if ingested.
- A swallowed button cell or coin battery can cause **Internal Chemical Burns** in as little as **2** hours.
- **KEEP** new and used batteries **OUT OF REACH of CHILDREN**
- **Seek immediate medical attention** if a battery is suspected to be swallowed or inserted inside any part of the body.

Battery
1.)Battery type:CR2025
2.)Nominal Voltage 3V

Instructions and manuals
a) Remove and immediately recycle or dispose of used batteries according to local regulations and keep away from children. Do NOT dispose of batteries in household trash or incinerate.
b) Even used batteries may cause severe injury or death.
c) Call a local poison control center for treatment information.
d) A statement indicating the compatible battery type Cr2025.
e) A statement indicating the nominal battery voltage.
f) Non-rechargeable batteries are not to be recharged.
g) Do not force discharge, recharge, disassemble, heat above (manufacturer's specified temperature rating) or incinerate. Doing so may result in injury due to venting, leakage or explosion resulting in chemical burns.
h) Ensure the batteries are installed correctly according to polarity (+ and -).
I) Do not mix old and new batteries, different brands or types of batteries, such as alkaline, carbon-zinc, or rechargeable batteries.
j) Remove and immediately recycle or dispose of batteries from equipment not used for an extended period of time according to local regulations.
k) Always completely secure the battery compartment. If the battery compartment does not close securely, stop using the product, remove the batteries, and keep them away from children.

!!! DON'T REVERSE THE ROLLER. THE FABRIC SHOULD RUN OUT OF AWNING ON THE TOP OF ROLLER.

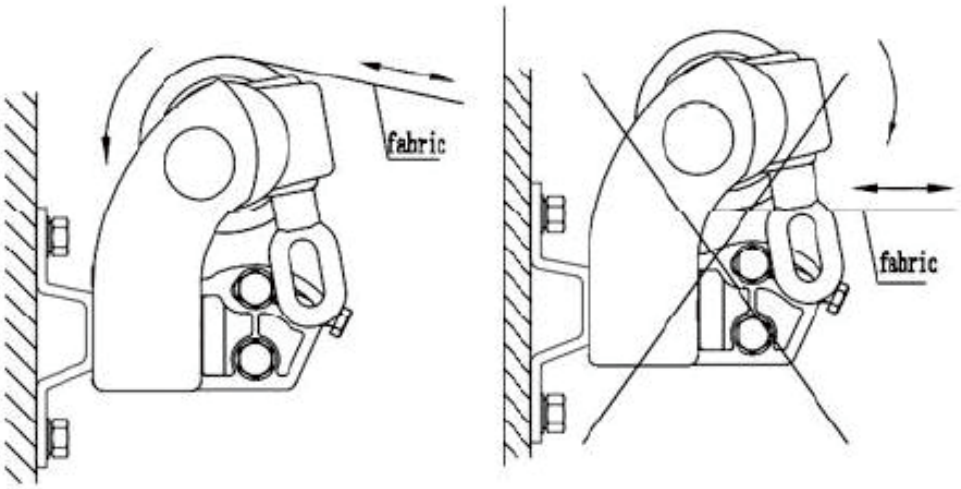

MOTOR SETUP

CAUTION: THE MOTORS WORKS FOUR MINUTES CONTINUOUS, THEN IT WILL STOP WORKS. BUT DON'T WORRY, IT WILL CONTINUE TO WORK AFTER 10-15 MINUTES. THE MOTOR NEED 4-5 HOURS TO AMBIENT TEMPERATURE.

CAUTION: DO NOT CLOSE THE AWNING TOO TIGHTLY, IT MAY DESTORY THE AWNING.

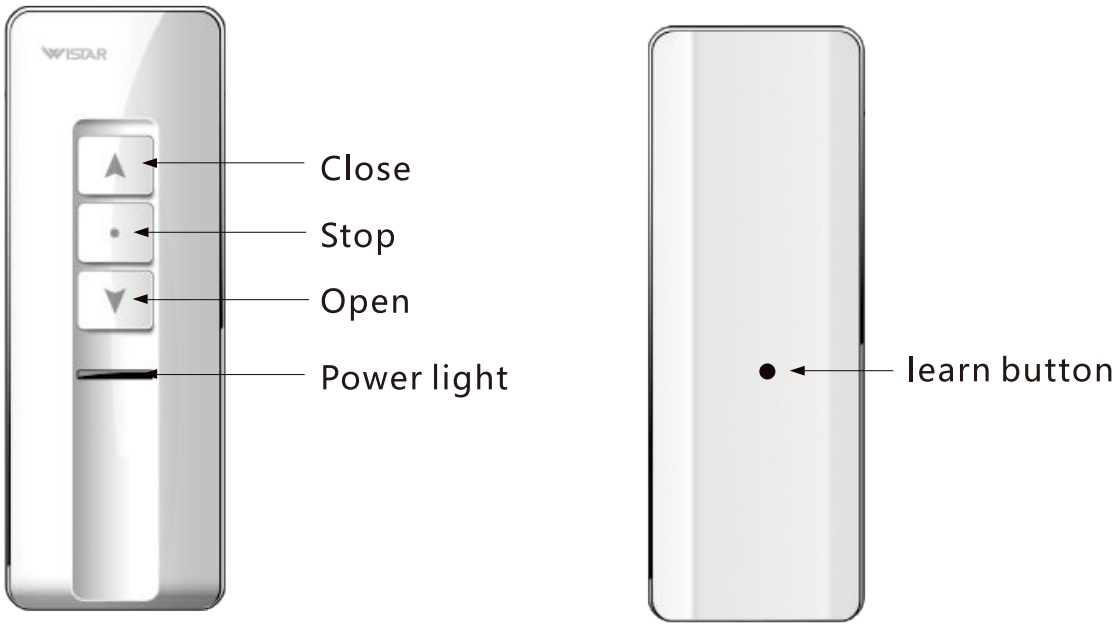

Step1. Code Learning

1)Power on, the motor will vibrate.

2)Press the learning button once within 5 seconds, the motor will vibrate again.

3)The remote can control the awning.

Note:
a)If you press the learn button for more than five seconds, the motor will not vibrate. You should turn off the power and try again.

Step2. Set the Opening Stop Position.

Note:
a) The open limit is about one meter , that means the motor will stop when the awning is opened for about one meter. At this time, you can continue adjust the pointed nuts to “+”,until it reaches the ideal open position.(The awning is fully opened and the fabric is tensioned.)
b) When you set the open limit, if the motor still does not stop when open awning to the appropriate position, close the awning and open it again. While it is opening, adjust the same pointed nuts to “-”(clockwise),until it stop. Then adjust the pointed nuts to“+” ,until it reaches the ideal open position.(The awning is fully opened and the fabric is tensioned.)

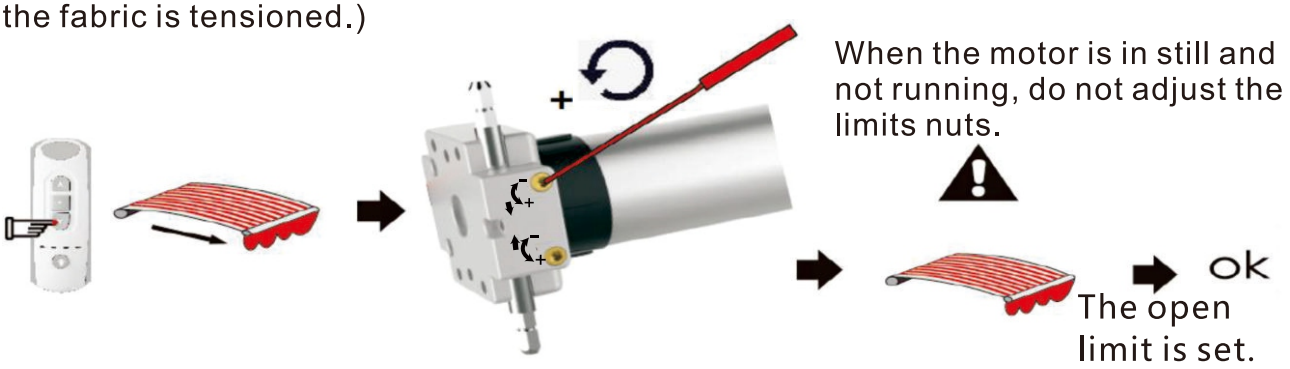

Power On, Press the Down button to move the awning running open.

If the open limit needs to be moved outwards, adjust the pointed nuts to“+”.

When the awning reaches the ideal open position, stop turning the nuts. Press the Stop button.

Step3. Set the Close Stop Position.

Note:
a) The close limit is near the close position. When it stop, you can continue adjust the pointed nuts to “+”,until it reaches the ideal close position.
b) When you set the close limit, if the motor still does not stop when close awning to the appropriate position, press the open button to open the awning and close it again. While it is closing,adjust the same pointed nuts to “-”(clockwise),until it stop. Then adjust the pointed nuts to“+” ,until it reaches the ideal close position.

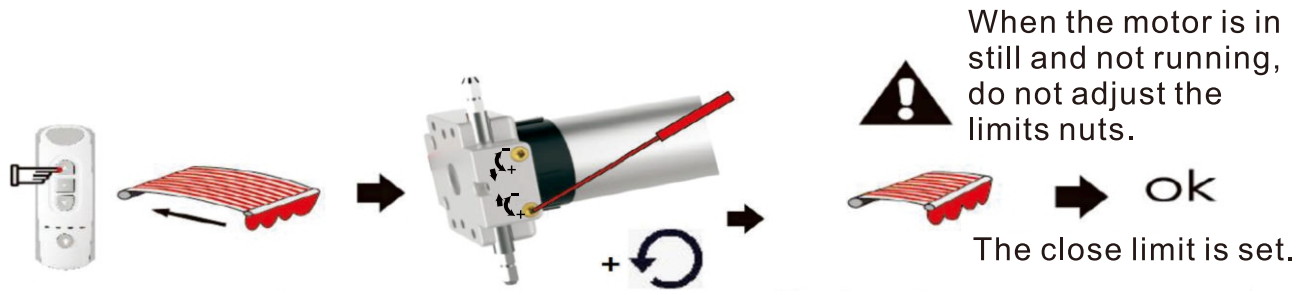

Power On, Press the Up button to move the awning running close.

If the close limit needs to be moved inwards, adjust the pointed nuts to“+" .

When the awning reaches the ideal close position, stop turning the nuts.
Press the Stop button.

17

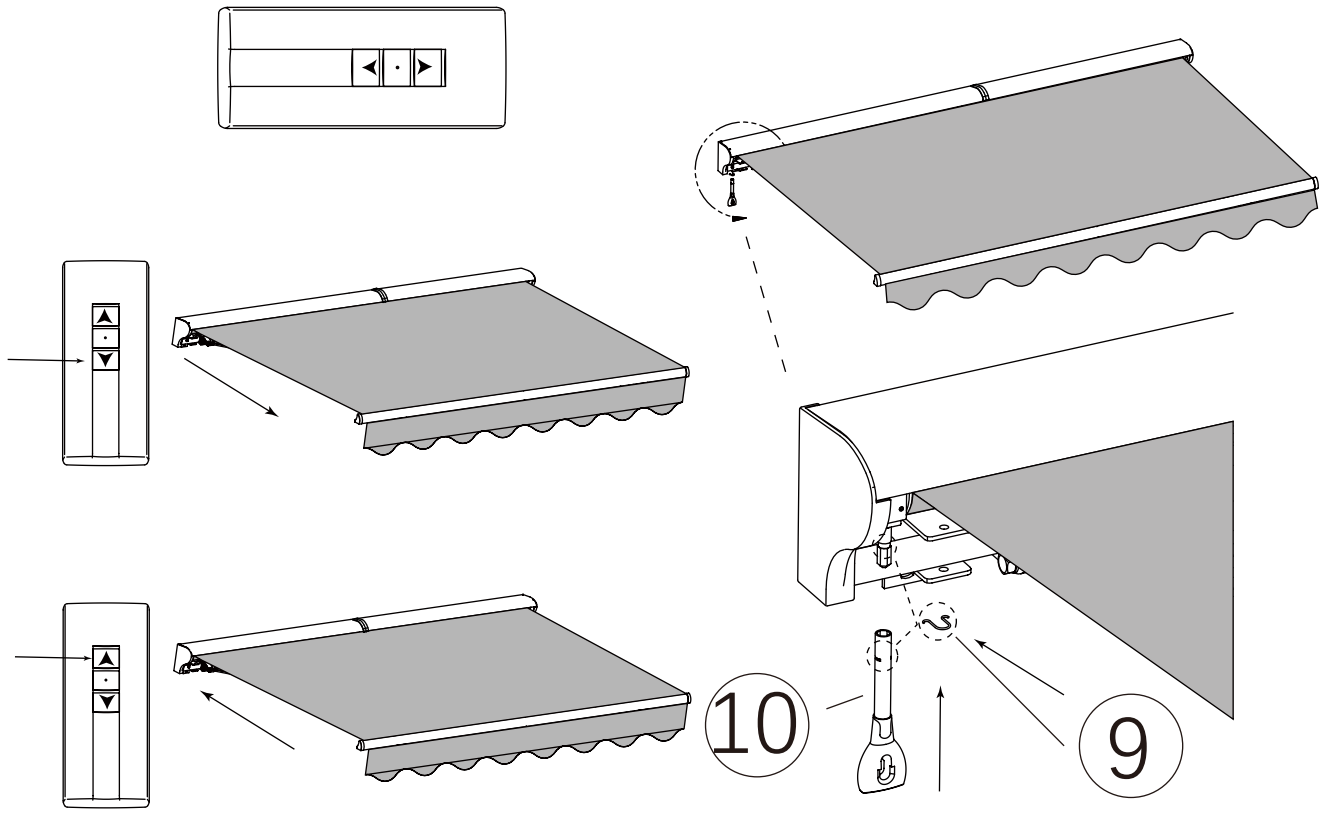

18

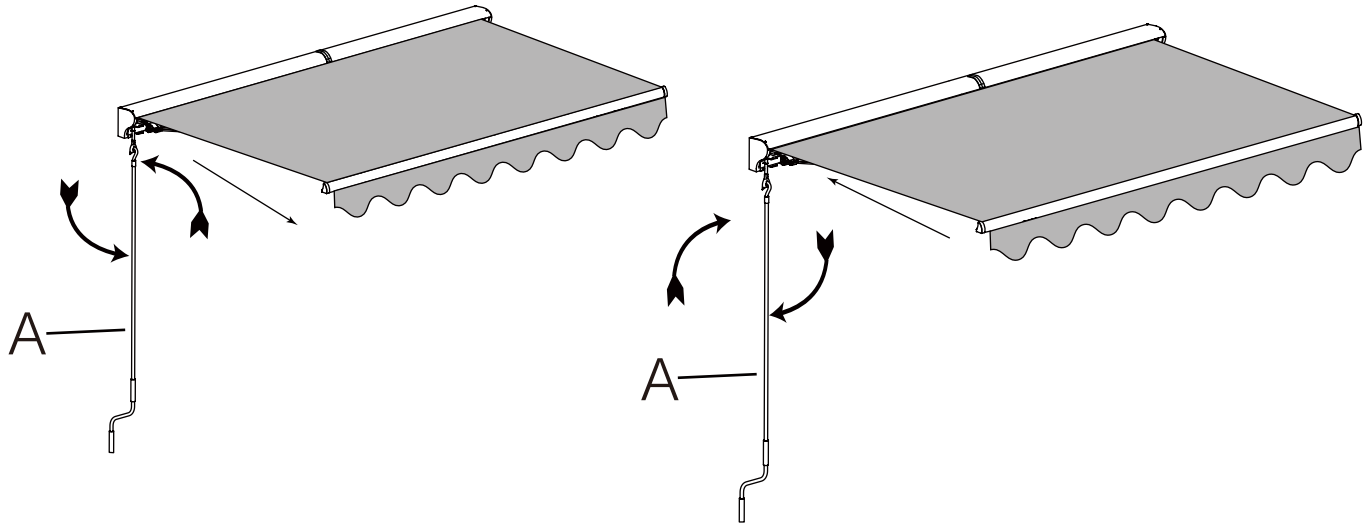

Technical data

- Power supply: excluding 3V CR2032 type
- Working temperature: -10 C to+ 60 C (LCD transmitter)
- Working temperature: -20 C to+ 60 C (non LCD transmitter)
- Current:≤12mA
- Code: Scroll Code
- Frequency;: 433.92MHz

Please contact an authorized service center for repair and if you have any further questions.
Normally it is not necessary to lubricate moving parts of the awning. However, if it will be come necessary on day, e. g. because of abnormal noise or because extracting is difficult, do only use lubricants that can be used for plastic materials, do not use lubricants that are based on petroleum.
Use a straw attached to the spray nozzle. Lubricate generously the area between the end of the roller tube and the end bracket (pivot pin). Take care not to over spray on the fabric material.

Cleaning
Frame: Over time, dust and dirt will collect on the frame and will require periodic cleaning to maintain its appearance.
A mild spray cleaner or water/detergent mixture may be applied to the frame to clean it. Wipe dust off with a damp cloth. Do not use aggressive detergents e. g. to clean oil residues.
Fabric: Clean the fabric every six months.
Only use natural soap, never use chemical detergents. Water should be cold to lukewarm. Let the fabric dry completely. Do not use heating appliances e. g. hair dryer for drying.

Dismounting
When you don't want to use the awning anymore or if you want to dispose it one day you have to dismantle it.
Attention! At least two healthy adults are need for this step.
●Retract the awning completely before you begin with dismounting. Bind the arms of the awning together to avoid unintended unfolding. This might cause damage and injury. You can use the protection band that was fixed on the awning when purchasing it.
●Follow the mounting instructions in reversed order to dismount the awning.
●Make sure that drilling holes in the wall will be sealed professional.
Attention! Safety hints and instructions have to be followed for dismounting as well.

Storage
When you do not want to use the awning for a longer period of time it is recommended to take the awning out of the brackets and store it.
●Make sure that the fabric is dry completely before storing. Storing a wet fabric can cause spots and damage.
●Store the awning at a dry and safe place that is not reachable for children.

Disposal
Do not dispose this awning with other household wastes. To prevent possible harm to the environment or human health from uncontrolled waste disposal, recycle it responsibly to promote the sustainable reuse of material resources. To return your used device, please use the return and collection systems or contact the retailer where the product was purchased. They can take this product for environmental safe recycling. Dispose packing materials according to local guidelines.

US

If you have any questions, please contact our customer care center, Our contact details are below:

001-877-644-9366

customerservice@aosom.com

Imported by Aosom LLC
27150 SW Kinsman Rd Wilsonville, OR 97070 USA
MADE IN CHINA

CA

If you have any questions, please contact our customer care center, Our contact details are below:

416-792-6088

customerservice@aosom.ca

Imported by Aosom Canada Inc.
7270 Woodbine Avenue, Unit 307, Markham,
Ontario Canada L3R 4B9
MADE IN CHINA

Si vous avez la moindre question, veuillez contacter notre centre d'assistance à la clientèle,Nos coordonnées sont les suivantes:

416-792-6088

customerservice@aosom.ca

Importé par Aosom Canada Inc.
7270 Woodbine Avenue, unité 307,
Markham, Ontario Canada L3R 4B9
FABRIQUÉ EN CHINE

UK

If you have any questions, please contact our customer care center, Our contact details are below:

0044-800-240-4004

enquiries@mhstar.co.uk

IMPORTER ADDRESS:
MH STAR UK LTD
Unit 27, Perivale Park,
Horsenden lane South
Perivale, UB6 7RH
MADE IN CHINA

DE

Wenn Sie Fragen haben, wenden Sie sich bitte an unser Kundendienstzentrum,Unsere Kontaktdaten stehen unten:

0049-0(40)-88307530

service@aosom.de

ADRESSE DES IMPORTEURE/Hersteller/REP:
MH Handel GmbH
Wendenstraße 309
D-20537 Hamburg
Germany
IN CHINA HERGESTELLT

IT

In caso di dubbio, si prega di contattare il nostro centro assistenza clienti,I nostri dettagli di contatto sono di seguito:

0039-0249471447

clienti@aosom.it

IMPORTATO DA/Produttore/REP:
AOSOM Italy srl
Centro Direzionale Milanofiori
Strada 1 Palazzo F1
20057 Assago (MI)
P.I.: 08567220960
FATTO IN CINA

ES

Si tiene alguna pregunta, comuníquese con nuestro Centro de Atención al Cliente,Nuestros datos de contacto son los siguientes:

0034-931294512

atencioncliente@aosom.es

IMPORTADOR/Fabricante/REP:
SPANISH AOSOM, S.L.
C/ROC GROS,Nº15.08550, ELS HOSTALETS DE BALENYÀ, SPAIN.
B66295775
HECHO EN CHINA

PT

Se tiver alguma dúvida, por favor contacte o nosso Centro de Atendimento ao Cliente,Os nossos dados de contacto são os seguintes:

0034-931294512

info@aosom.pt.

IMPORTADOR/Fabricante/REP:
SPANISH AOSOM, S.L
C.ROC GROS N.15, 08550. ELS HOSTALETS DE BALENYÀ
FEITO NA CHINA

FR

Si vous avez la moindre question, veuillez contacter notre centre d'assistance à la clientèle,Nos coordonnées sont les suivantes:

0033-1-84166106

aosom@mhfrance.fr

Importé par/Fabricant/REP:
MH FRANCE
2 Rue Maurice Hartmann
92130 Issy Les Moulineaux
France
FABRIQUÉ EN CHINE