Assembly Instructions

Caution : You must read this before you proceed

Barstool

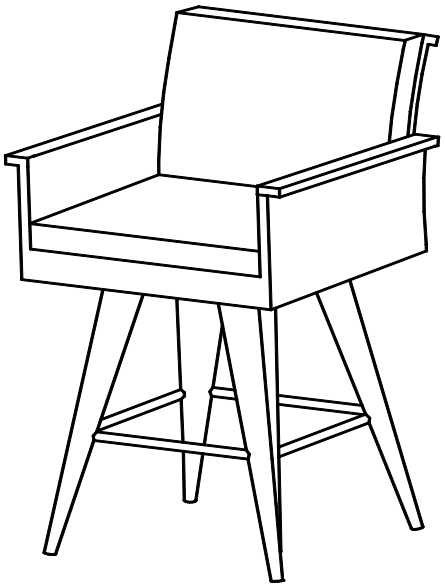

Parts List

Label	Picture	Description	QTY
A	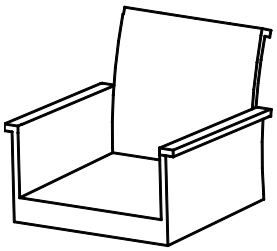	Seat	1
B	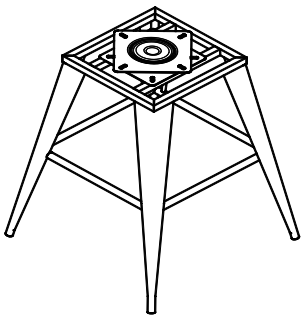	Legs	1

C		Seat Cushion	1
D		Back Cushion	1

Hardware

Label	Picture	Description	QTY
①		Bolt (M8*35mm)	5
②		Washer	9
③		Nut	5
④		Wrench	2

Assembly Preparation

Before Beginning Assembly:	

- Read instructions, cover to cover-
- Have 2 adults on hand for assembly-
- Do not assemble on flooring or carpet-
- Assemble on a clean non-marring surface (packing foam)-
- Save all packaging until finished-

Assembly Steps

Overview

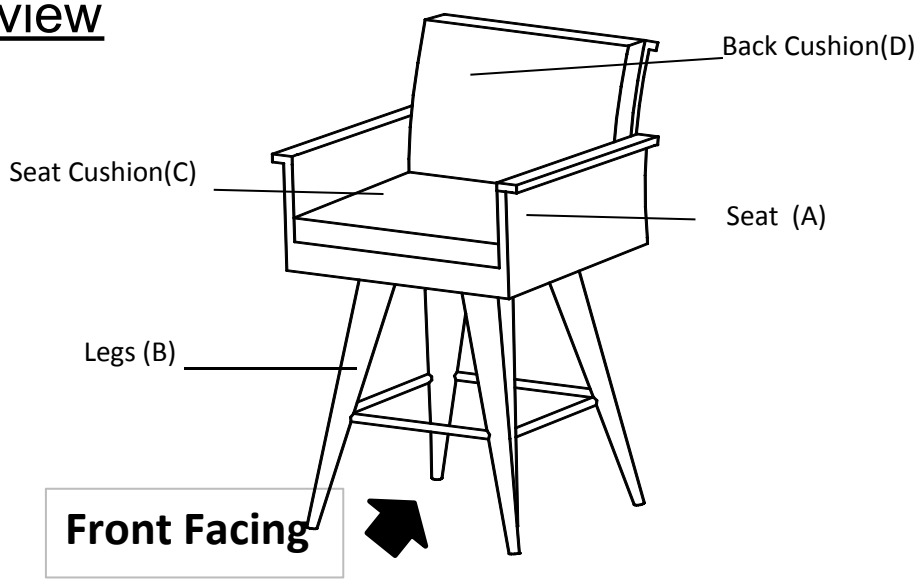

This Barstool has multiple parts and may require up to 30 minutes to assemble. To give you an overview of the Barstool parts, the above picture is to help you put the various parts into perspective. Please read through the instructions below to familiarise yourself with the parts and steps before assembly.

Step 1

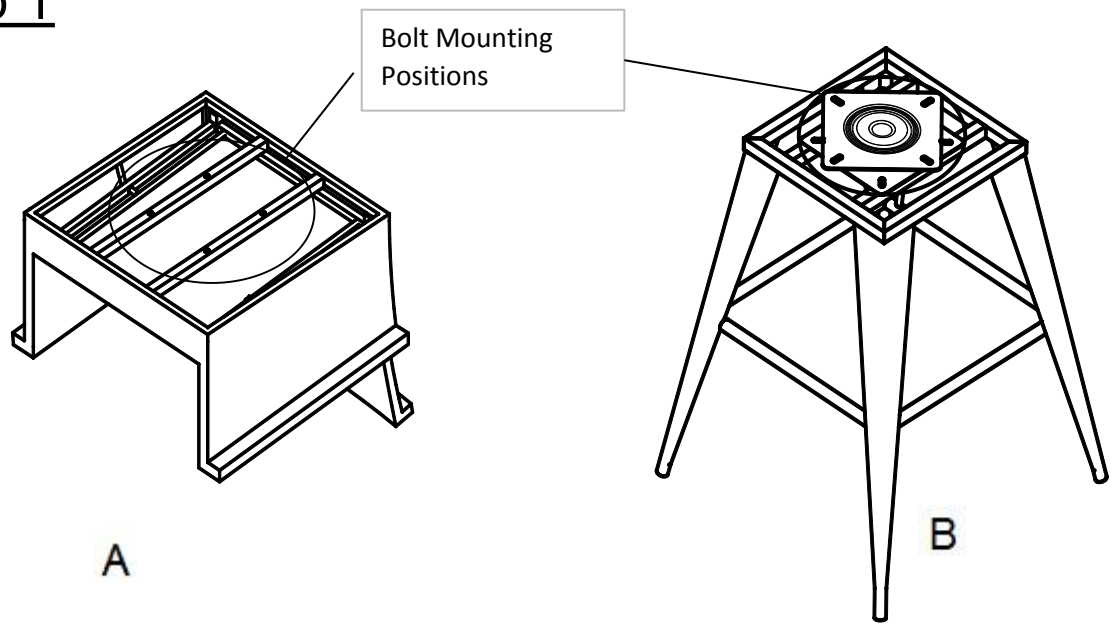

Open the carton, and place all parts on a clean, non-marring surface.
Place the Seat(A) facedown on the clean, non-marring surface as shown above.

Step 2

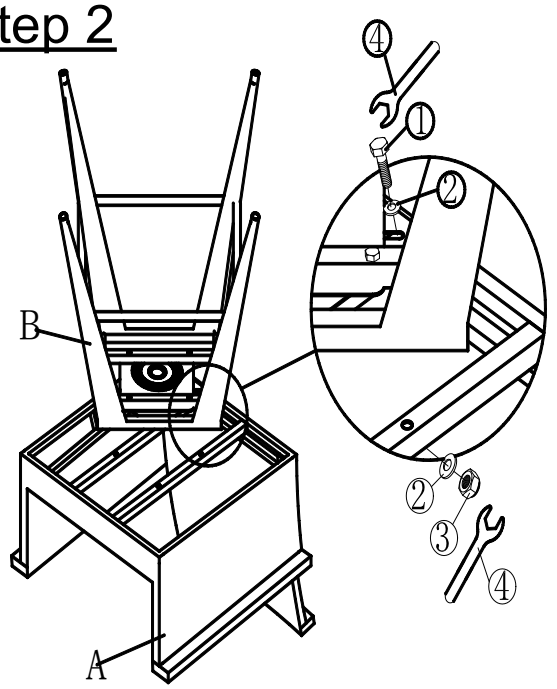

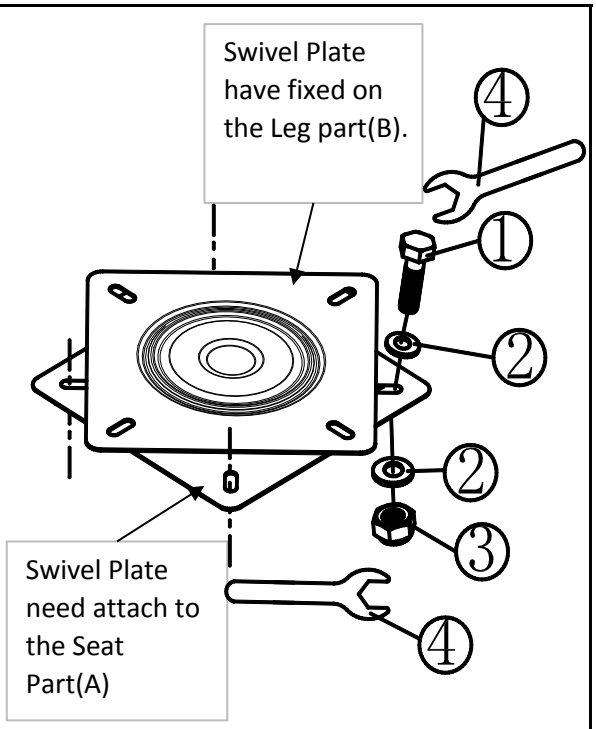

Turn the Legs(B) over and place it onto the Seat(A) as shown above.
Then turn the Swivel Plate some 45° to the position as shown above.
Align the Bolt mouting positions of the Swivel Plate with those on the Seat(A).
Attach Legs(B) to Seat(A) using Bolts(①), Washers(②), and Nuts(③) with the Wrenches(④) as pictured above.
Tighten all Bolts and Nuts fully in a sequential manner.
Caution: During the assembly process, DO NOT place fingers between the Seat(A) and Legs(B).

Step 3

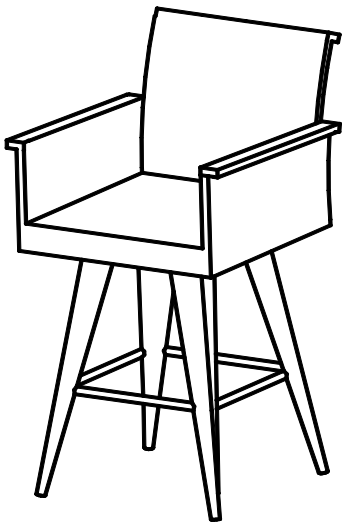

Ensure that all Bolts and Nuts are securely tightened.
Stand the Barstool up.

Step 4

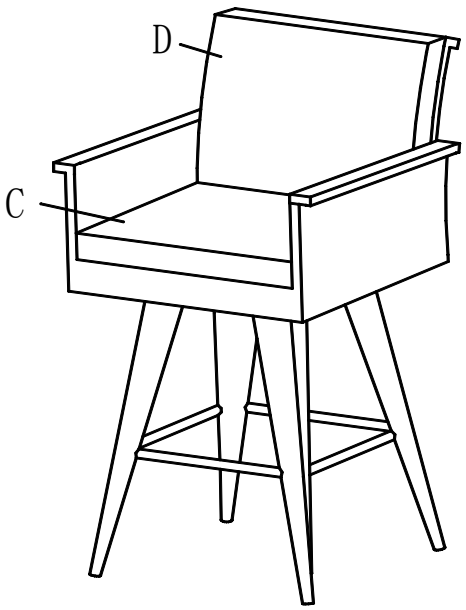

Place the Seat Cushion(C) and Back Cushion(D) on the Barstool.
Your Barstool is ready for use.
This Barstool can only be used on a flat, level surface.

Care &Maintenance

- Do not put hot items directly on furniture surface
- Do not clean furniture with harsh cleansers or polish.
- To obtain the longest lifespan of your outdoor prodcts, minimizing exposure to direct sunlight is recommended.
- Children should not climb or jump on the furniture.
- Do not write on furniture without a padded barrier to protect the surface.
- To obtain the longest lifespan of your outdoor products, avoid extended and lengthy exposure to rain, snow, and direct sunshine. Whenever possible cover the product and /or place under patio or awnings.
- Not for commercial use. For residential use only .
- Stains may be removed with mild soap solution and damp cloth.
- Keep away from sources of ignition.

- Dust and pick-up spills using a clean, non-colored, lint-free cloth .

What is Proposition 65?

Proposition 65 is a California law that requires warning labels on products that may contain one of more than 800-plus chemicals or ingredients that the California Office of Environmental Health Hazard Assessment (OEHHA) has deemed to cause cancer or other reproductive toxicity. Chemicals and elements on this list include wood dust, brass, and other everyday substances, which can be found in very common household items, such as: lamps, tableware, jewelry, crystal glasses, electric cords, beauty products, automobiles, and furniture.

Why Did I Find a Proposition 65 Warning on My Home Goods Product?

We include Proposition 65 warnings on all of our products because there is always a chance that one of the 800-plus common chemicals and ingredients listed under this law could potentially be on our furniture or packing materials. We risk large fines under this law, if we don't include this warning.

Should I worry?

We realize you may be worried finding this warning on our products, but we want to reassure you that the hazardous exposure limits for any of these chemicals have never been found on furniture products that we've shipped to our customers. Additionally, this warning label is very common and can be found on almost every piece of furniture sold in the state of California.

Just How Common Are Proposition 65 Warnings?

Proposition 65 warnings have become so common in California that it is hard to take a trip to a local bank, grocery store, or restaurant without finding at least one warning. In fact, even the Disney Land Resort has a Proposition 65 warning: