Item#	Qty	Description	MATERIAL
1	1	RAIL ASSEMBLY	WOOD
2	1	TOP ASSEMBLY	WOOD
3	2	DRAWER ASSEMBLY	WOOD, METAL
4	1	BASESTRIP	WOOD
5	4	BLACK FELT PAD	FABRIC
6	2	CHANNEL MOULDING	PLASTIC
7	2	RIGHT CABINET GLIDE	METAL, PLASTIC
8	2	LEFT CABINET GLIDE	METAL, PLASTIC
9	2	HANDLE	METAL
10	1	UNIT BACK	WOOD

E

G

F

Scale: 1:33.3	TOLERANCES ARE: METRIC---------- +.5 / -.5mm DECIMAL---------- 0 / -.005" FRACTIONAL---------- +0/ -1/32" (UNLESS OTHERWISE SPECIFIED)
Desc: Nightstand	
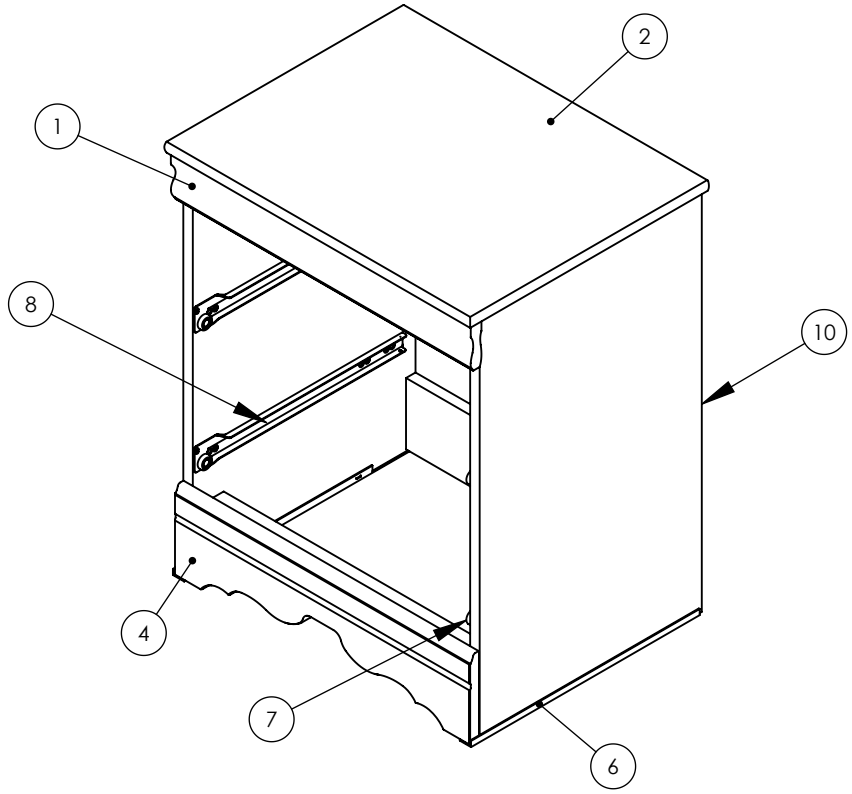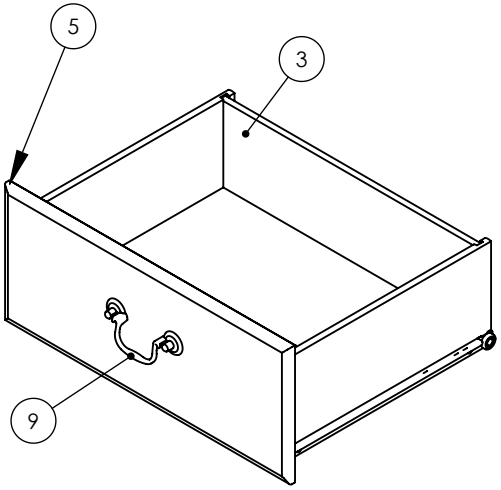
Rev.	Description	Cad/Eng
E	CABINET GLIDE WAS DRAWER GLIDE AND UPDATED PARTS LIST	LB/TH
F	UPDATED PRINT AND REMOVED OLD REVISIONS	TH
G	ADDED ITEM 10 & UPDATED PARTS LIST	JRP/TH