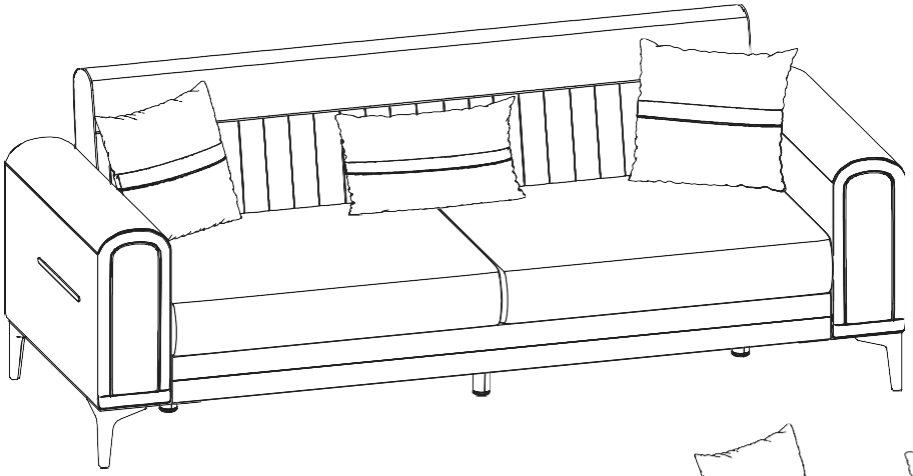

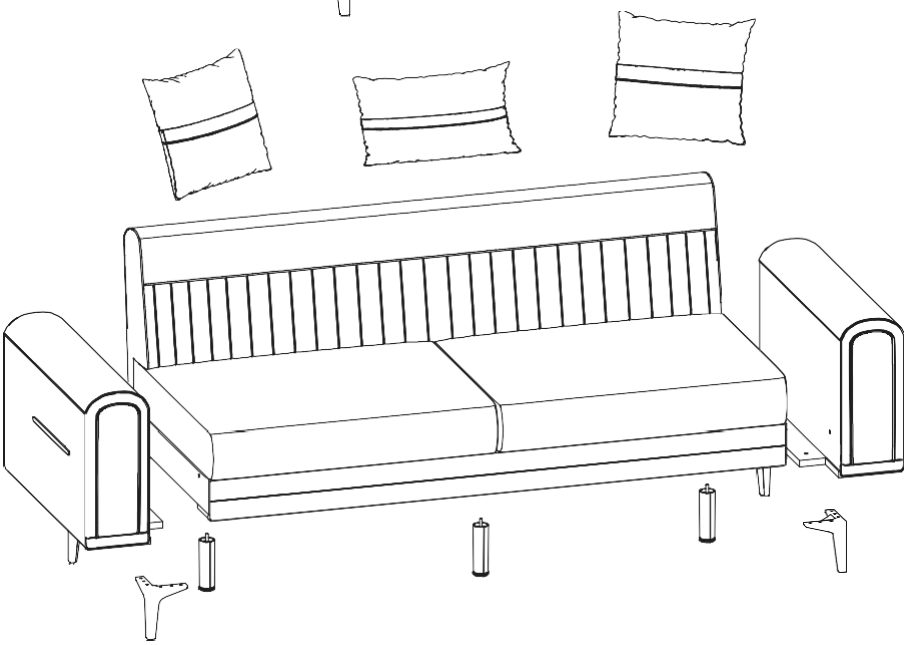

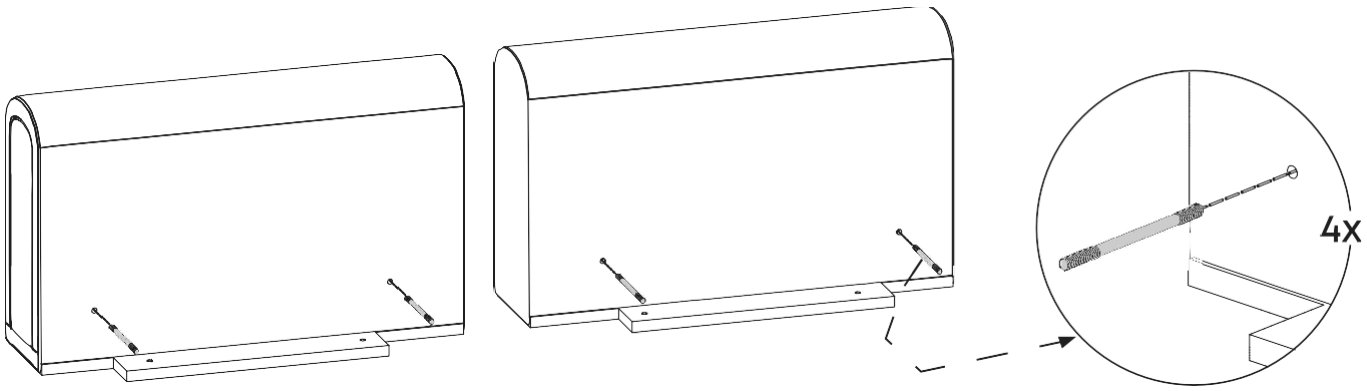
4X

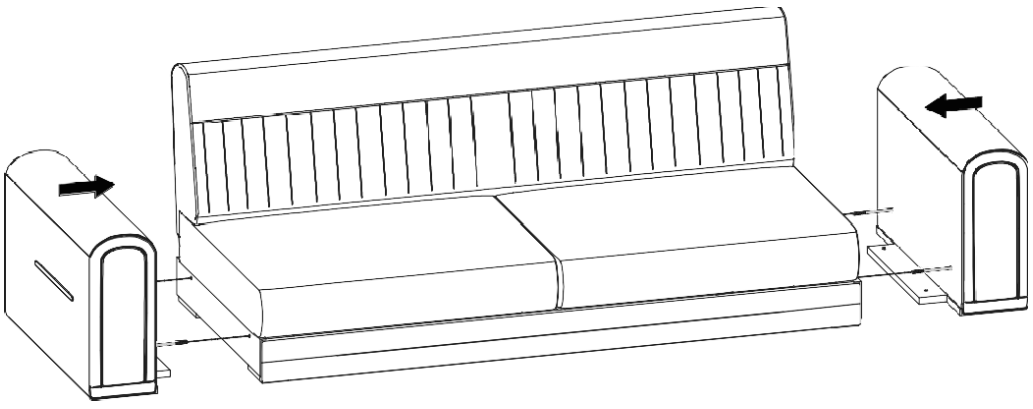

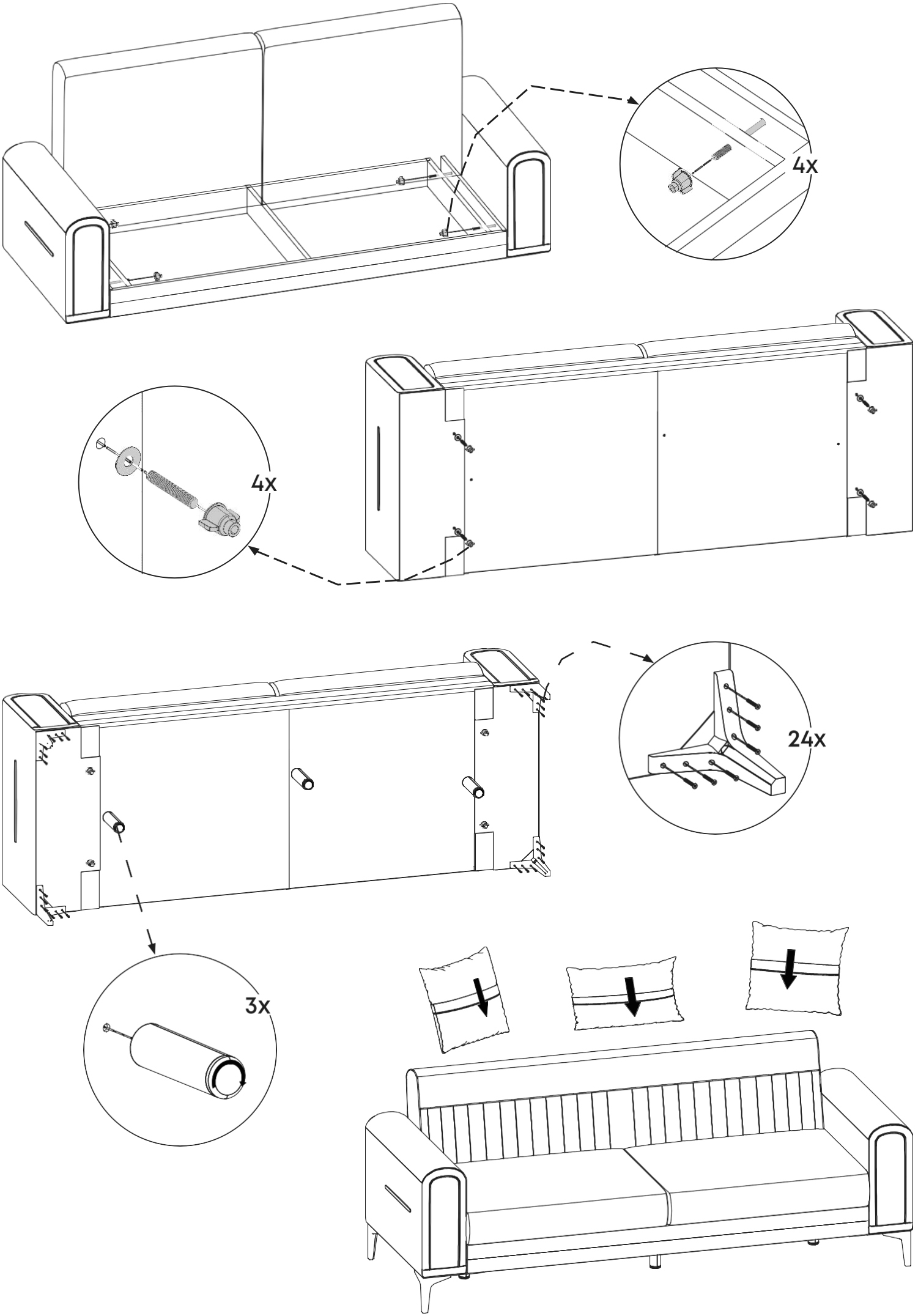
4x
4x
24x
3x