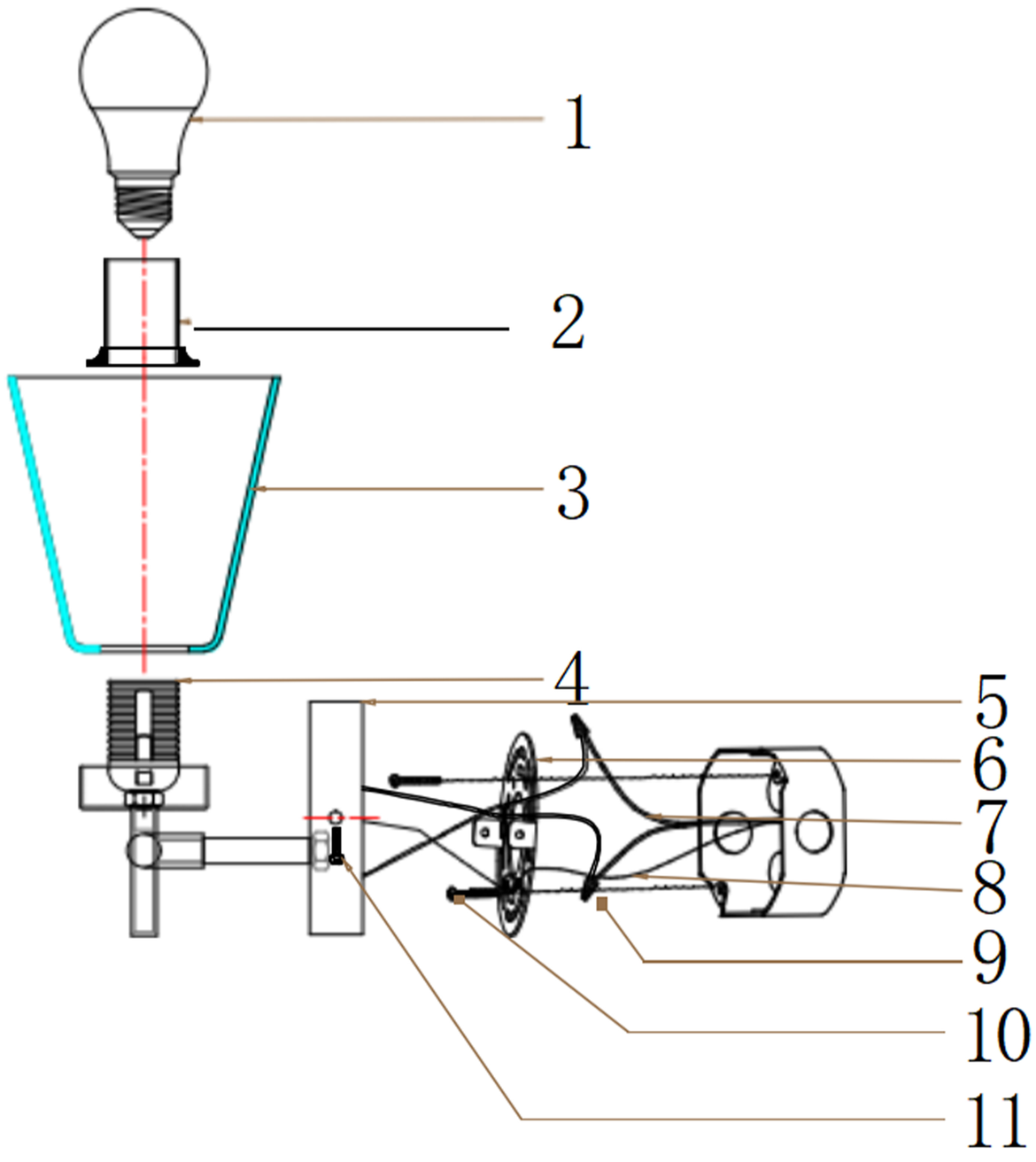

Installation Steps：

Step 1: Fix the mounting plate (6) to the junction box with screws (10).
Step 2: Connect the power cable (7) of the light body to the external power cable with the P3 wiring cap (9) and the ground cable (8) with the green screw.
Step 3: Fix the straight-sided basin (5) to the mounting plate(6) with screws (11).
Step 4: Clamp the glass (3) to the lamp head (4) with the lamp cup (2).
Step 5: Fit the bulb (not included) (1) to the lamp head (4)

Accessories：

Part 6：Mounting Plate*1	
Part 10：Mounting Screw*2	
Part 11：Mounting Screw*2	
Part 9：P3 Wiring cap*3	
Part 3：Glass Cover*1	
Part 2：Lamp cup*1	

Notice： This light fixture should be installed in accordance with all applicable, local installation codes, and by a person familiar with the construction and operation of it, as well as the hazards involved. Inspect items and contents carefully. If any damage or defect is found, do not install it.