Thank you for purchasing the **OTTOMAN!**

Before you start, here is some helpful advice:

1. We suggest you spend a short time reading through this leaflet and then follow the simple step by step instructions.
2. Owing to the size and weight of the ottoman, we recommend that it is assembled by two adults, on a carpeted or padded area, in the room that it is intended for. Approximate assembly time: 30 minutes.
3. Please do not use any tools other than those provided or recommended in these instructions.
4. Please do not throw away any of the packaging or instructions until you have checked all the components and hardware and the furniture is fully assembled.
5. Assemble all components loosely until advised to tighten. Depending on use, it may be necessary to tighten the components from time to time, so please save the tools that have been provided.
6. Please keep all pieces out of reach of small children.

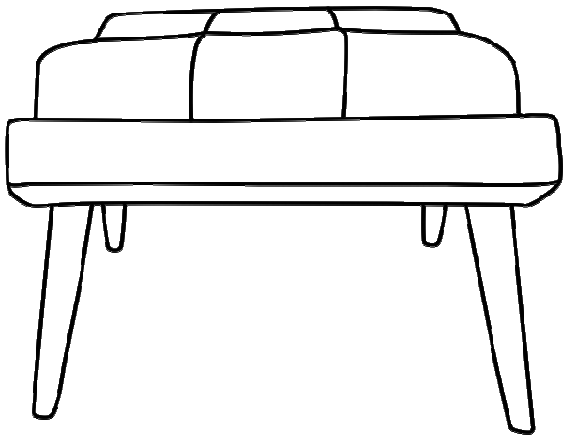

Hardware:

A1	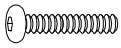	Bolt*55mm	x 8
A2	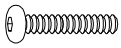	Bolt*60mm	x 4
B		Spring Washer	x 12
C		Flat Washer	x 12
D		Allen Wrench	x 1

Component:

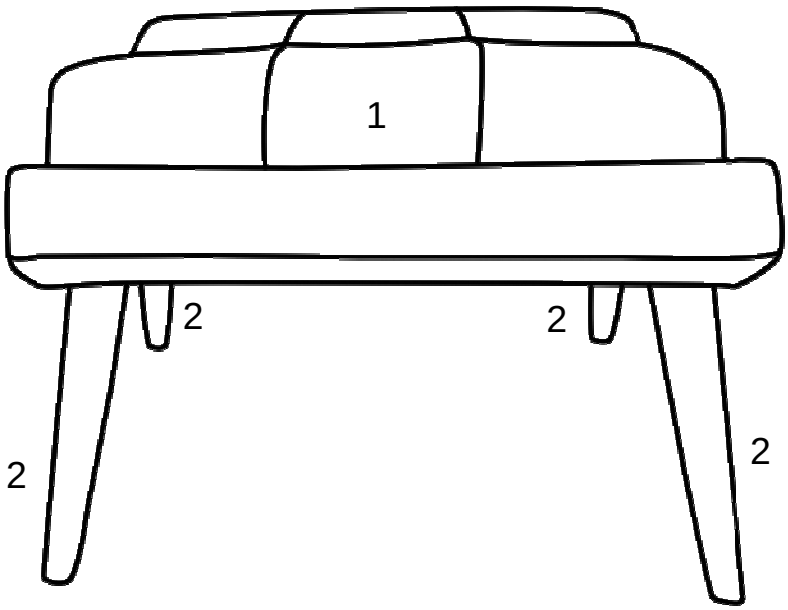

1	Ottoman Body	x1	2	Leg	x4

STEP 1:

Please put the Ottoman **Body (1)** upside down on a carpeted or padded area by two adults and make the corners fully visible. Please open the Zipper in the bottom of Ottoman **Body (1)** and take out 4 pieces of **Leg (2)** and hardware from the Legs package.

Attach 1 piece of **Leg (2)** to the bottom of Ottoman **Body (1)** by using 2 pieces of **Bolts (A1)** and 1 piece of **Bolt (A2)** with 3 pieces of **Spring Washer (B)** and 3 pieces of **Flat Washer (C)** as shown. Tighten the **Bolts (A1&A2)** by **Allen Wrench (D)** clockwise until secure.

Repeat the same steps for the other 3 piece of **Leg (2)**.

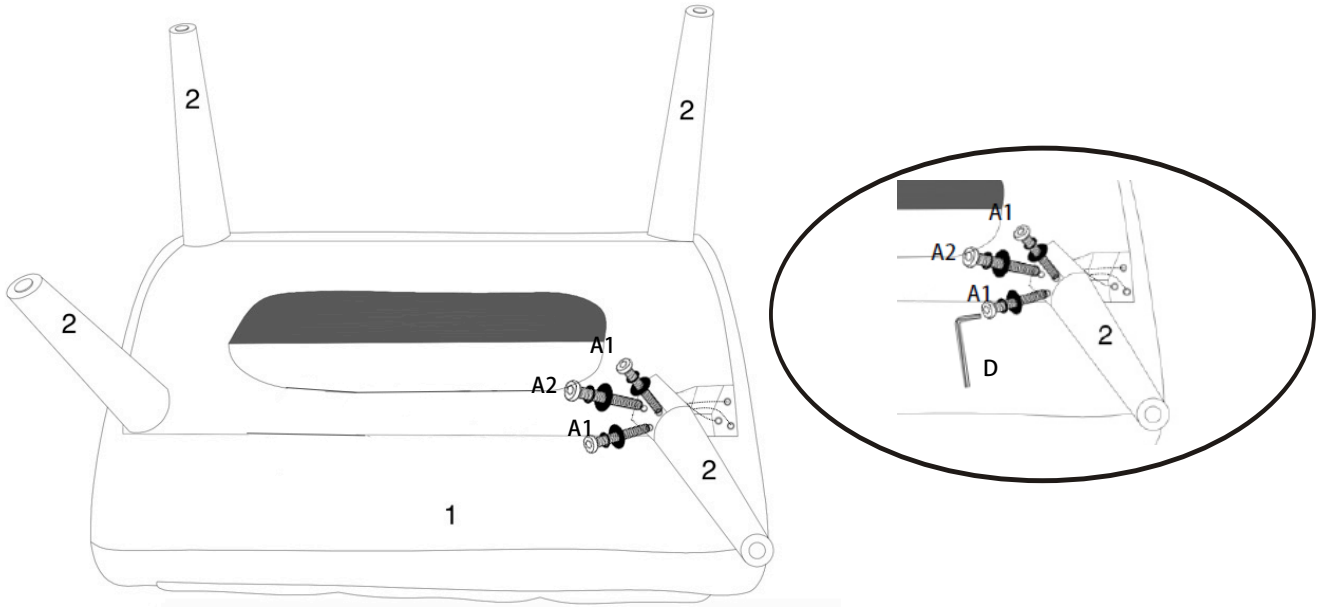

A1x8	A2x4	Bx12	Cx12	Dx1

Hardware & Tool required

STEP 2:

Carefully turn over the assembled **Ottoman Body (1)** as shown.

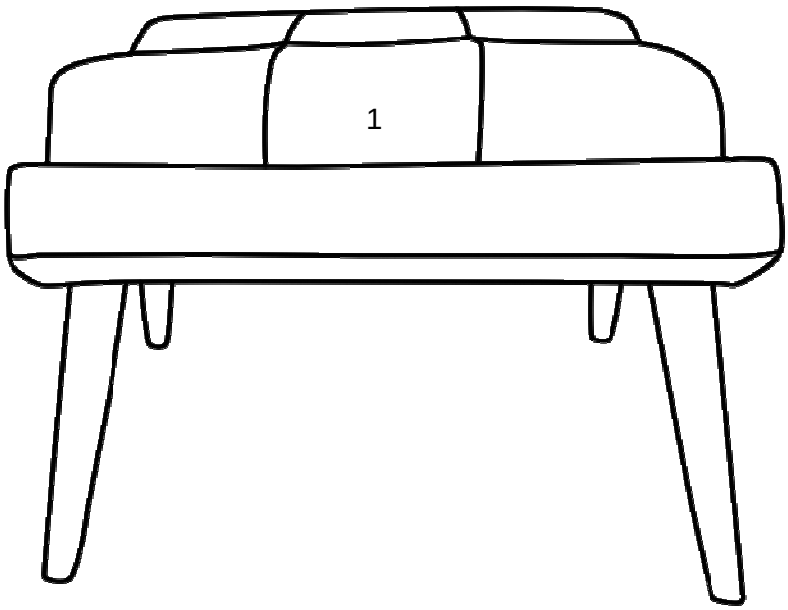

Assembly is complete. The ottoman is ready to enjoy now!