KIDS SLIDE

Instruction manual

ML003

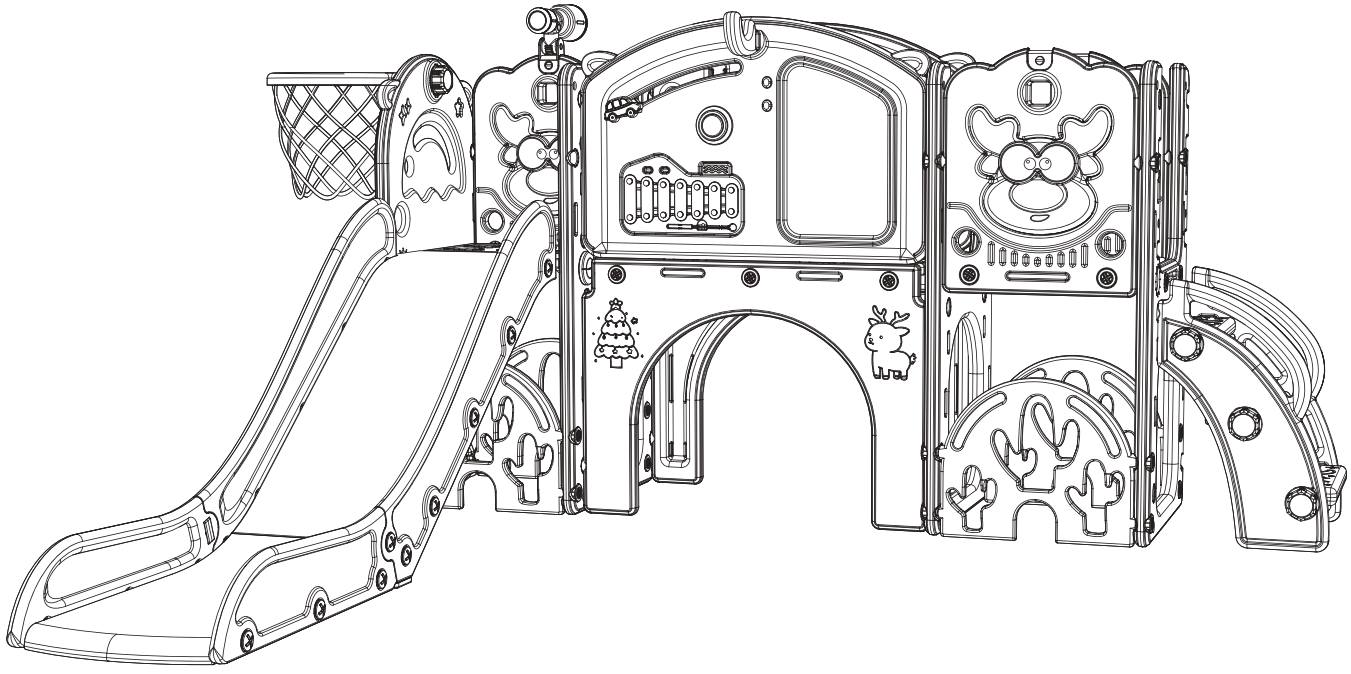

E-mail Service : toddlerslide@gmail.com

Please read and keep the manual properly, it contains important information.

MAINTENANCE INSTRUCTIONS

1. Check the product regularly to prevent loose and broken components.
2. Use mild soap and water for daily cleaning.
3. The following examines are required at the beginning of each season (twice a month)

(1)Check if any parts are missing or broken.

(2)Check if all the connection parts are tight.

⚠ WARNING

1.CHOKING HAZARD-Small parts. Sharp points.Only for adults assemble it and the product should be used under the supervision of an adult.

2.Children on this product should not wear scarf, gloves, cloak or any clothes with long strip.

3.Children on this product should not wear necklace or hang anything around the neck.

4. MAKE SURE the surface of the product is dry and free of foreign objects before use Stay away from fire

5. MAKE SURE all the connection parts are tightly assembled before allowing children to play on it.

6.DO NOT cut, heat or change the shape of the product.

7.DO NOT use jump rope, clothes line, etc. to hang items not specially designed for this product.

8.DO NOT place the product in direct sunlight to reduce the risk of sunburn.

9.DO NOT use the product in an unintended way.

10.DO NOT use the product when it it wet or in a snow day.

11.Falling to a hard ground like concrete floor may cause severe injury or even death.Close supervision of an adult is required during use.

12.Stop using the product when the temperature is below 32℉ (0℃), because the plastic material may get more fragile and easier to broken.

INFORMATION BEFORE ASSEMBLING

Check if following spare parts are in the box:

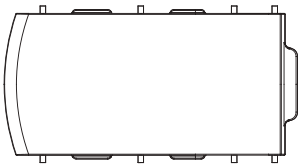

① x1

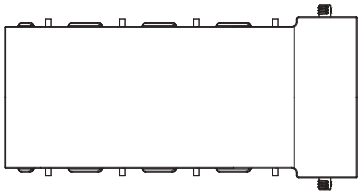

② x1

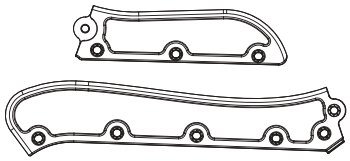

③ x2 pair

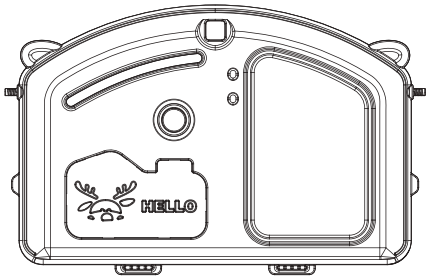

④ x2

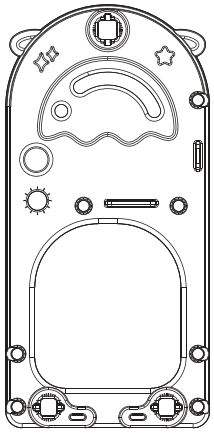

⑤ x1

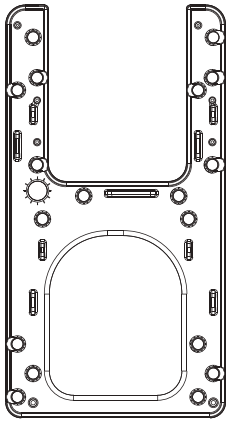

⑥ x3

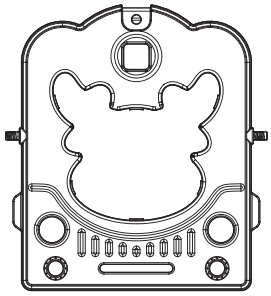

⑦ x3

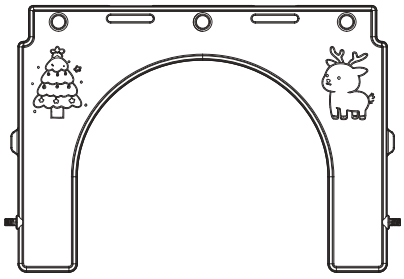

⑧ x2

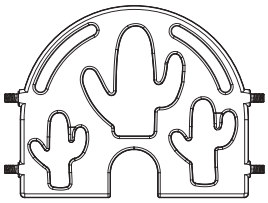

⑨ x4

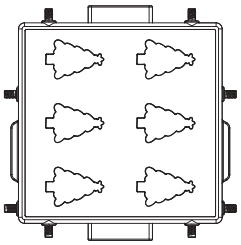

⑩ x1

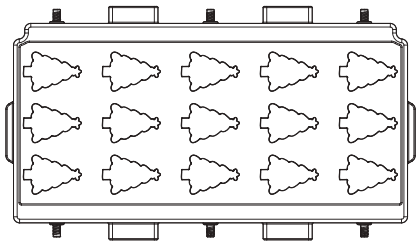

⑪ x1

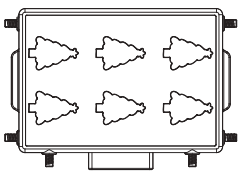

⑫ x1

INFORMATION BEFORE ASSEMBLING

Check if following spare parts are in the box:

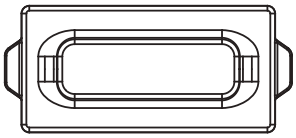

13 x2



14 x3

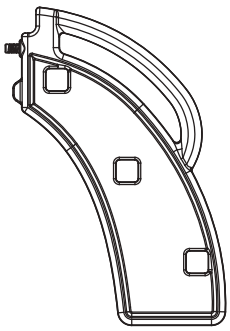

15 x2

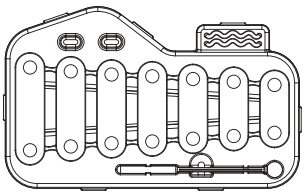

16 x1

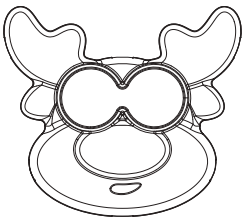

17 x3

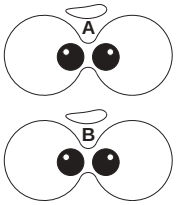

18 x3

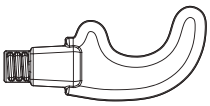

19 x1

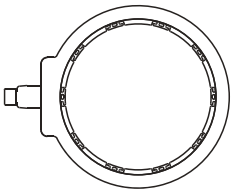

20 x1



21 x1

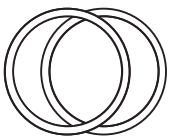

22 x4

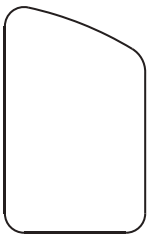

23 x1

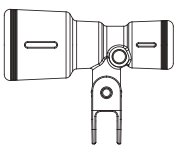

24 x1



25 x1

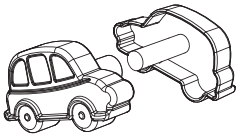

26 x2 pair

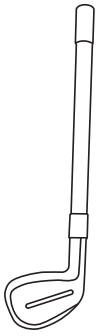

27 x1

INFORMATION BEFORE ASSEMBLING

Check if following spare parts are in the box:

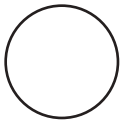

28 x2 (Ball)

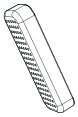

29 x2



30 x52



31 x18

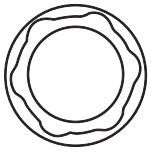

32 x8

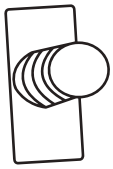

33 x2

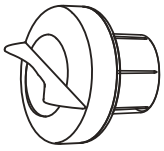

34 x2

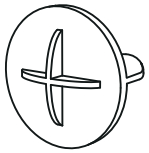

35 x1

⚠ HOW TO ASSEMBLE SCREWS

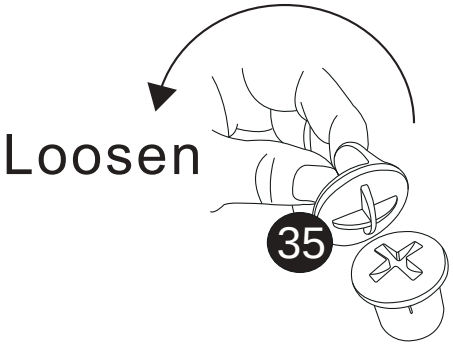

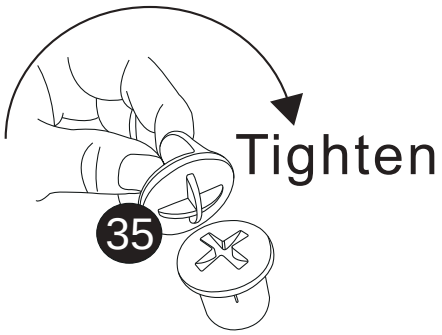

ASSEMBLING

STEP 1

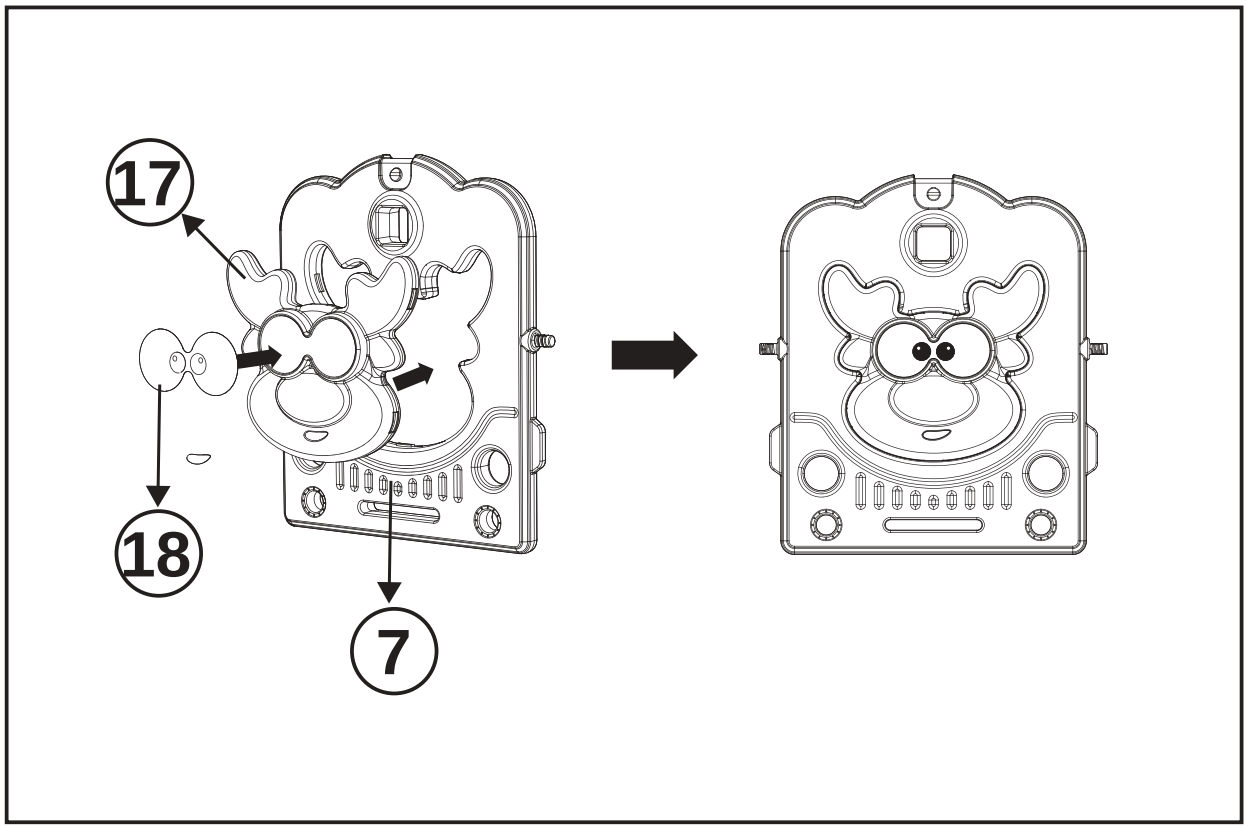

STEP 2

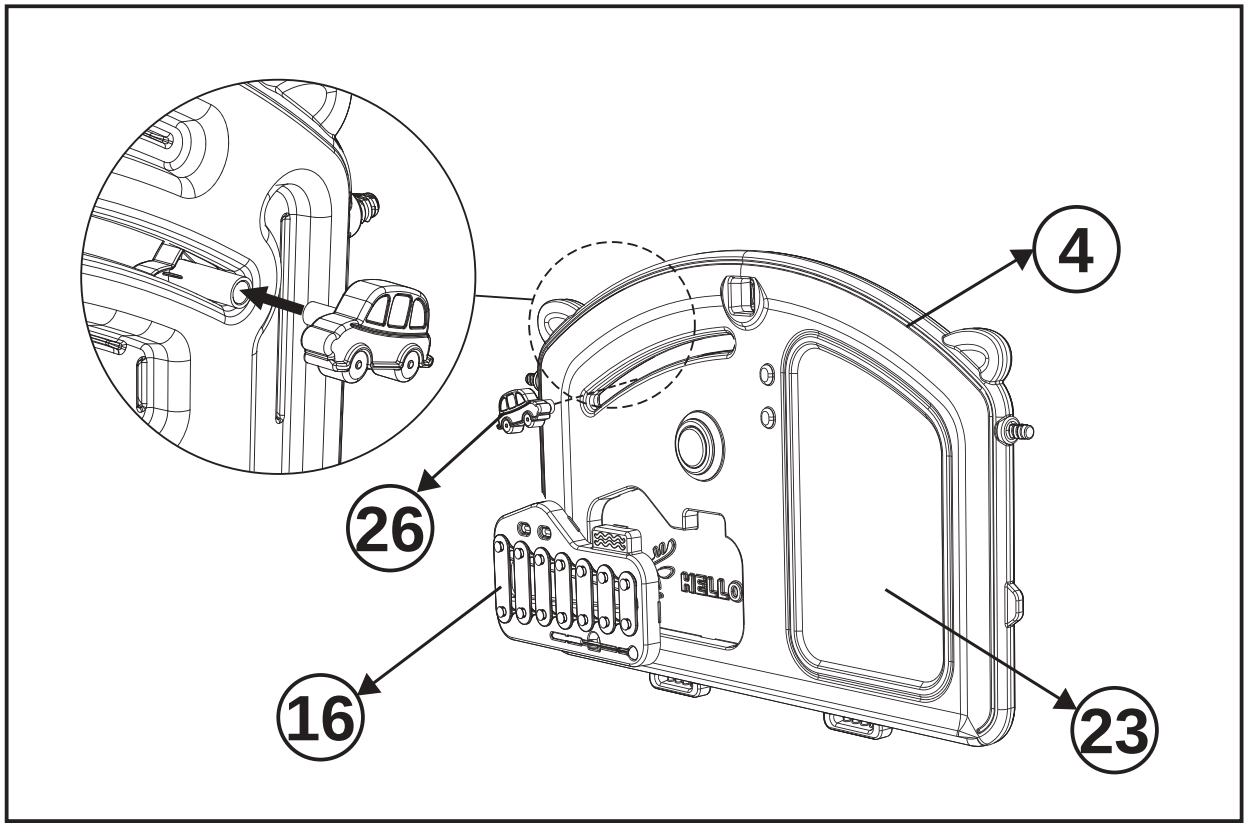

ASSEMBLING

STEP 3

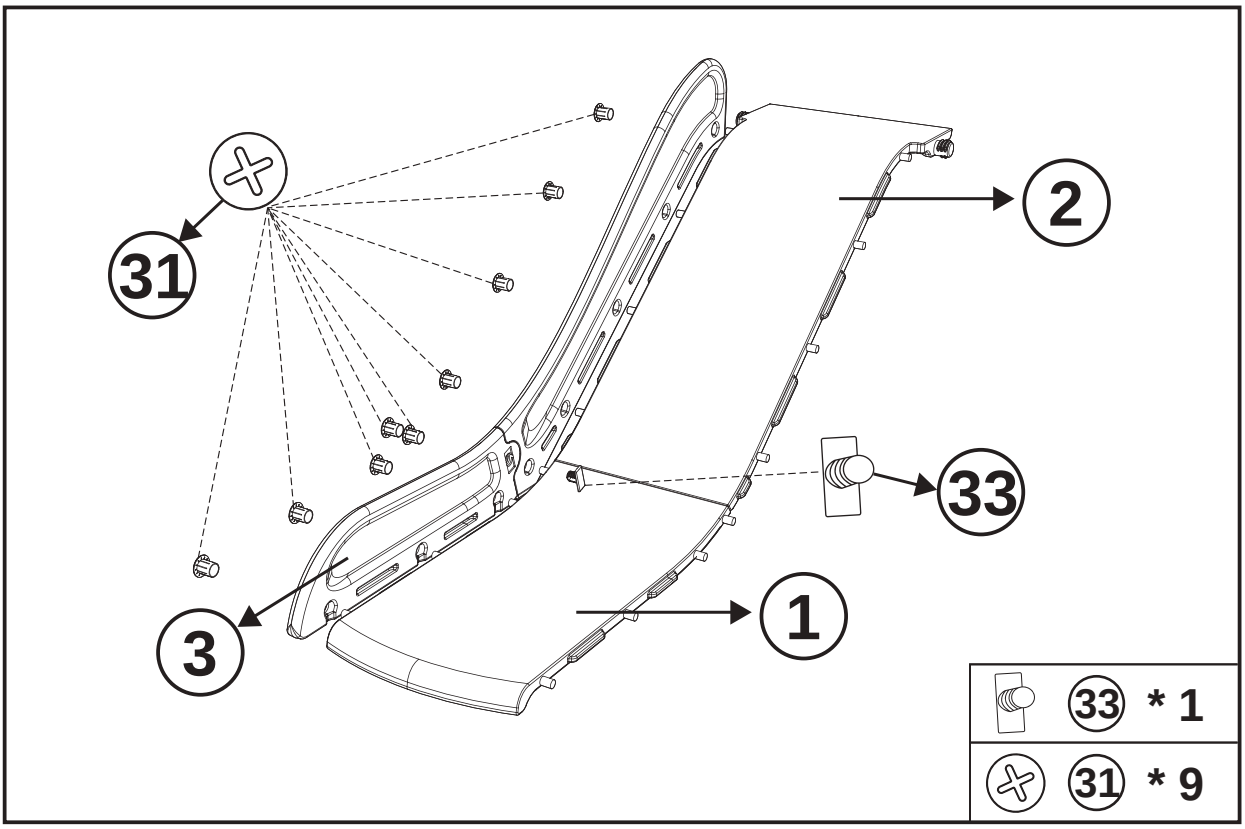

STEP 4

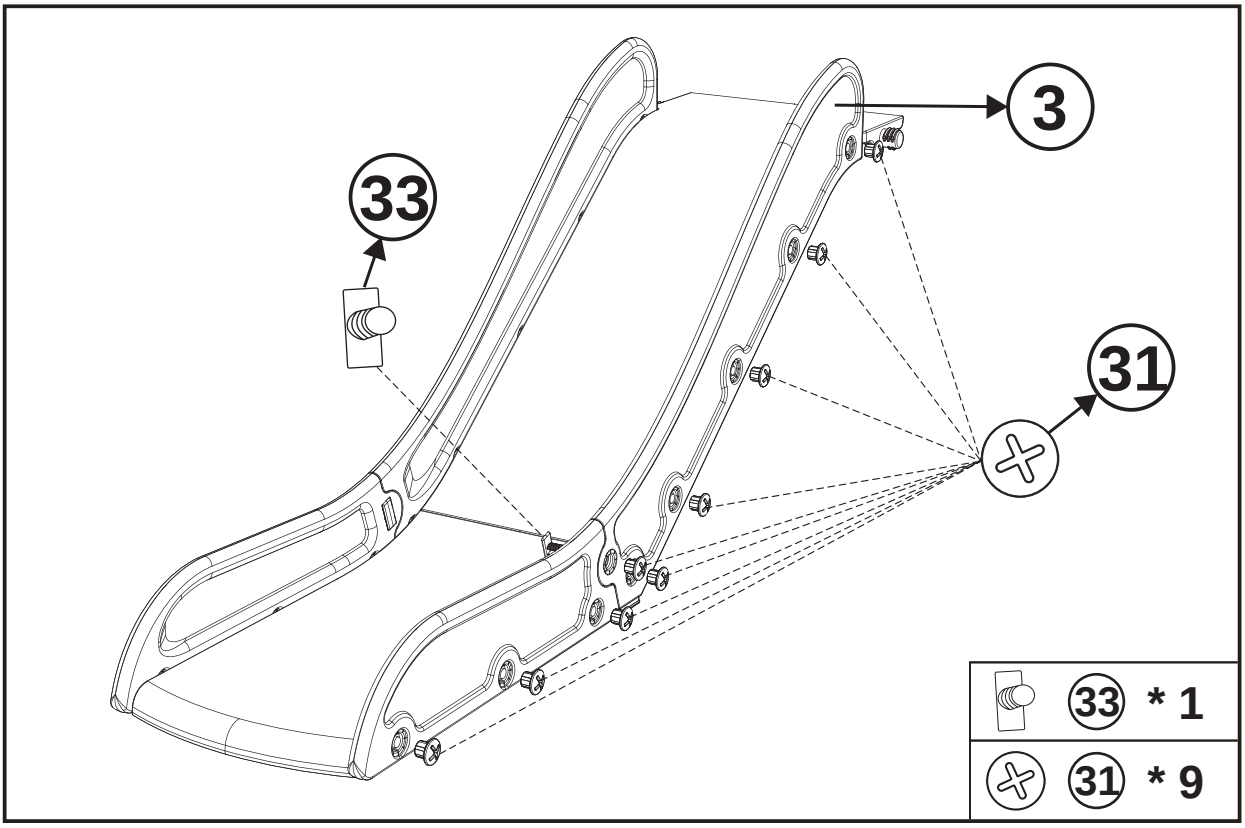

ASSEMBLING

STEP 5

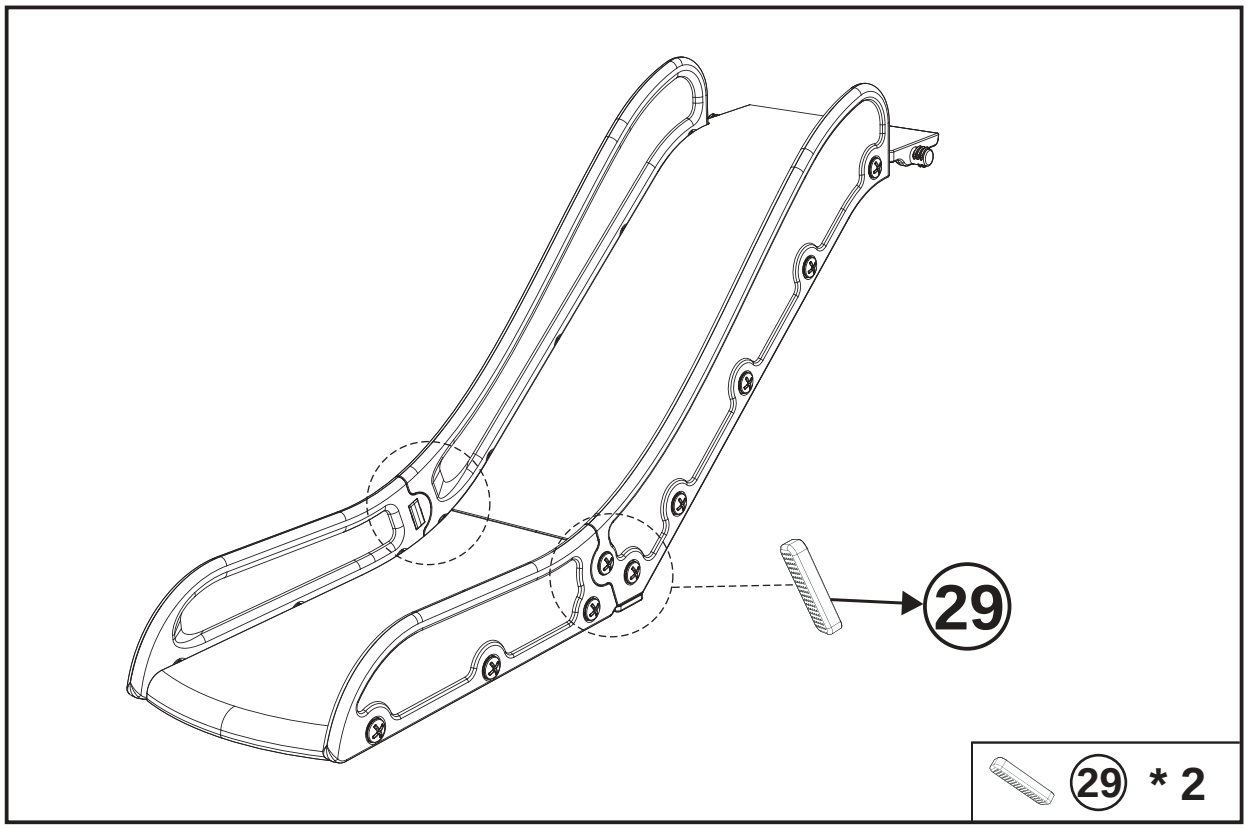

STEP 6

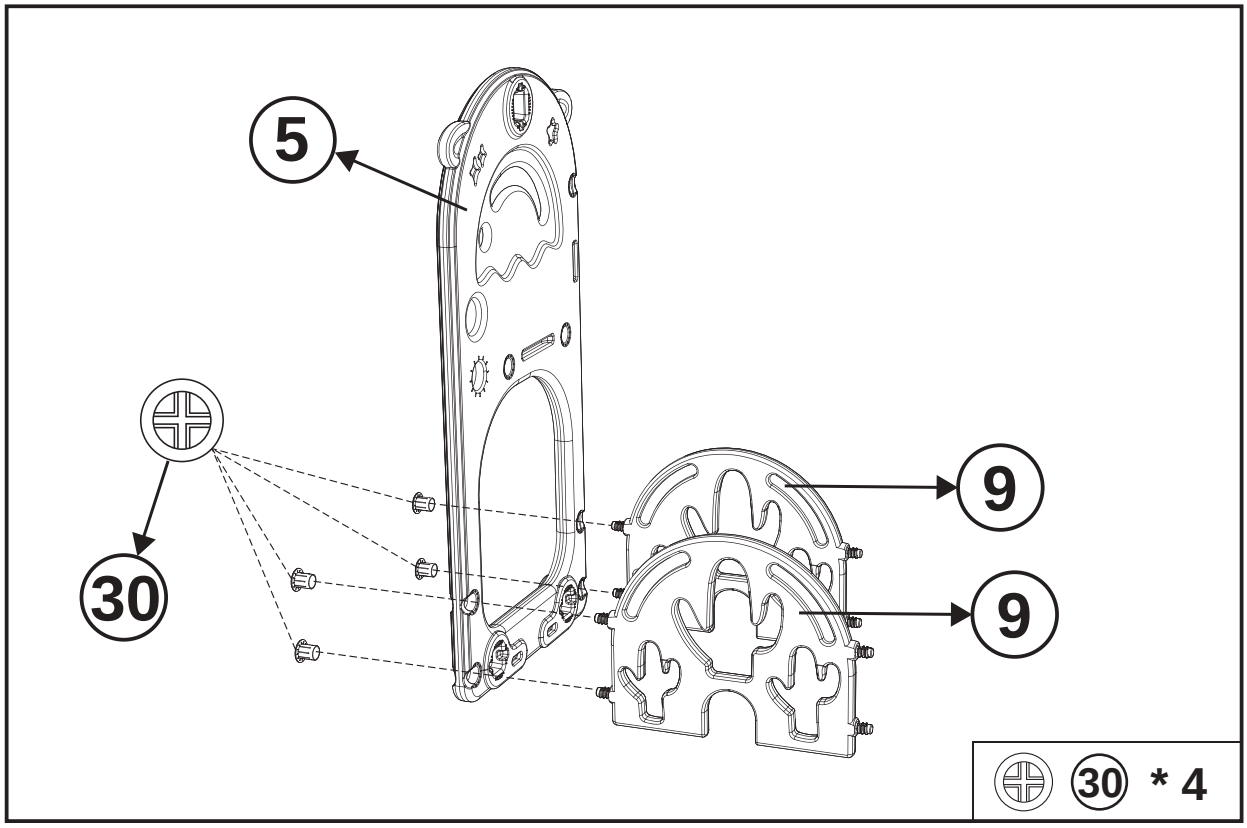

ASSEMBLING

STEP 7

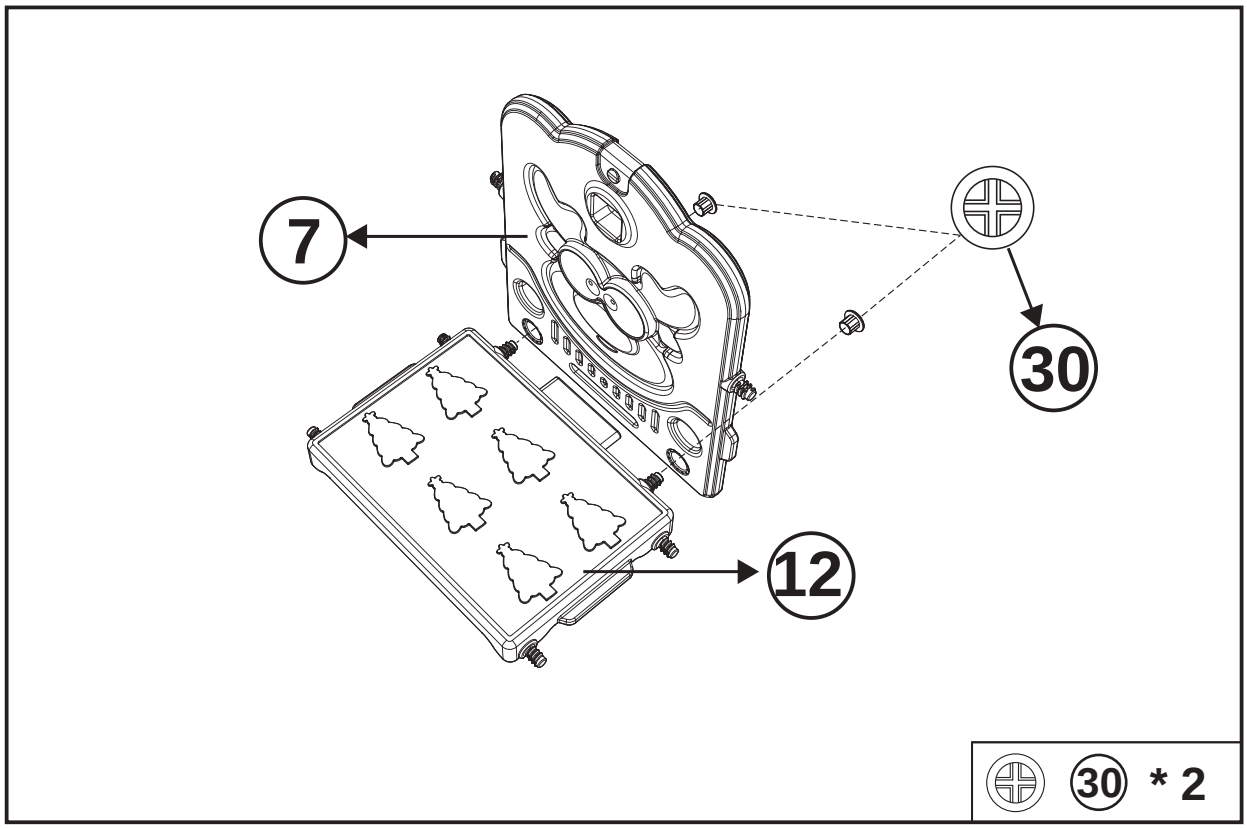

STEP 8

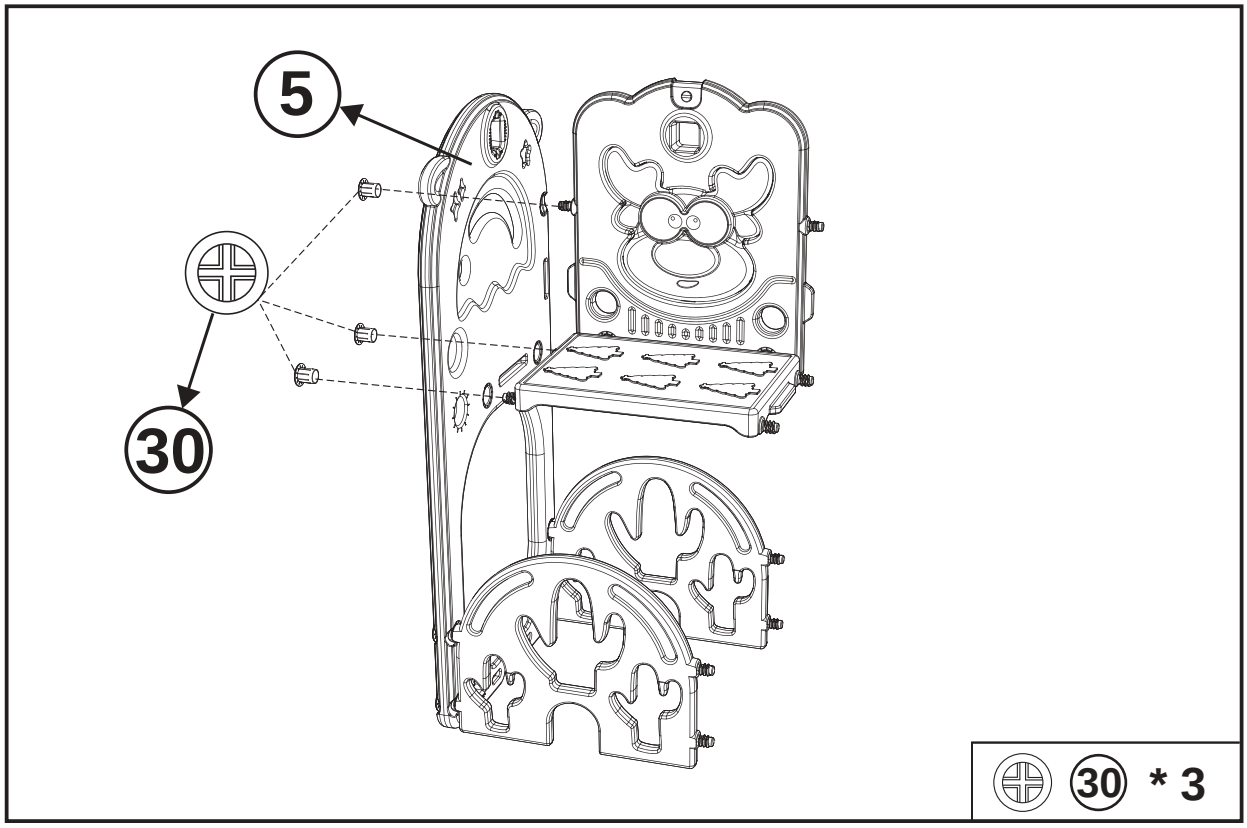

ASSEMBLING

STEP 9

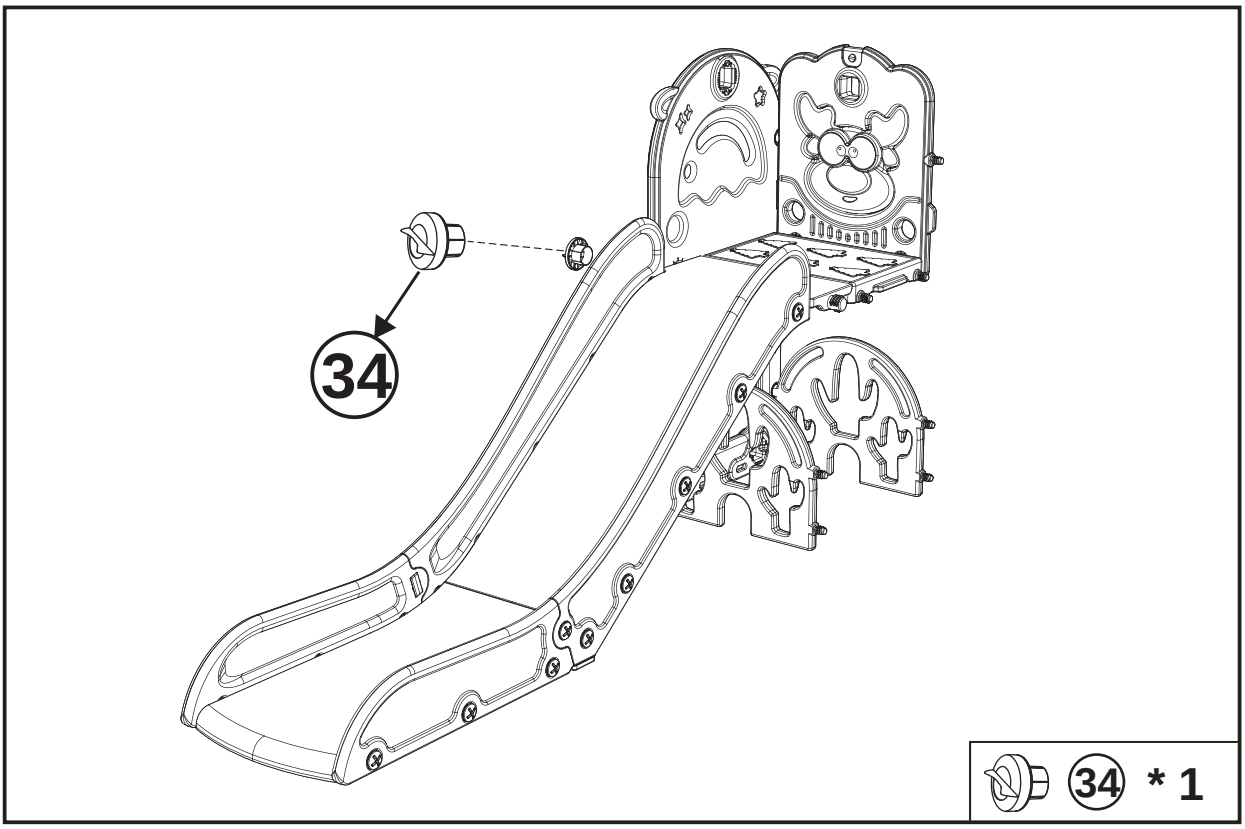

STEP 10

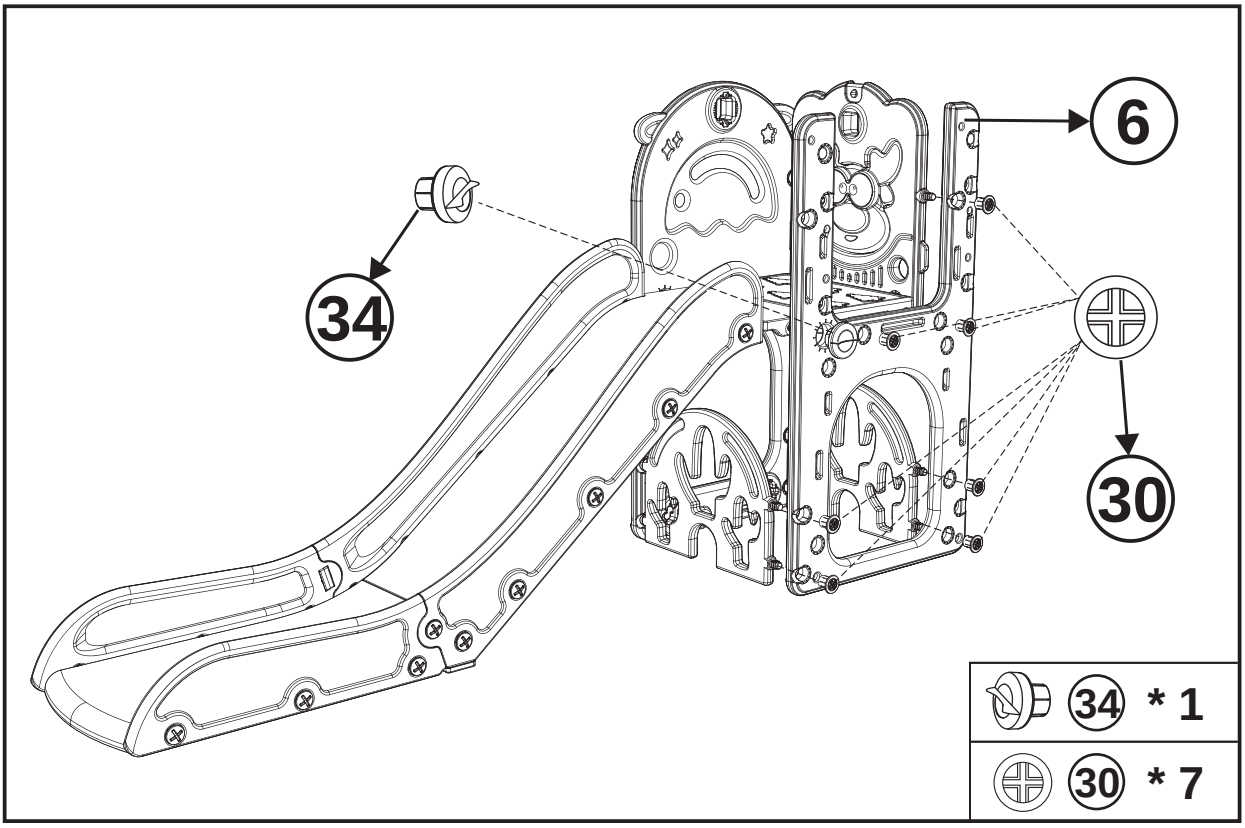

ASSEMBLING

STEP 11

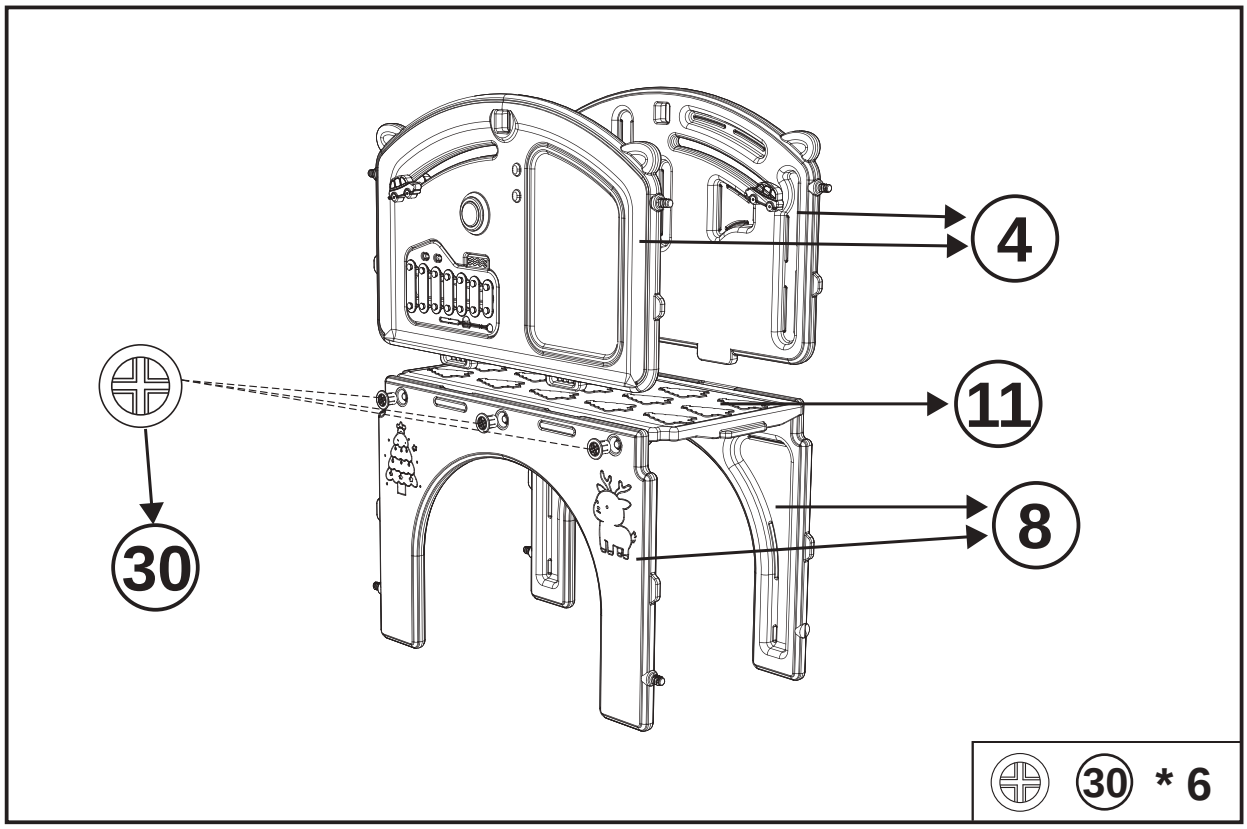

STEP 12

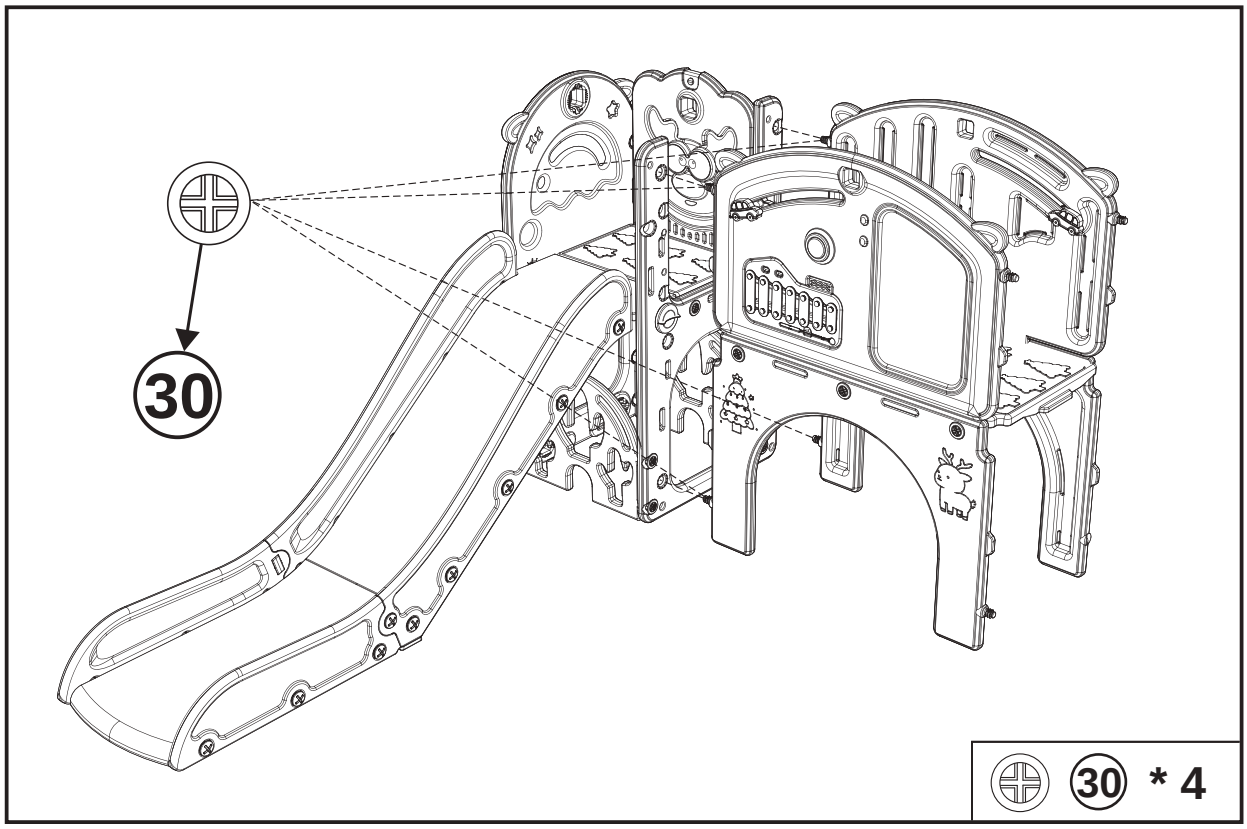

ASSEMBLING

STEP 13

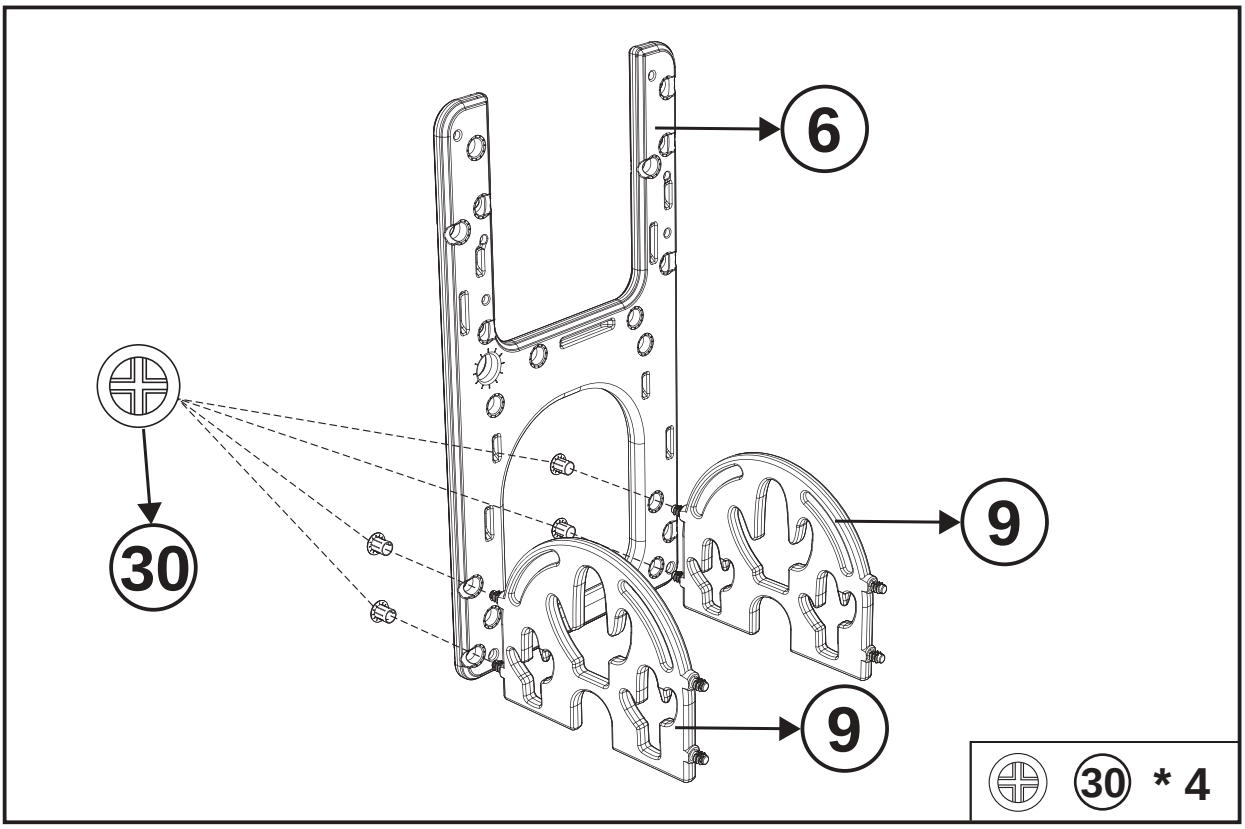

STEP 14

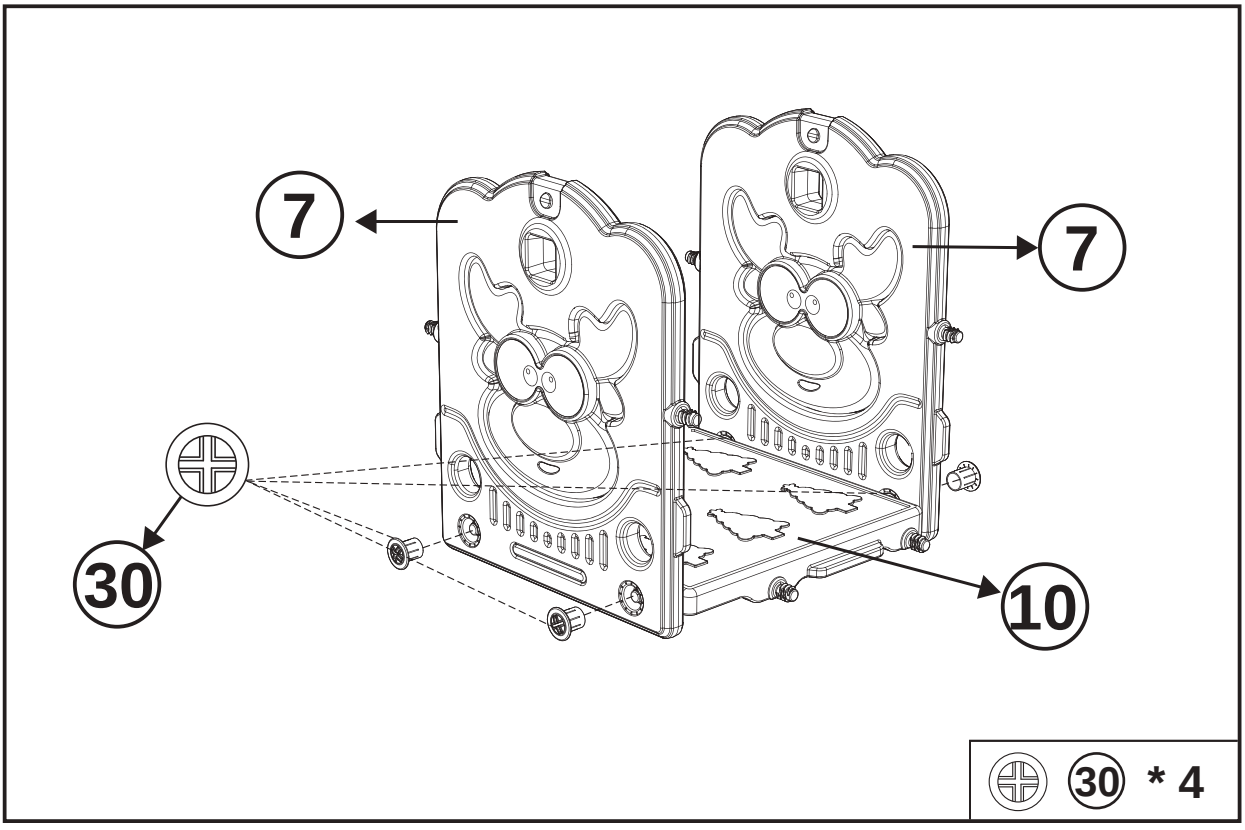

ASSEMBLING

STEP 15

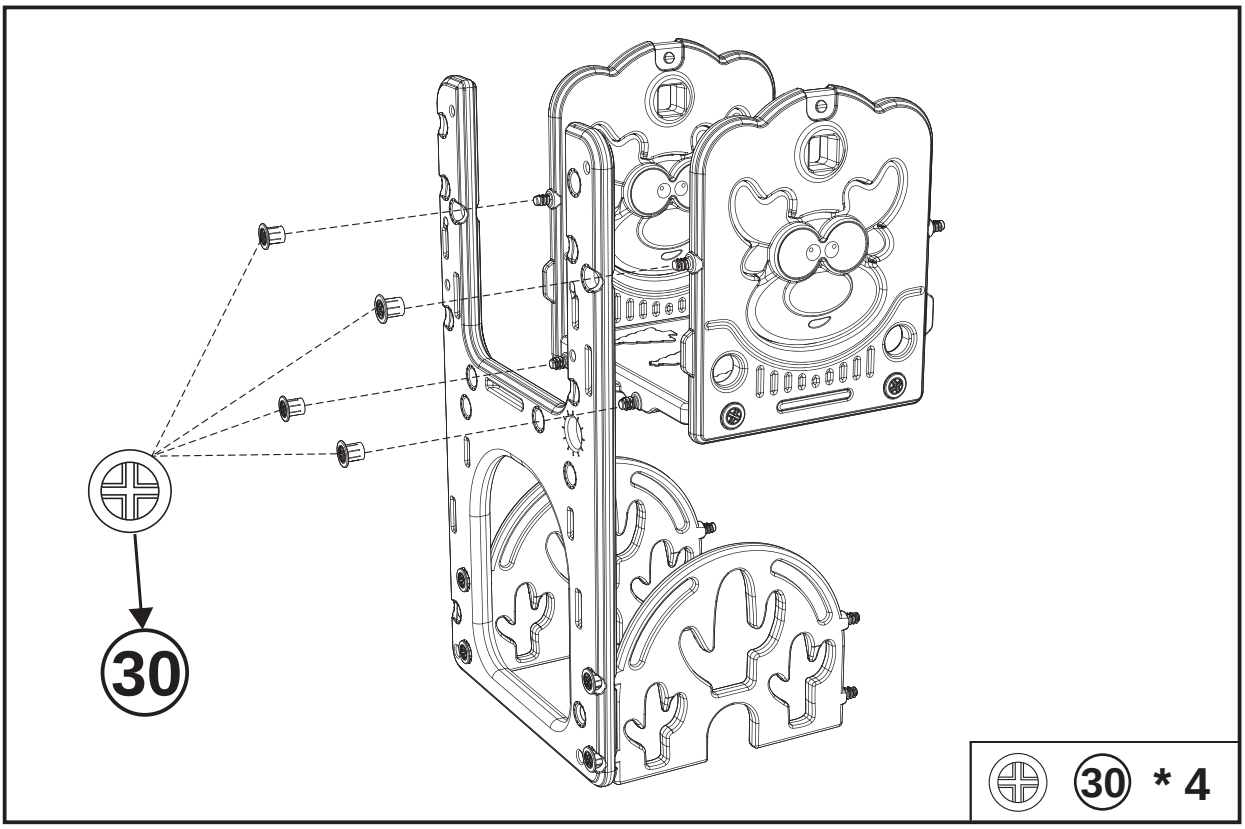

STEP 16

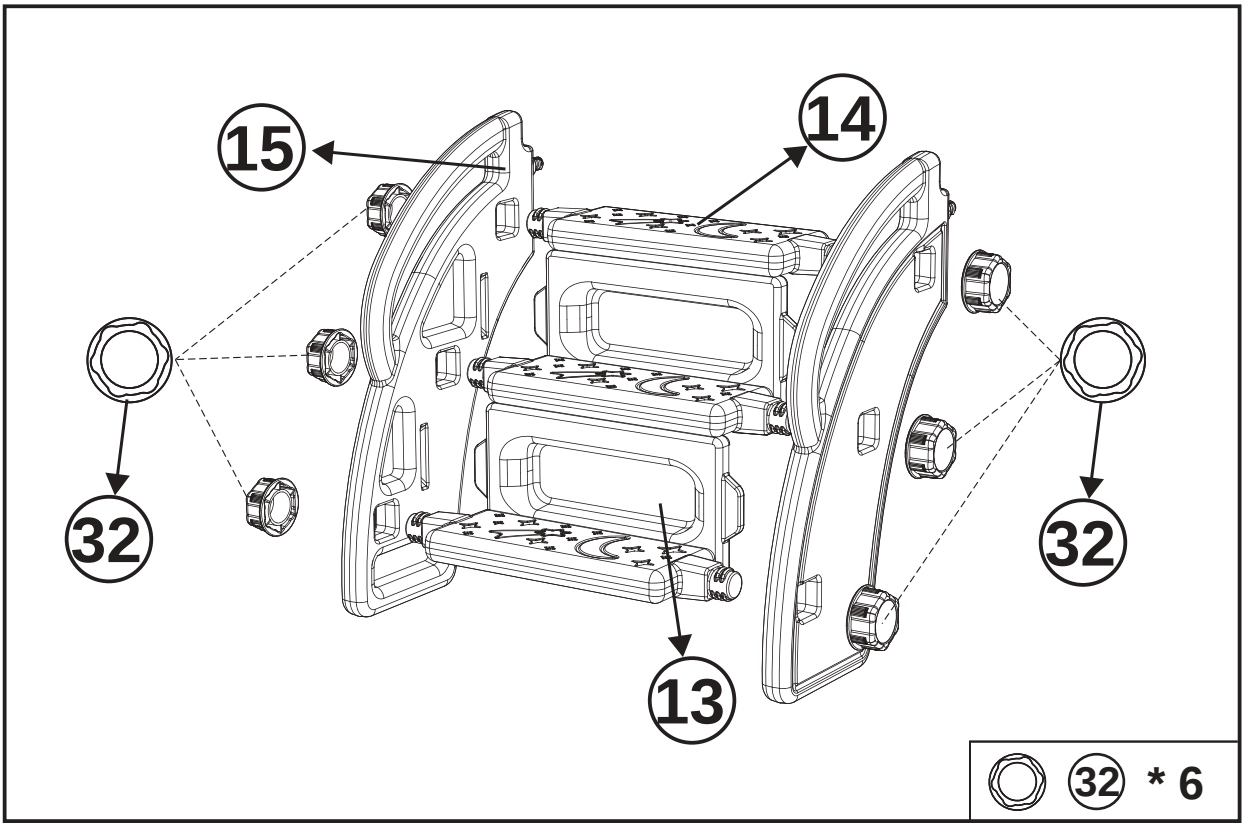

ASSEMBLING

STEP 17

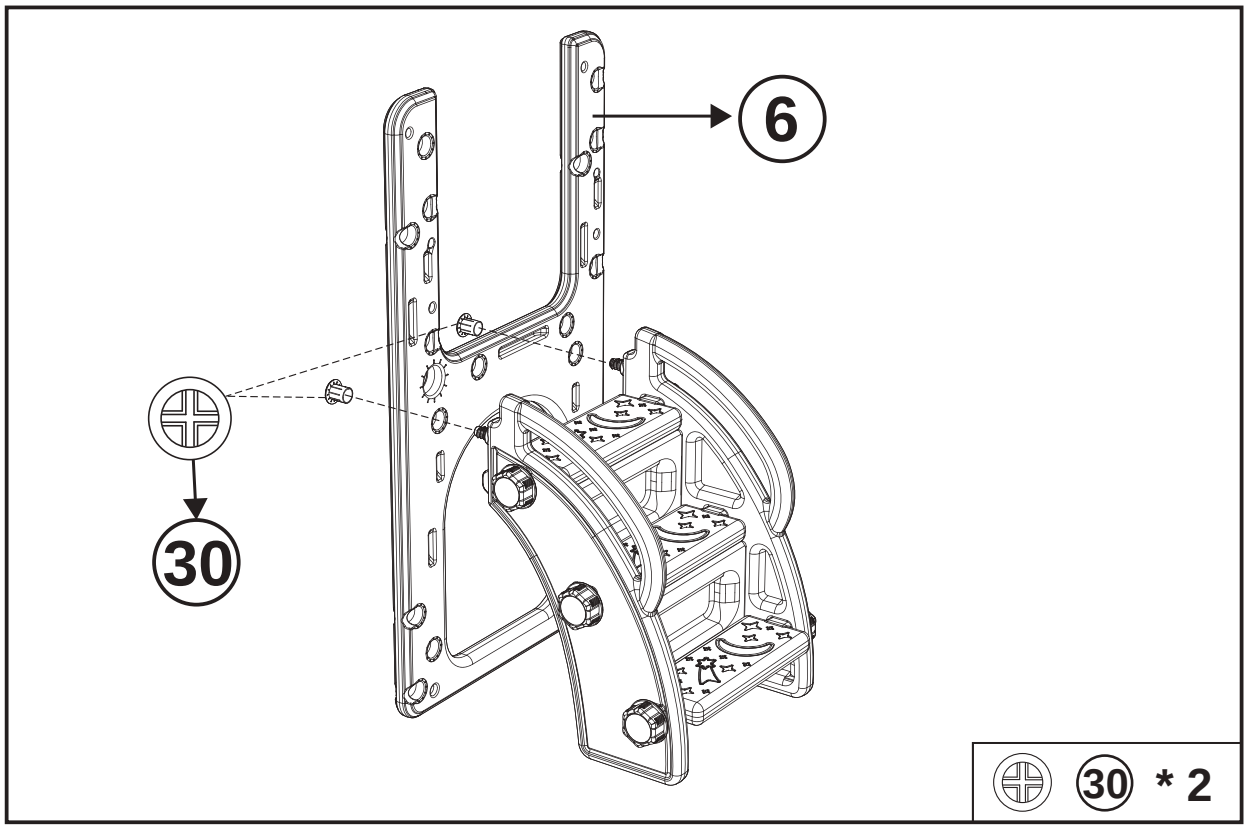

STEP 18

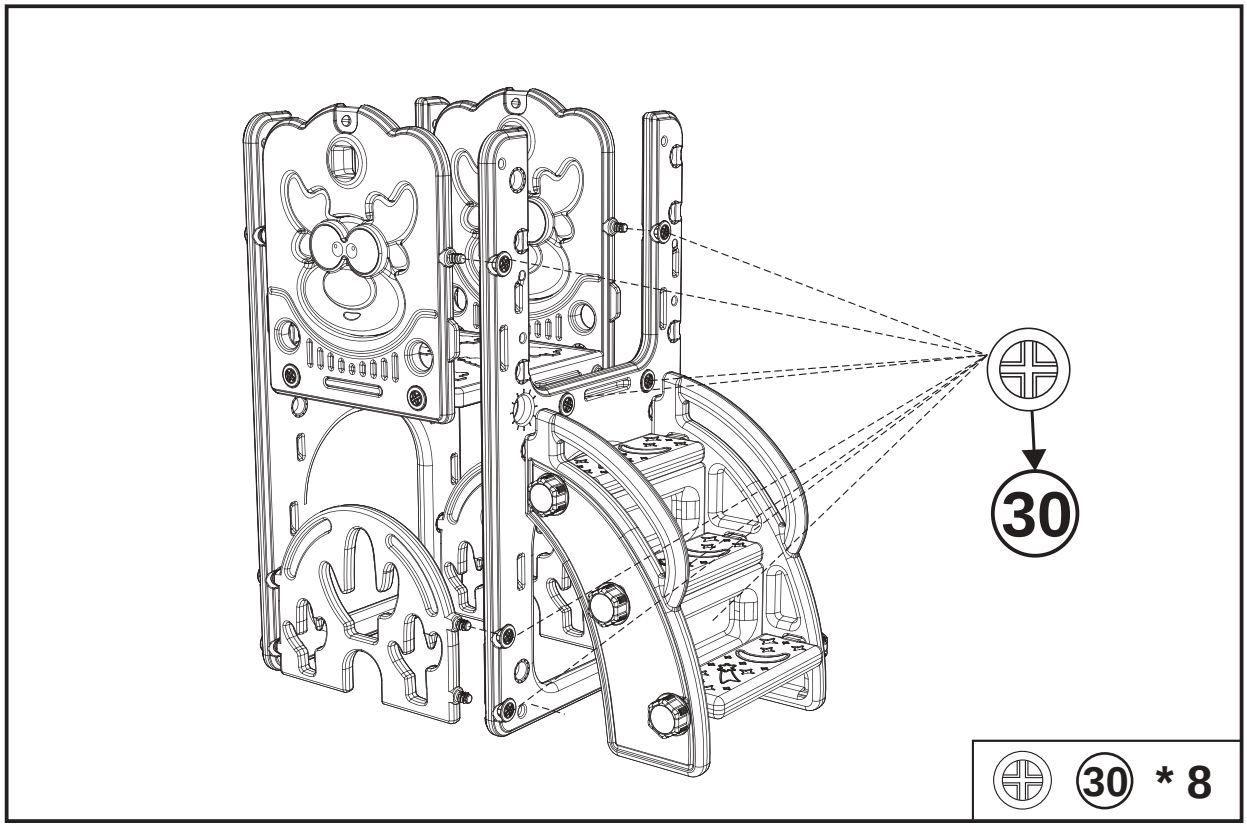

ASSEMBLING

STEP 19

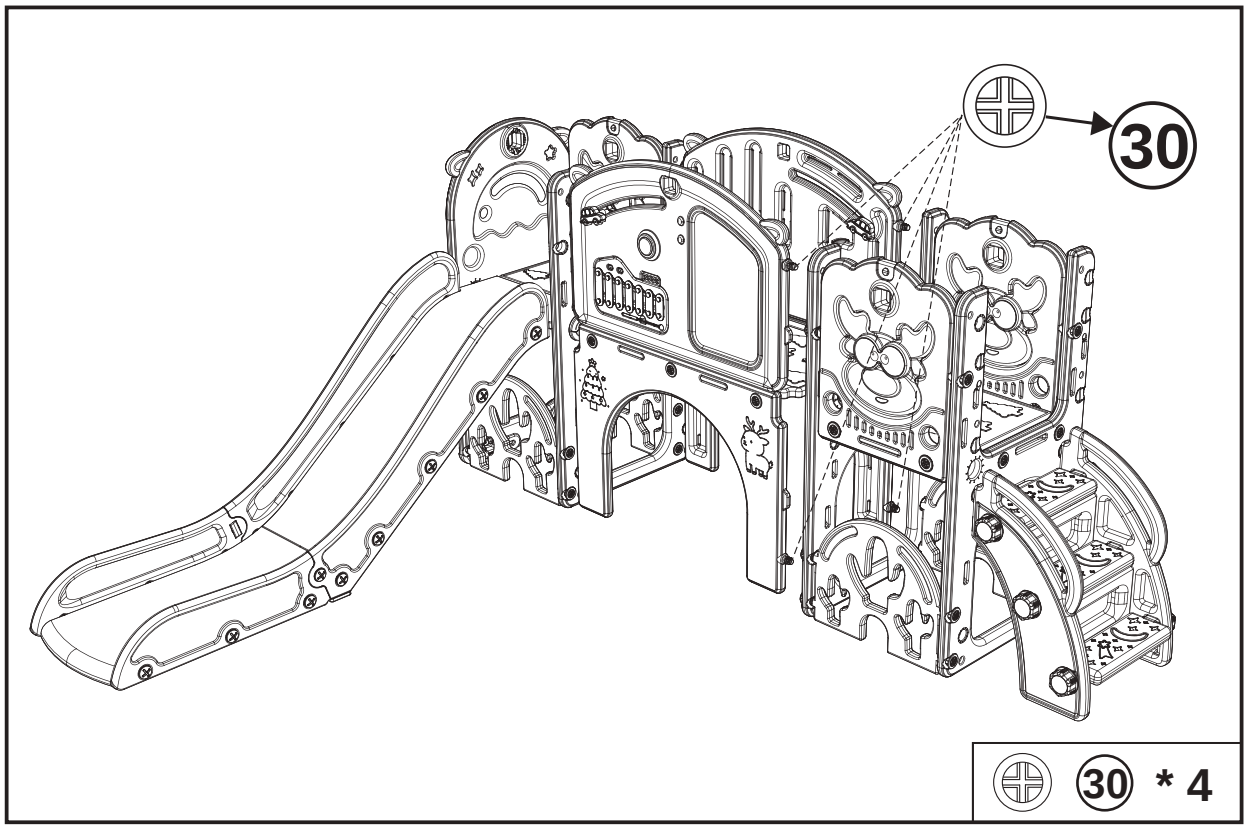

STEP 20

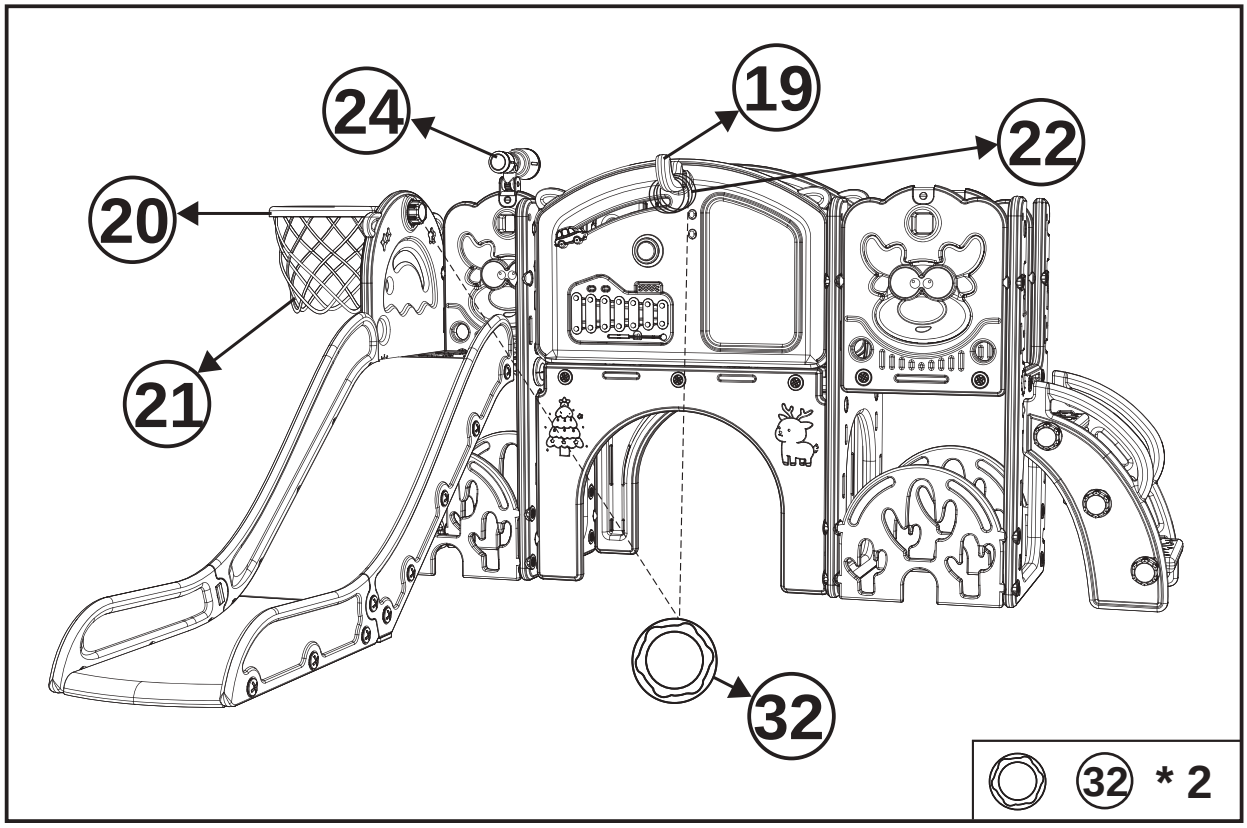

BASKETBALL NET INSTALLATION STEPS

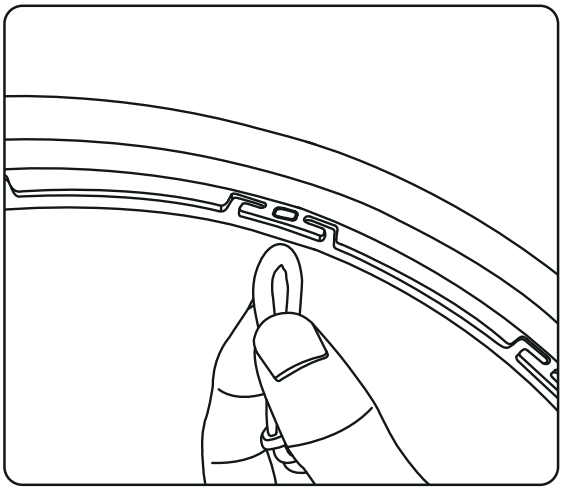

❶ Pick up one end of thebasketball net.

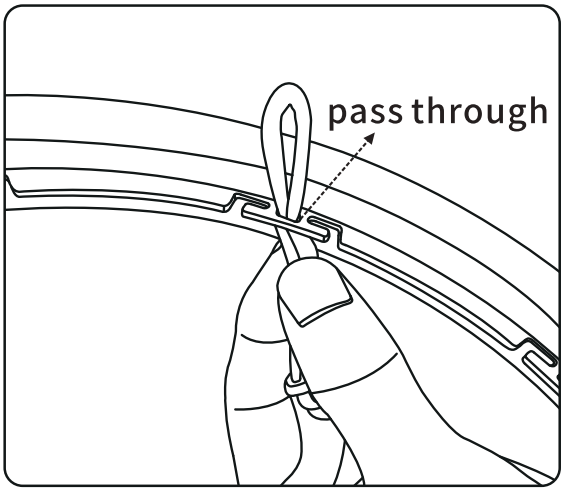

❷ Pass the basketball net through the middle of the basketball hoop hanging hole.

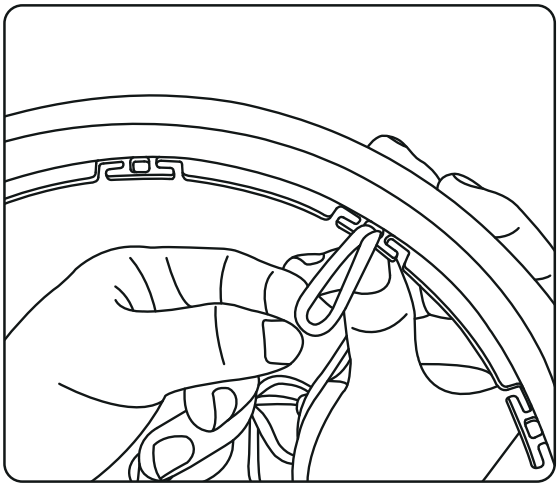

❸ Reserve enough passed parts to facilitate subsequent operations.

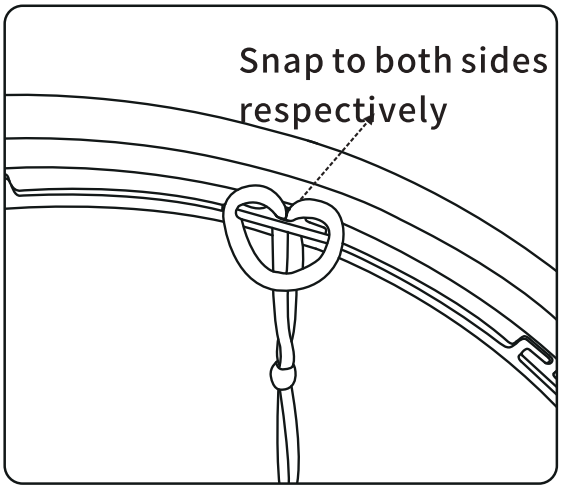

❹ Snap the basketball net into the grooves on both sides of the hanging hole.

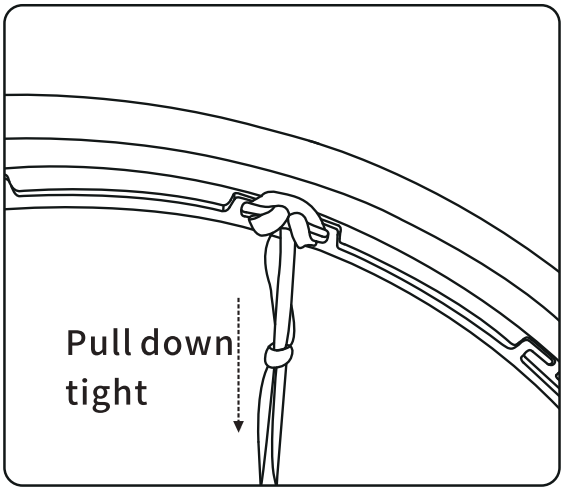

❺ Tighten the basketball net downwards so that the ropes passing through the hanging holes form a double knot.

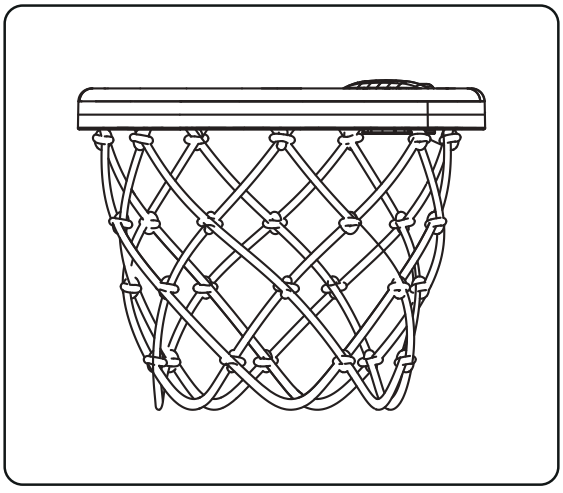

❻ Use the same method to hang basketball nets in other directions to the corresponding holes.

THANK YOU

Thank you for purchasing the kid slide from our store. If you experience any problem while using it, please feel free to contact us. We will solve the problem for you quickly and provide the best customer service!

E-mail Service : toddlerslide@gmail.com