ASSEMBLY INSTRUCTION

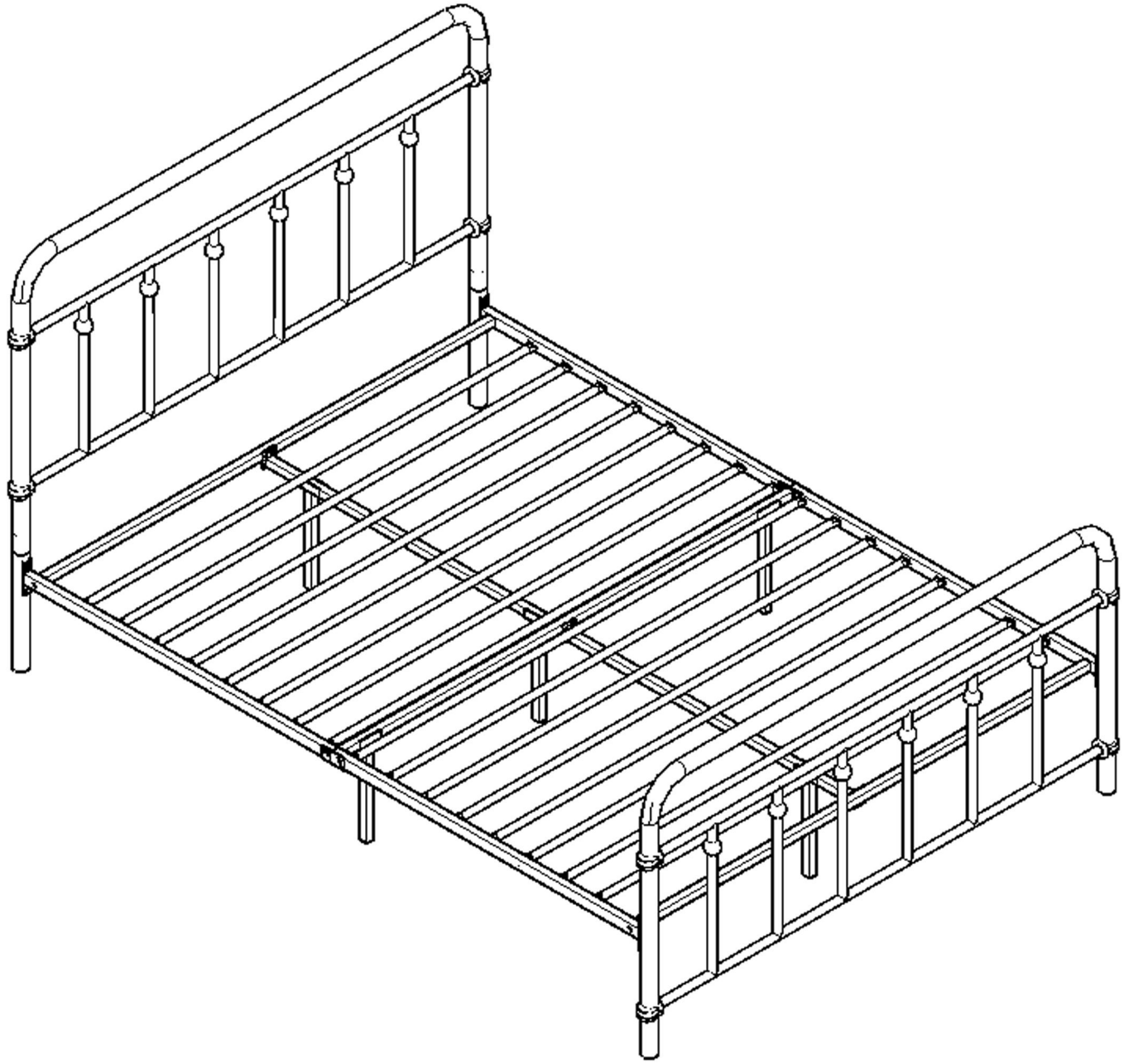

ASSEMBLY INSTRUCTION

PART LIST

A 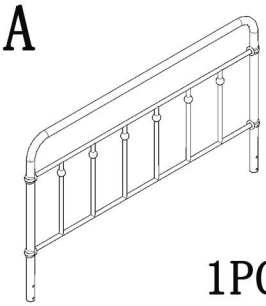 1PC	B 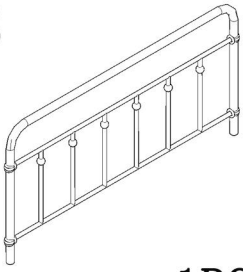 1PC	C 2PCS	D 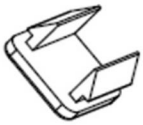 32PCS
E 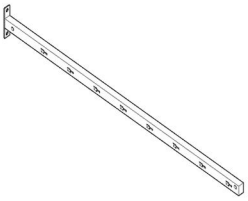 2PCS	F 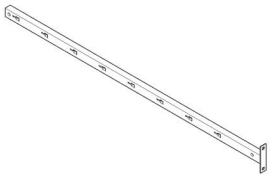 2PCS	G 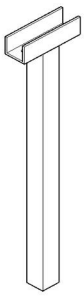 2PCS	H 16PCS
J 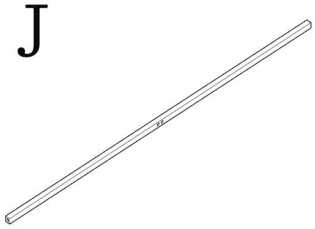 2PCS	K 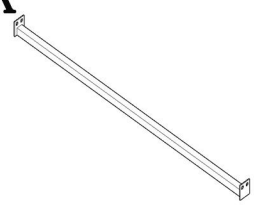 1PC	L 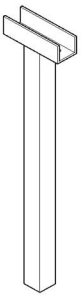 3PCS	M 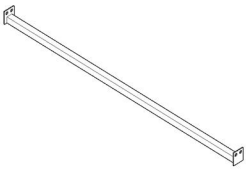 1PC
N 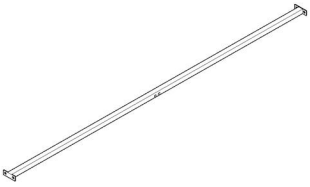 1PC	O 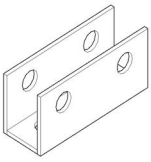 2PCS		

ASSEMBLY INSTRUCTION

HARDWARE LIST

① 1/4*16MM 30PCS	② 1/4*35MM 10PCS	③ 1/4 6PCS	④ 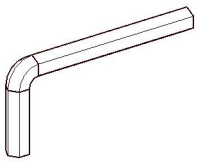 1/4 1PC
⑤ 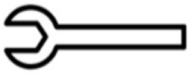 1/4 1PC			

Note: Please do not tighten all bolts until the bed is assembled completely

STEP 1

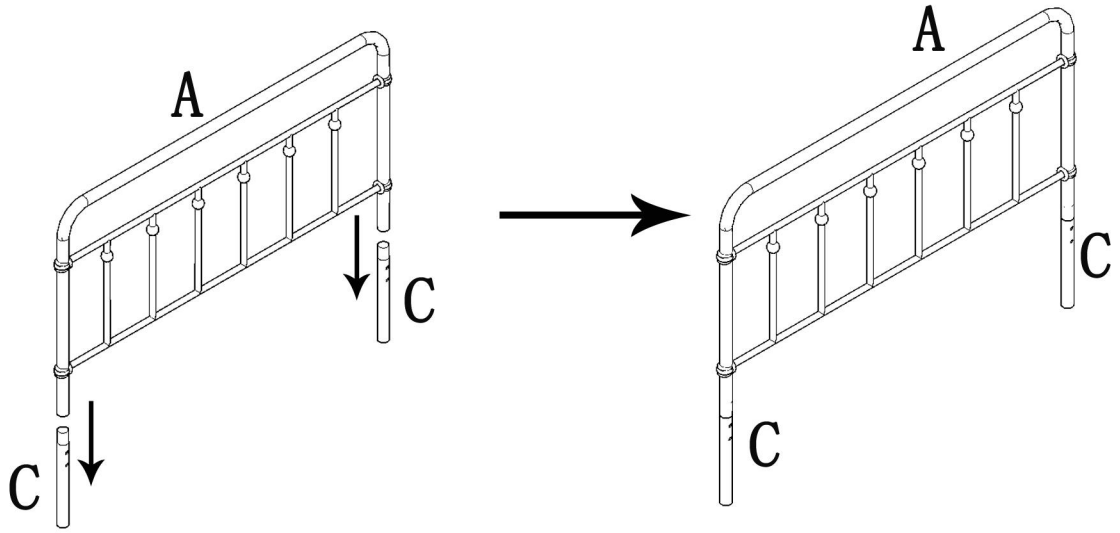

ASSEMBLY INSTRUCTION

Note: Please do not tighten all bolts until the bed is assembled completely

STEP 2

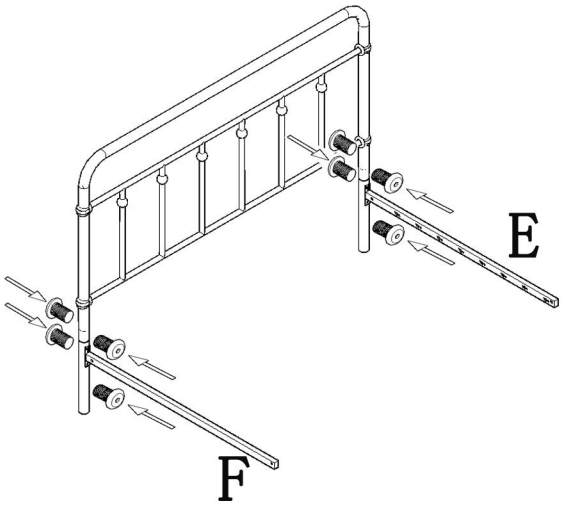

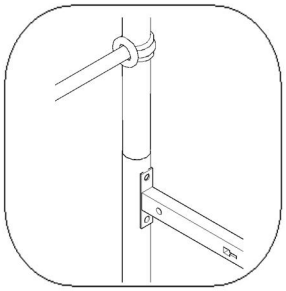

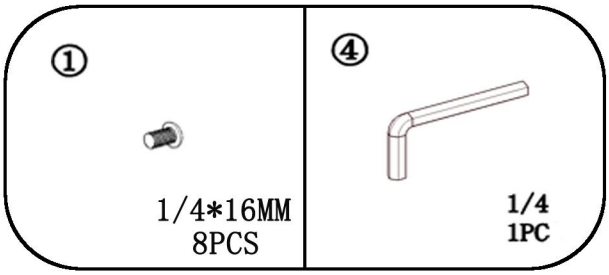

STEP 3

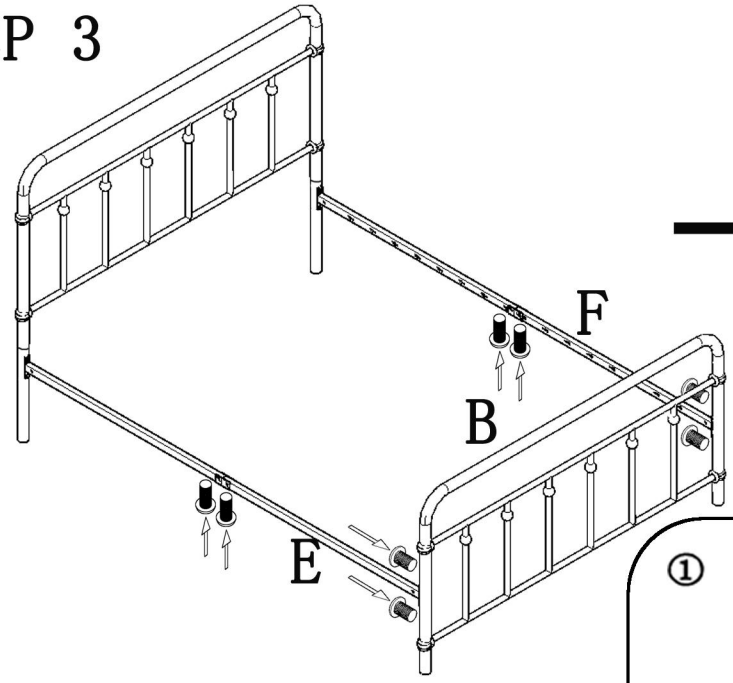

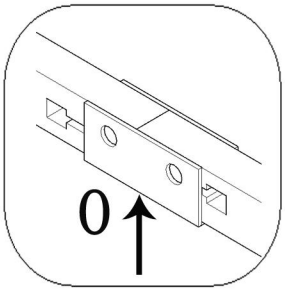

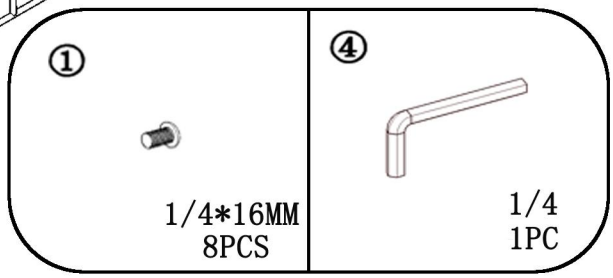

ASSEMBLY INSTRUCTION

Note: Please do not tighten all bolts until the bed is assembled completely

STEP 4

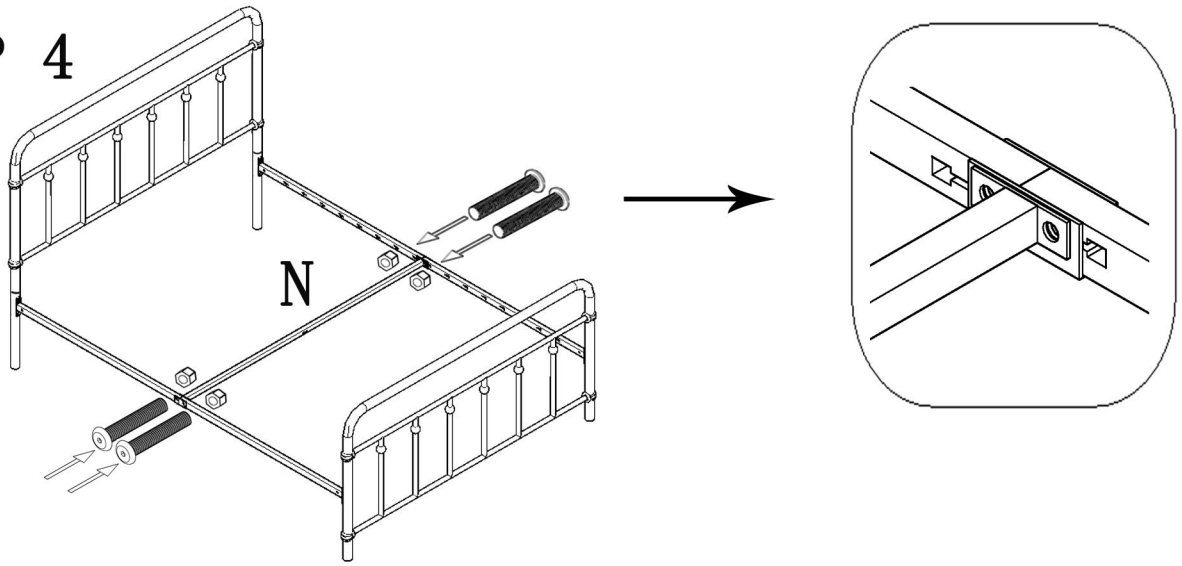

②	③	④	⑤
1/4*35MM 4PCS	1/4 4PCS	1/4 1PC	1/4 1PC

STEP 5

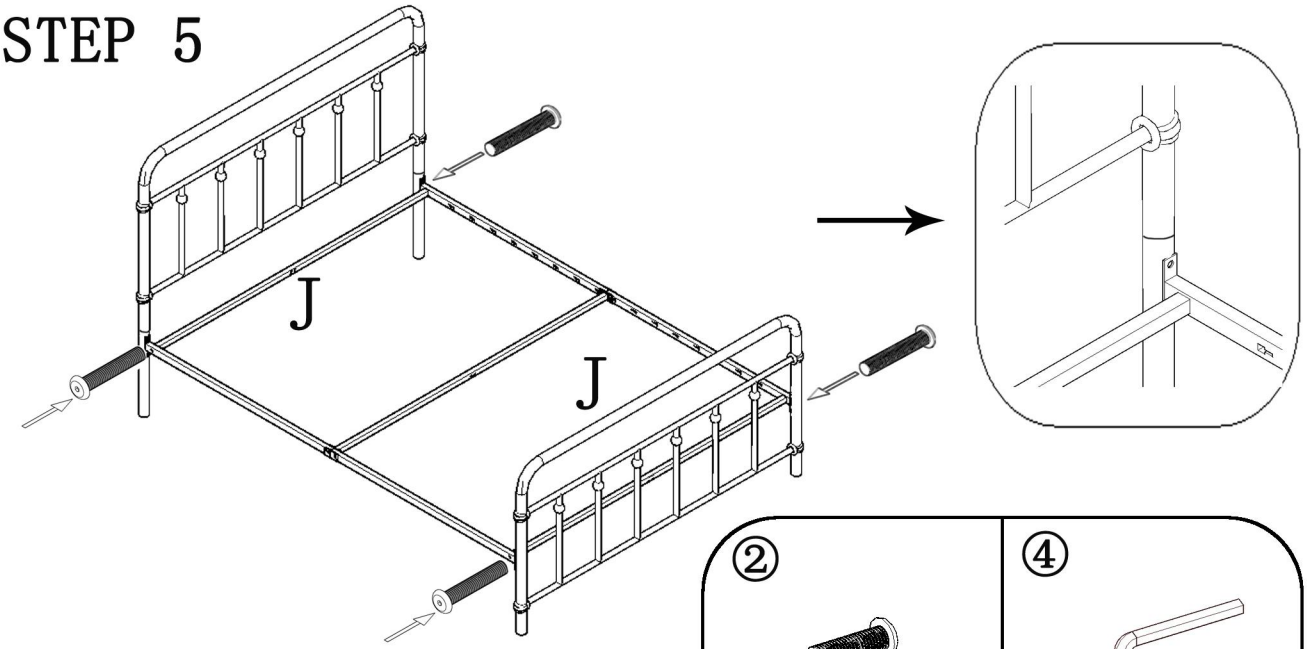

②	④
1/4*35MM 4PCS	1/4 1PC

ASSEMBLY INSTRUCTION

Note: Please do not tighten all bolts until the bed is assembled completely

STEP 6

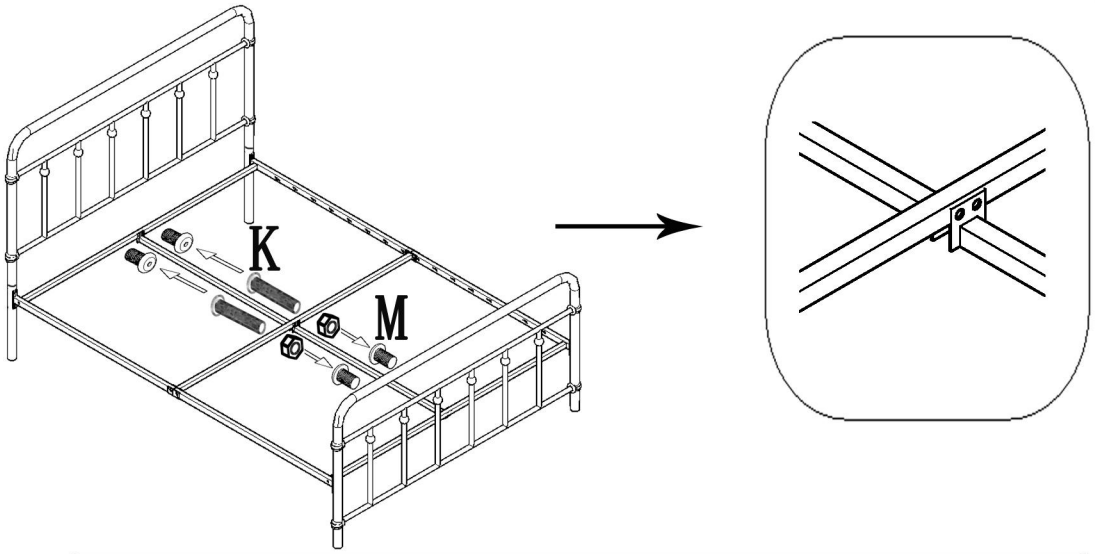

①	②	③	④	⑤
1/4*16MM 4PCS	1/4*35MM 2PCS	1/4 2PCS	1/4 1PC	1/4 1PC

STEP 7

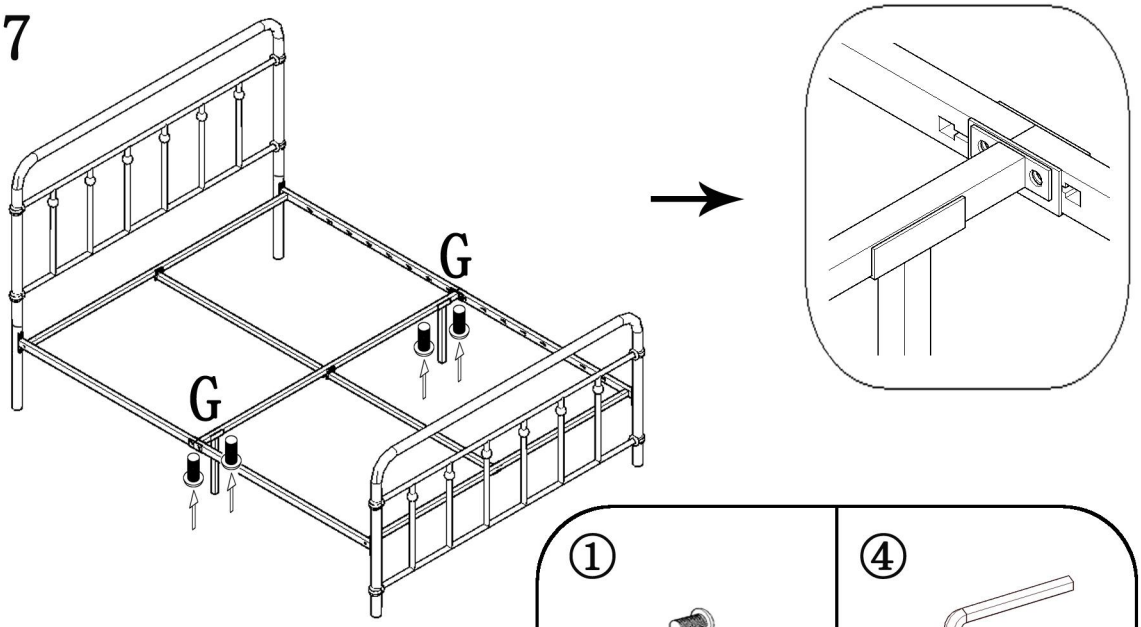

①	④
1/4*16MM 4PCS	1/4 1PC

ASSEMBLY INSTRUCTION

Note: Please do not tighten all bolts until the bed is assembled completely

STEP 8

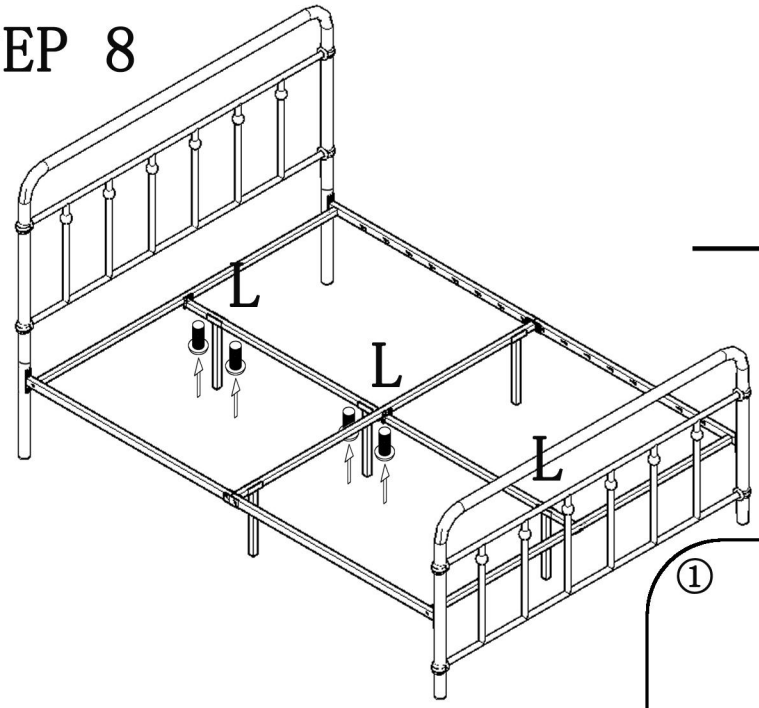

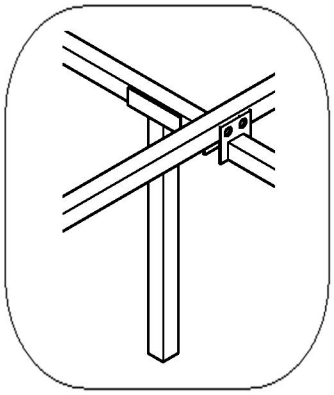

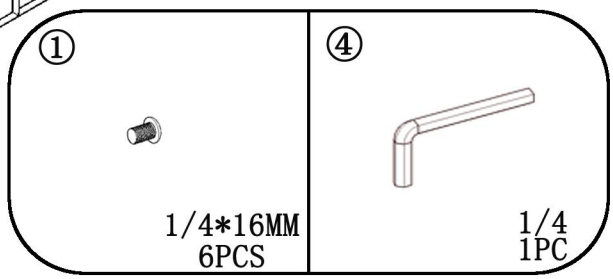
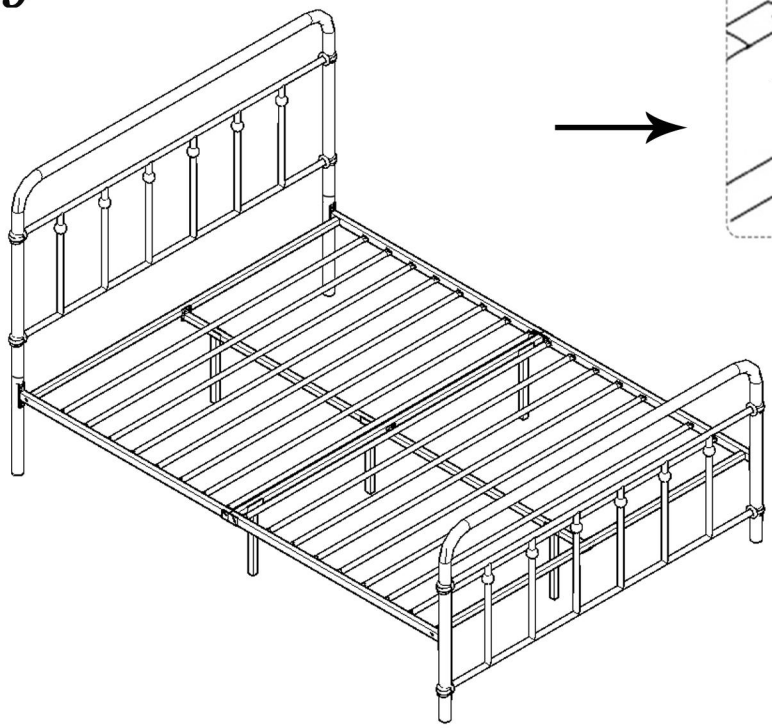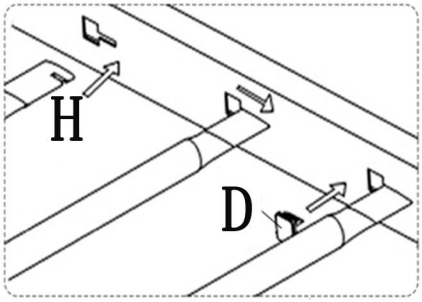
STEP 9