ASSEMBLY INSTRUCTIONS

N842P492643

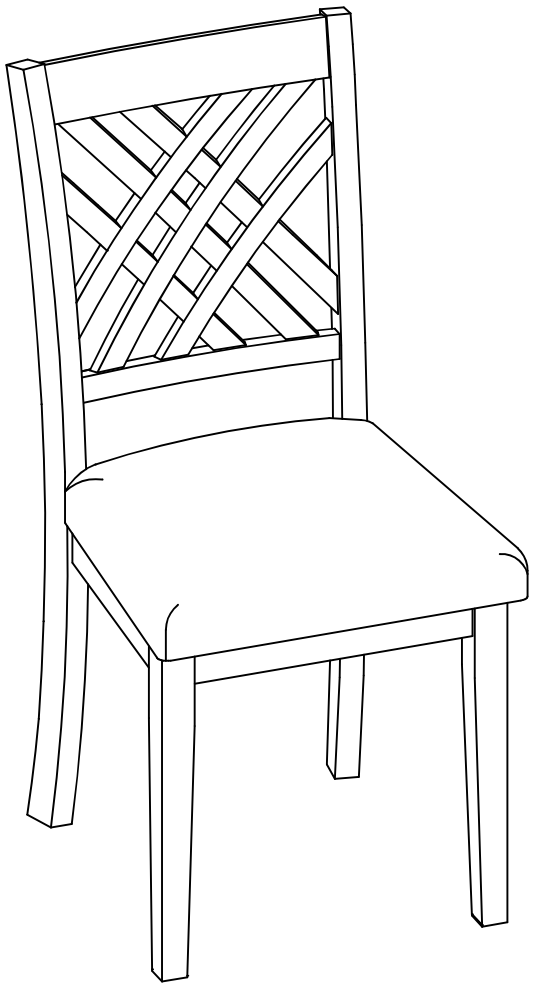

NOTE: 50% TIGHTEN BEFORE FIXING ALL BOLTS

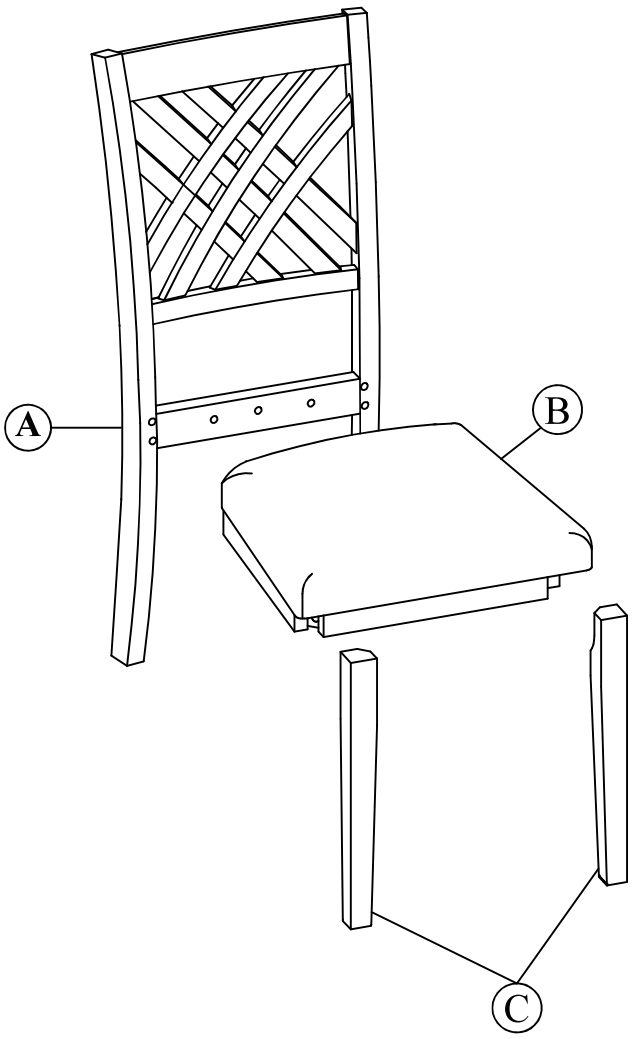

Notice:

1. 50% Tighten before fixing all screws, Allen wrench is recommended instead of an electric drill.
2. Place the item on a flat ground to adjust and make sure itremains stable.
3. Tighten up all screws with tools gradually.
4. If the screws are not aligned with holes during assembly,please loosen all the other screws to 50% and continue the assembly process.
5. If the item is not stable,please loosen all thescrews,adjust it on a flat ground and tighten up all screws again.
6. Note : If one or some screws are fully tightened during assembly,chances are the others will not be aligned with holes. In addition,all the holes are designed to be relatively larger to provide more space for the adjustmen tof the screws.

PART LIST

A	B	C
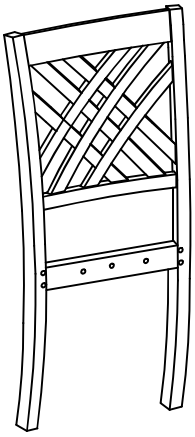	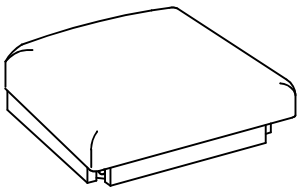	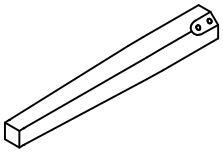
Solid Back Frame (1pc)	Seat Frame with Cushion (1pc)	Front Leg (2pcs)

HARDWARE LIST

1	2	3	4
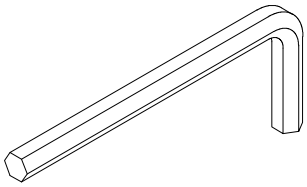	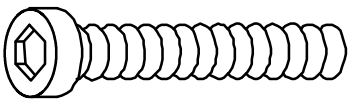	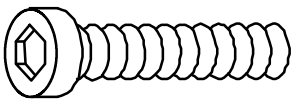	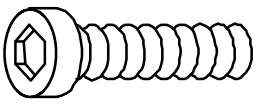
Allen key 4mm (1pc)	Bolt 1/4"x75mm(4pcs)	Bolt 1/4"x55mm(4pcs)	Bolt 1/4"x38mm(2pcs)

5	6
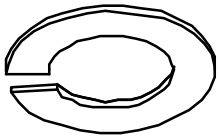	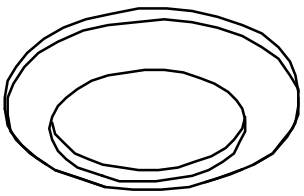
Lock washer Ø1/4" (10pcs)	Flat washer Ø1/4"*Ø19mm (10pcs)

STEP 1

1	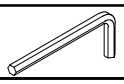	Allen Key 4mm	1pc
2	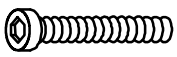	Bolt 1/4"x75mm	4pcs
4	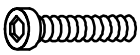	Bolt 1/4"x38mm	2pcs

5		Lock washer Ø1/4"	6pcs
6		Flat washerØ1/4"*Ø19mm	6pcs

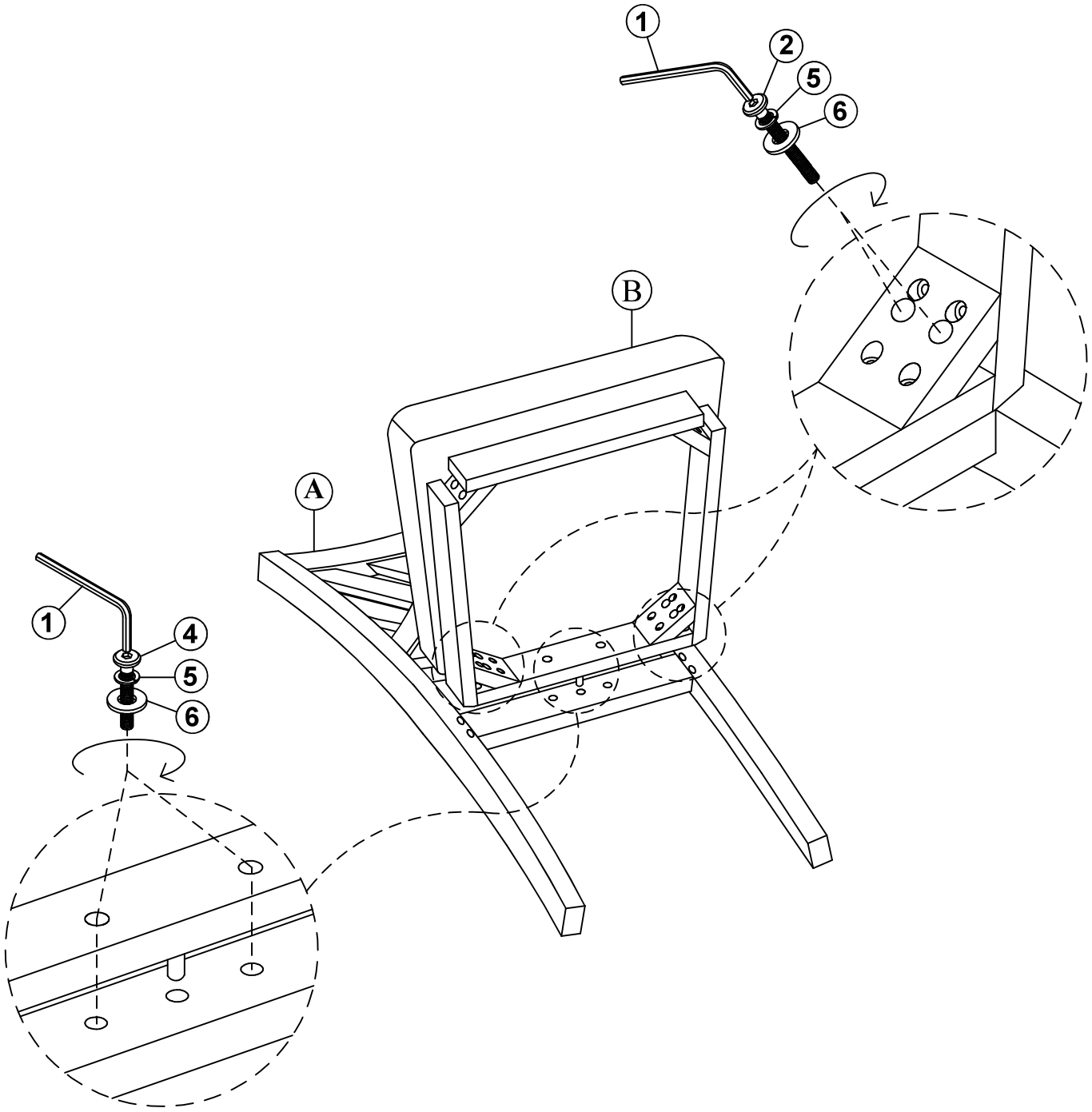

STEP 2

1	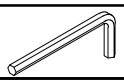	Allen Key 4mm	1pc
3	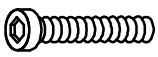	Bolt 1/4"x55mm	4pcs

5		Lock washer Ø1/4"	4pcs
6		Flat washerØ1/4"*Ø19mm	4pcs

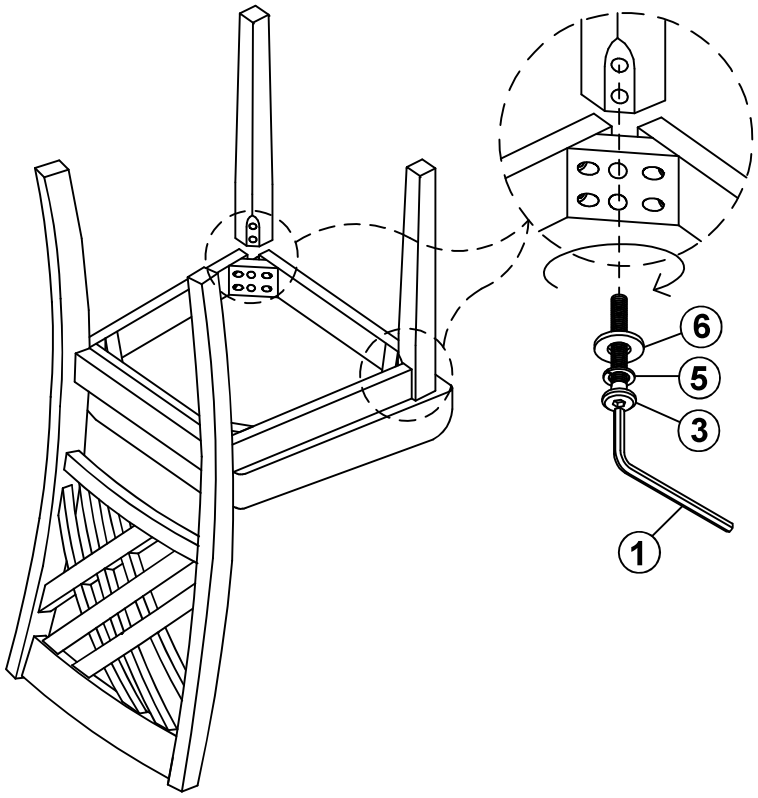

COMPLETED

