Owner Manual

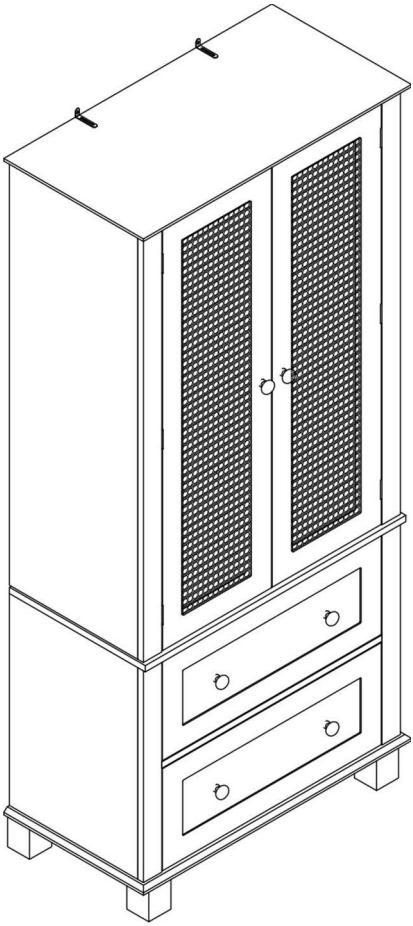

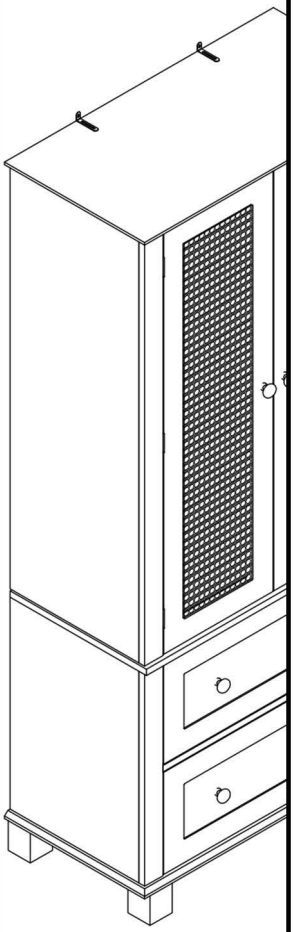

WARRANTY

We strive to offer high quality product and we also try our best to satisfy each customer that order from us, no matter on products or services as needed. Each customer receives a record of their order, such as the order number or item receipt. For any items that are out of warranty period, you may still be able to purchase the replacement parts from our company if they are available.

MAINTENANCE AND WARNING

Please read the manual thoroughly before you start installing.

Please keep the product away from sharp object.

Packaging and small parts may have chocking hazard, please keep them away from children and pets.

Please clean the product according to each clean code, check the product description for more information.

Please keep the product away from fire.

If you have any other questions, please contact us, we will be glad to help you out.

If the product is placed under direct sunlight, the pattern or color might fade away overtime.

Check the product periodically to make sure everything is secured and tightened.

Always use proper tools for installation.

Do not jump on the product.





Two people





Around 60 min

PRODUCT DESCRIPTION

Multi-purpose tall wood-and-rattan cabinet for living room, dining room, or bedroom. Holds media gear, tableware, or clothing and sundries—ideal for small apartments where one piece does the job of several.

Wood rattan-pattern tall cabinet with simple square shape and clean lines. The cabinet body with wood grain matches hollow rattan doors, blending retro texture and fresh natural tone. It fits Nordic, cream and mainstream home styles, serving as both storage and decoration.

Made of high-quality manufactured wood with solid wood legs for strong support. Natural rattan doors with hollow weave ensure breathability, preventing dampness and odors. Fine craftsmanship and smooth edging offer durability and eco-friendliness beyond comparable artificial board cabinets.

Special anti-tip bracket secures both cabinet for protection. Drawers come with safety stops to prevent full sliding out. Soft rounded corners with no sharp edges, safe for families with kids.

Knock-down split design reduces shipping volume and cost. Full set of installation hardware included. Basic assembly only takes about 60 minutes, easier with two people.

EXPLODED VIEW

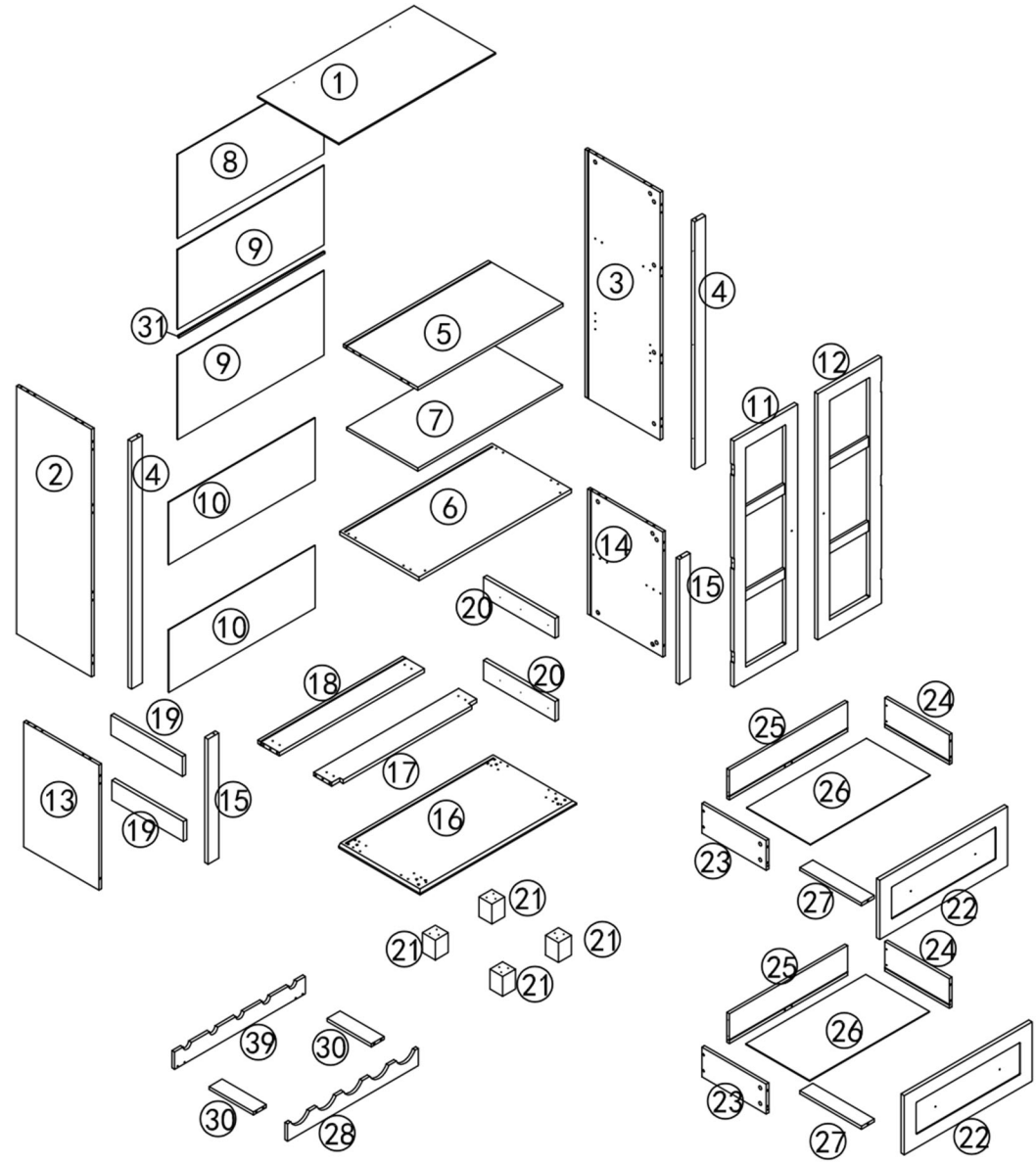

PARTS

① x1 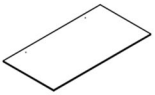 Top panel	② x1  Side panel	③ x1  Side panel	④ x2  Support bar
⑤ x1  Shelf board	⑥ x1  Shelf board	⑦ x1 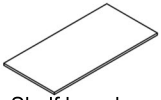 Shelf board	⑧ x1 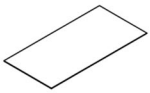 Back panel
⑨ x2 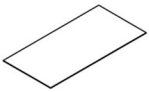 Back panel	⑩ x2 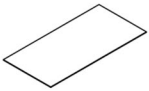 Back panel	⑪ x1 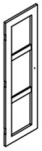 Door	⑫ x1  Door
⑬ x1  Side panel	⑭ x1 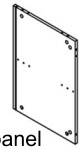 Side panel	⑮ x2  Support bar	⑯ x1 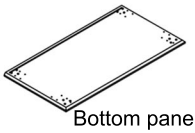 Bottom panel
⑰ x1 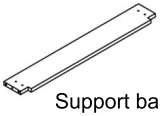 Support bar	⑱ x1  Support bar	⑲ x2 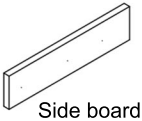 Side board	⑳ x2 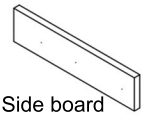 Side board
㉑ x4  Legs	㉒ x2 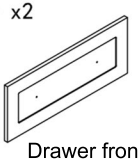 Drawer front	㉓ x2 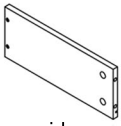 Drawer side panel	㉔ x2 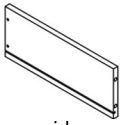 Drawer side panel
㉕x2  Drawer back panel	㉖ x2 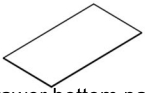 Drawer bottom panel	㉗ x2 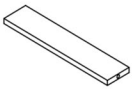 Drawer support board	㉘ x1  Wine glass rack
㉙x1 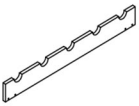 Wine glass rack	㉚ x2  Side board	㉛ x1  Groove strip	

HARDWARE

TOOL LIST

NOTE: Designated with (★) We provide additional spare parts in the hardware package

A x 54 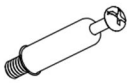 ★Cam bolt	B x 54  ★Cam nut	C x 50  ★Wooden dowel Ø6*30mm	D x1 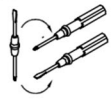 Screwdriver
E x 44  ★Back plate buckle	F x 2 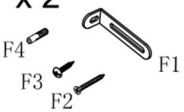 Anti-tip hardware	G x42  ★Screws M3.5 x 12 mm	H x 12  ★Screws M4 x35mm
I x 4  Adjustable glide	J x 6 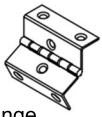 Hinge	K x 4  Shelf support	L x 2 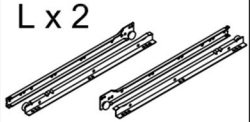 Drawer slide
M x 6  Handle	N x 2 M4 x 16 mm Screw	O x 4  M4 x 12 mm Screw	P x 44  Screw ★M3.5 x 16 mm
Q x 2 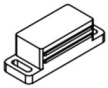 Magnetic catch	S x 2  Magnetic iron sheet	T x 24  ★ Screw	

Please make sure all hardware&packing material fitting the list. Especially some small accessories may be missing during transportation. Please contact us if you have any question.

step 1---Insert Cam bolt (A)

Insert cam bolt (A) into pre-drilled holes of Support bar (4) ,tighten it with screwdriver.

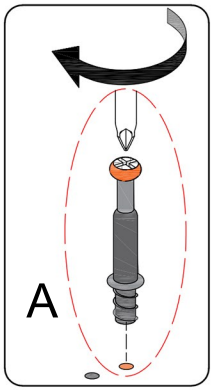

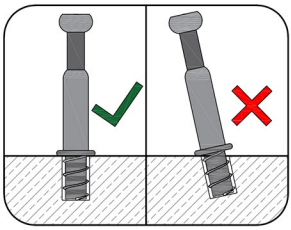

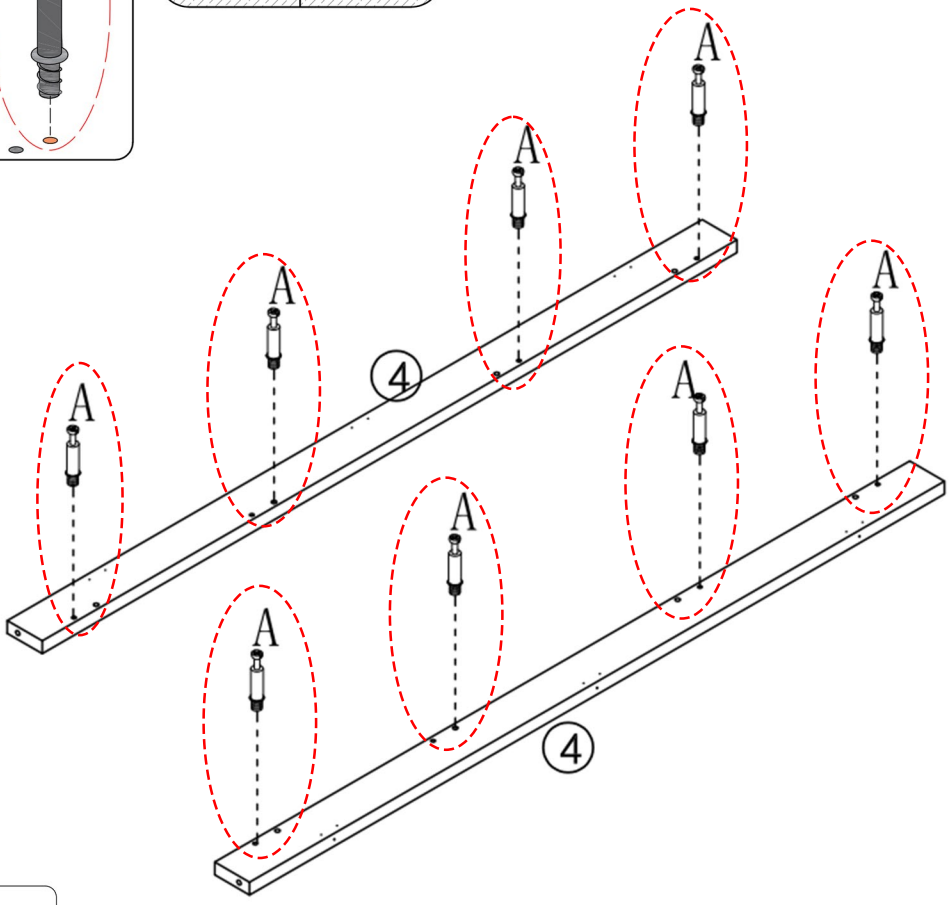



step 2 ---Install Support bar (4)

1.Insert Wooden dowel (C) into pre-drilled holes of Side panel (3) ,and then insert support bar (4) into it as shown.
2.Insert Cam nut (B) into the pre-drilled holes of Side panel (3),tighten it with screwdriver.

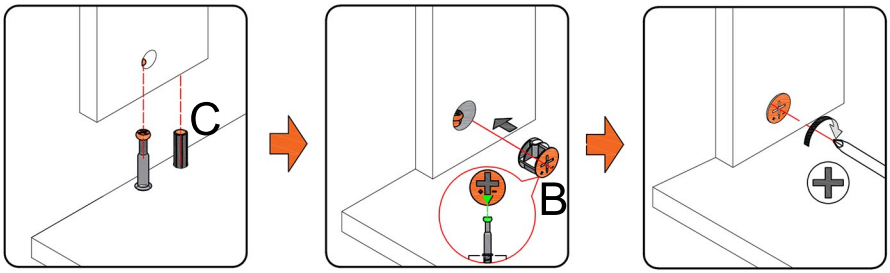

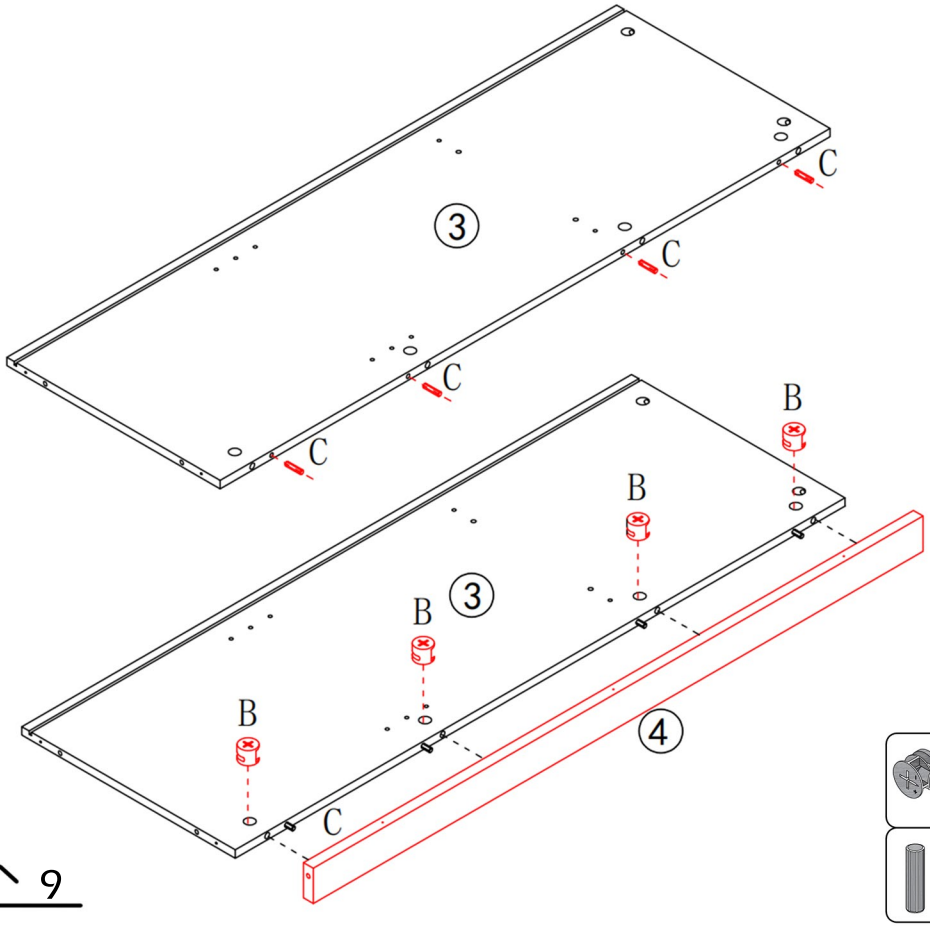





step 3 ---Insert Support bar (4)

1.Insert Wooden dowel (C) into pre-drilled holes of Side panel (2) ,and then insert support bar (4) into it as shown.
2.Insert Cam nut (B) into the pre-drilled holes of Side panel (2),tighten it with screwdriver.

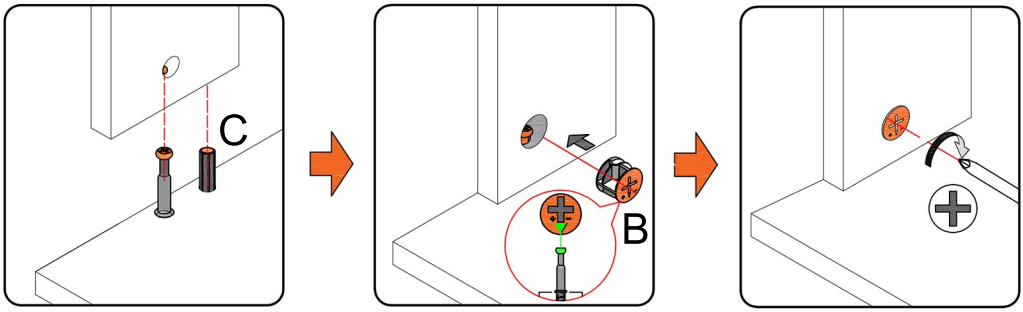

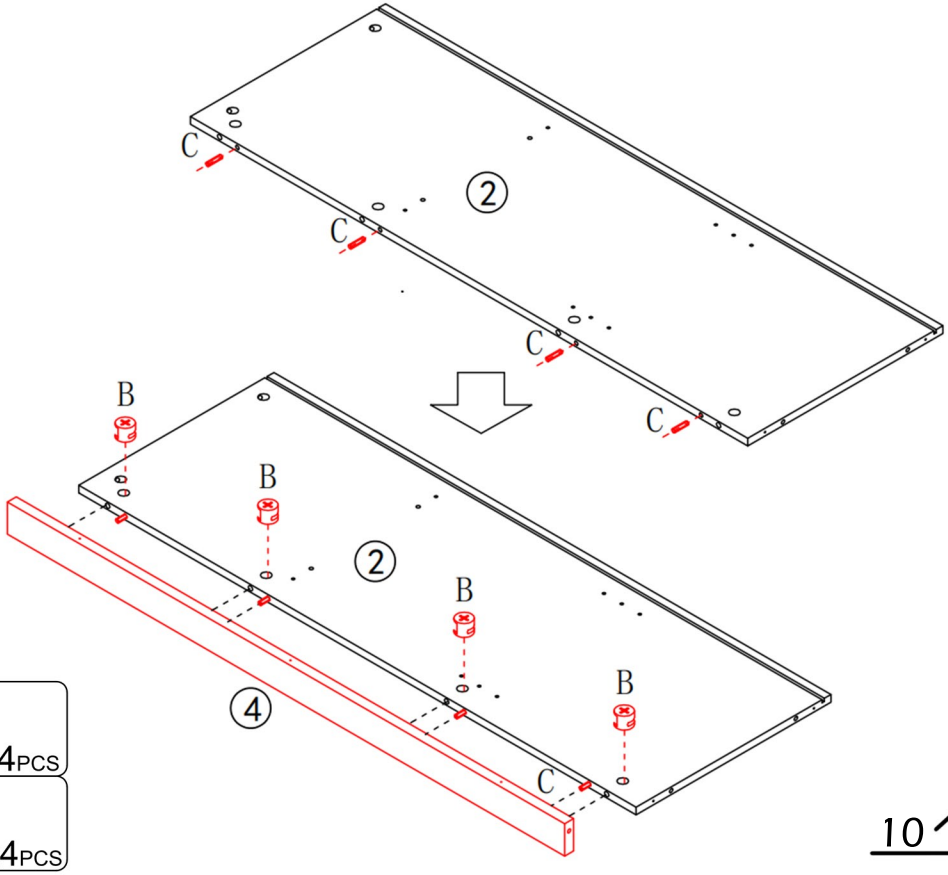

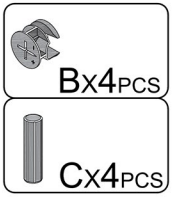

step 4 ---Insert Cam bolt (A)

Insert cam bolt (A) into pre-drilled holes of Side panel (2&3) ,tighten it with screwdriver.

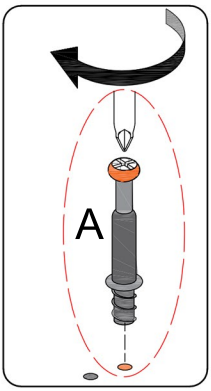

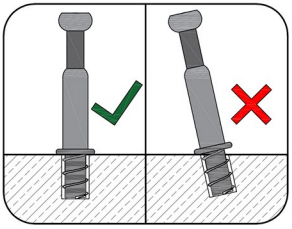

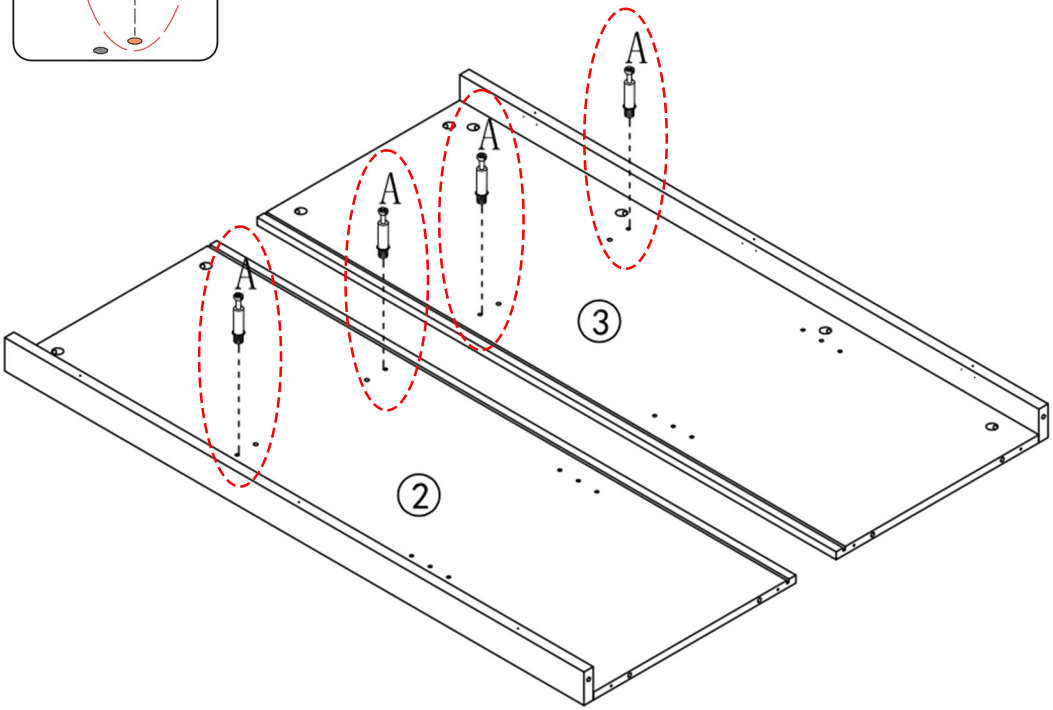



step 5 ---Insert Shelf board (5)

1.Insert Wooden dowel (C) into pre-drilled holes of Shelf board (5),and then insert Shelf board (5) into the pre-assembly side panel (2&3) as shown.
Note:Drawer side panel grooves face inward,and the pre-embedded holes need to be aligned with the cam bolts.
2.Insert Cam nut (B) into the pre-drilled holes of Shelf board (5),tighten it with screwdriver.

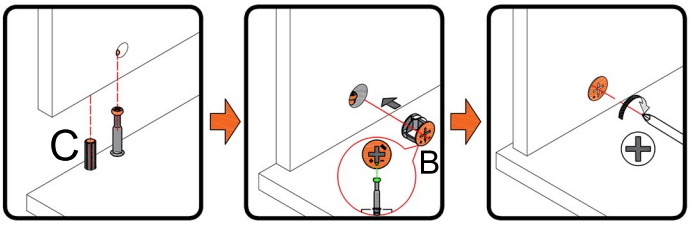

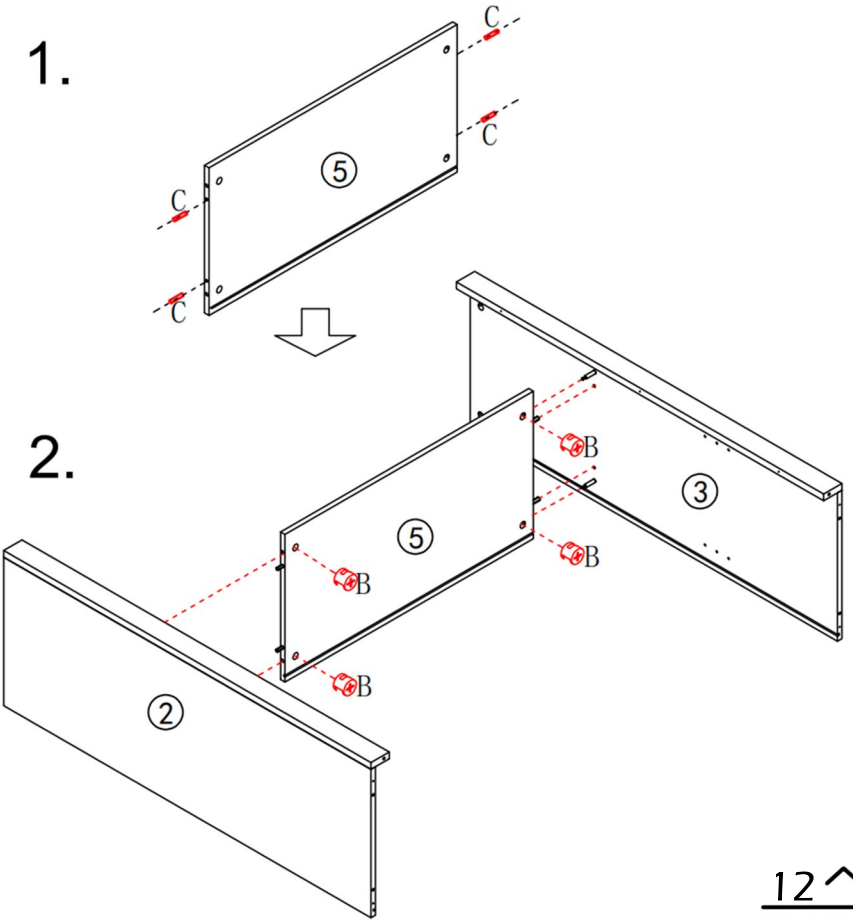

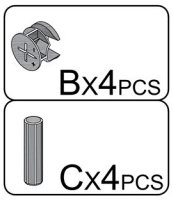

step 6 ---Install the Back panel (9) & Groove strip(31)

1.Slide the Back panel (9) into the grooves along the Groove strip (31).

2.Slide the pre-assembly Back panel (9) into the grooves along the Side panel (2&3).Ensure it fits flush and aligns tightly with the internal channels.

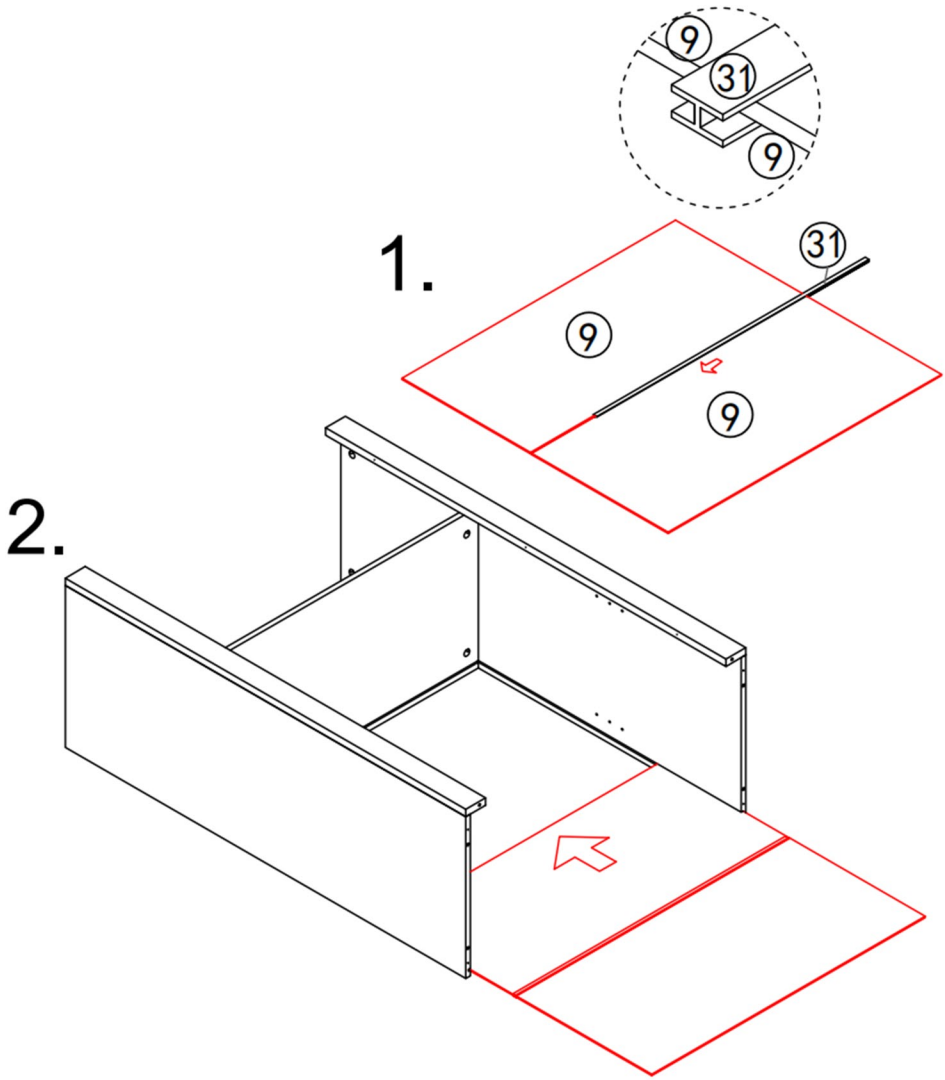

step 7 ---Install the Cam bolt (A)

Insert cam bolt (A) into pre-drilled holes of Shelf board (6) ,tighten it with screwdriver.

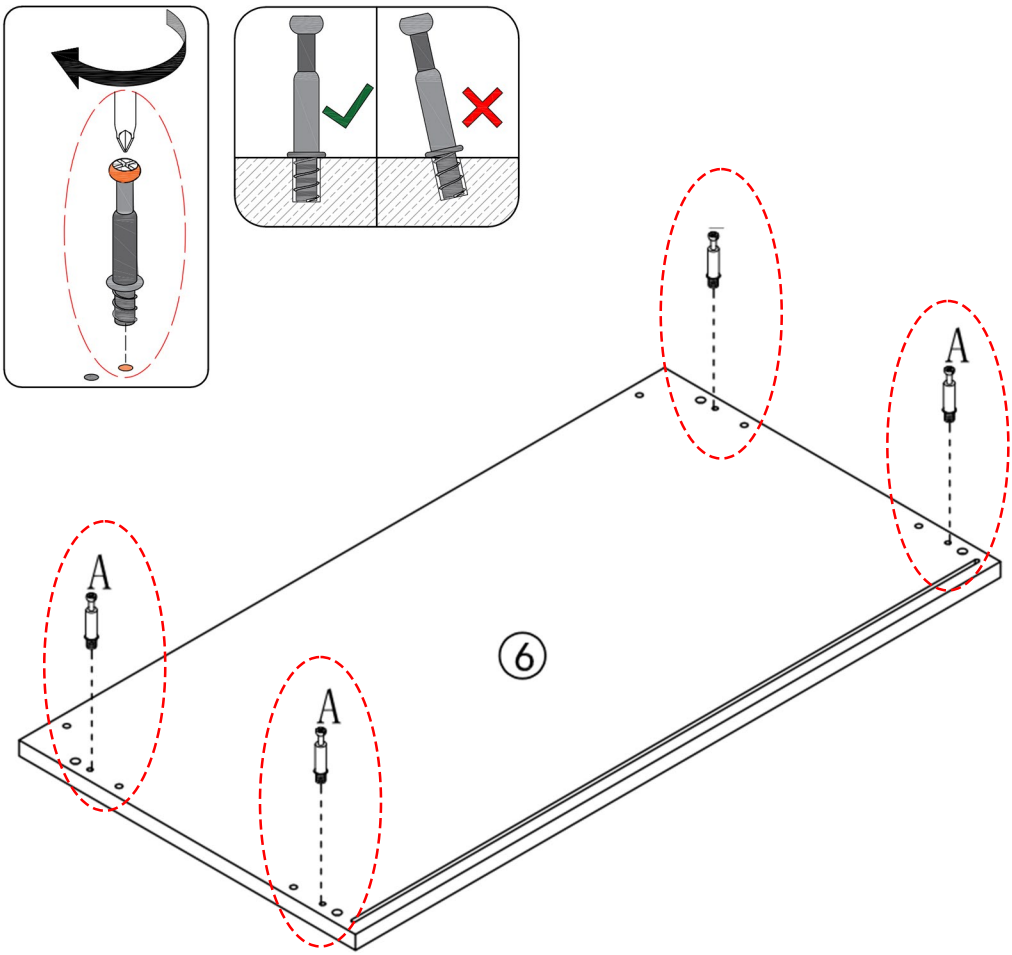



step 8 ---Install the Shelf board (6)

1.Insert Wooden dowel (C) into pre-drilled holes of Side panel (2&3) ,and then insert Shelf board (6) into it as shown.
2.Use Screw (T) to attach them,tighten it with screwdriver.

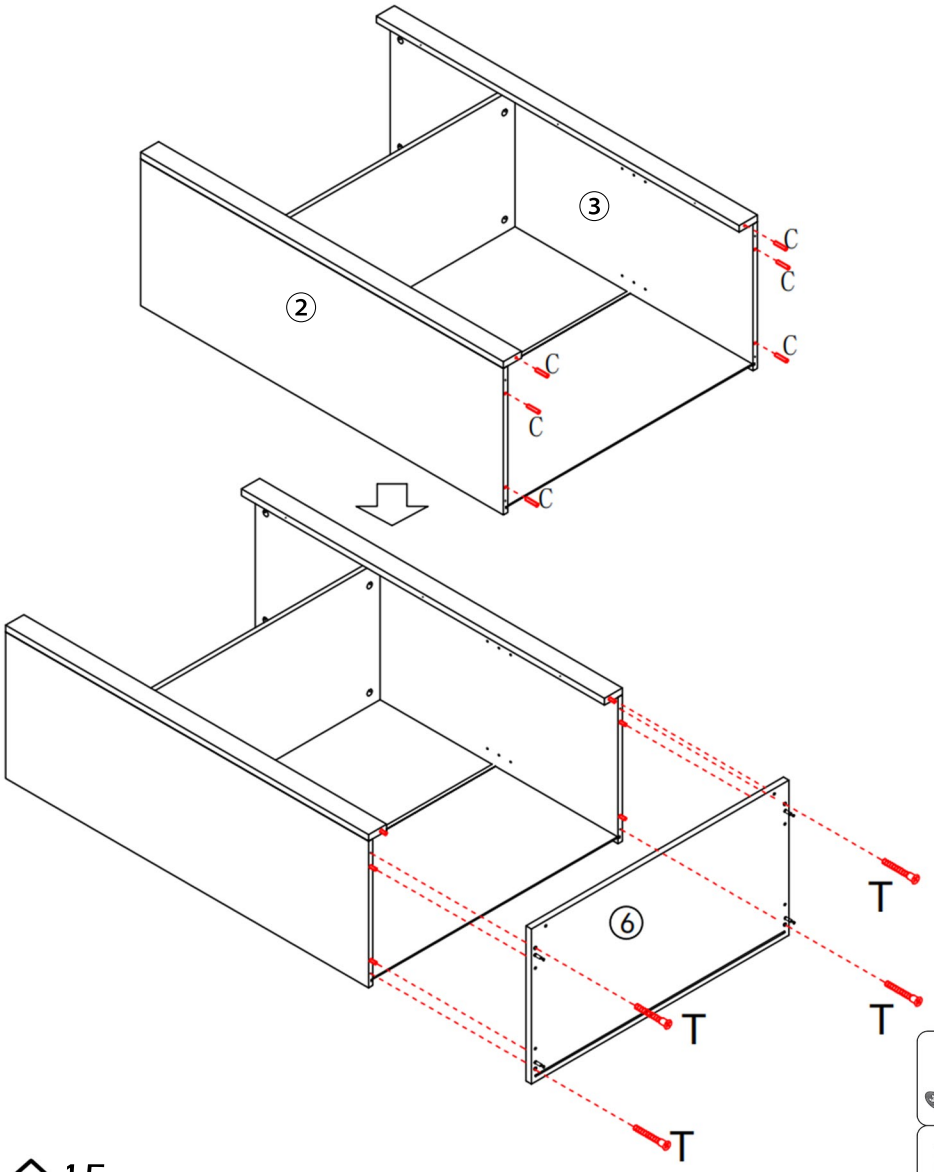





step 9 ---Install the Back panel (8)

Slide the Back panel (8) into the grooves along the Side panel (2&3). Ensure it fits flush and aligns tightly with the internal channels.

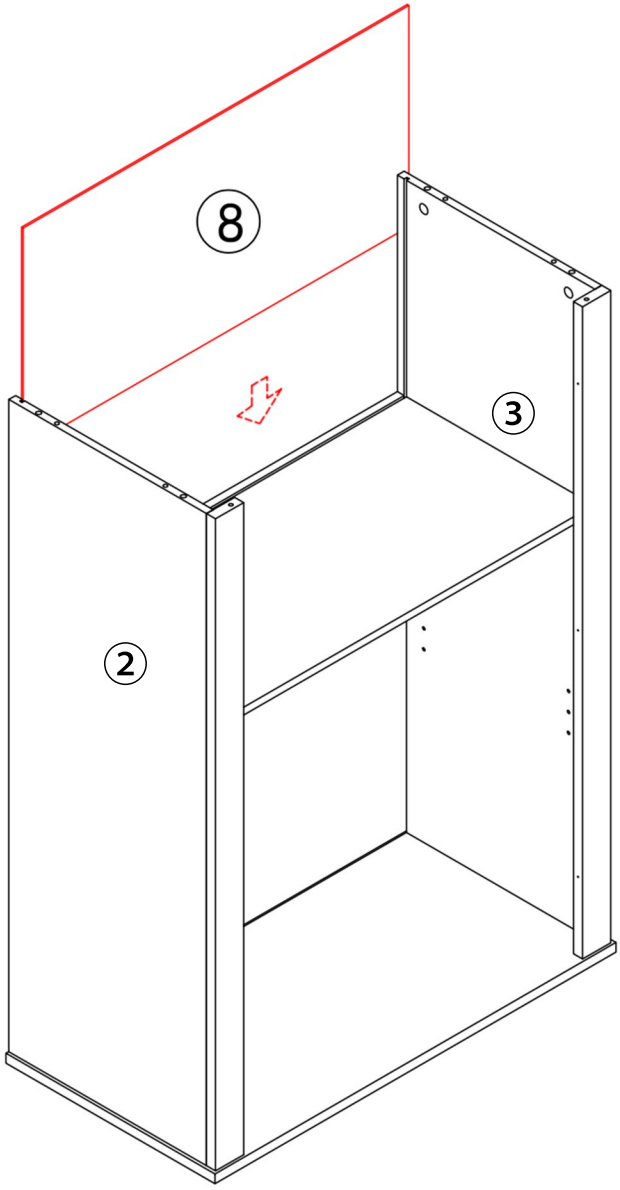

step 10 ---Install the Cam bolt (A) &Magnetic catch (Q)

1.Insert cam bolt (A) into pre-drilled holes of Top panel (1) ,tighten it with screwdriver.
2.Use Screw (G) to attach Magnetic catch (Q) to Top panel (1),tighten it with screwdriver.

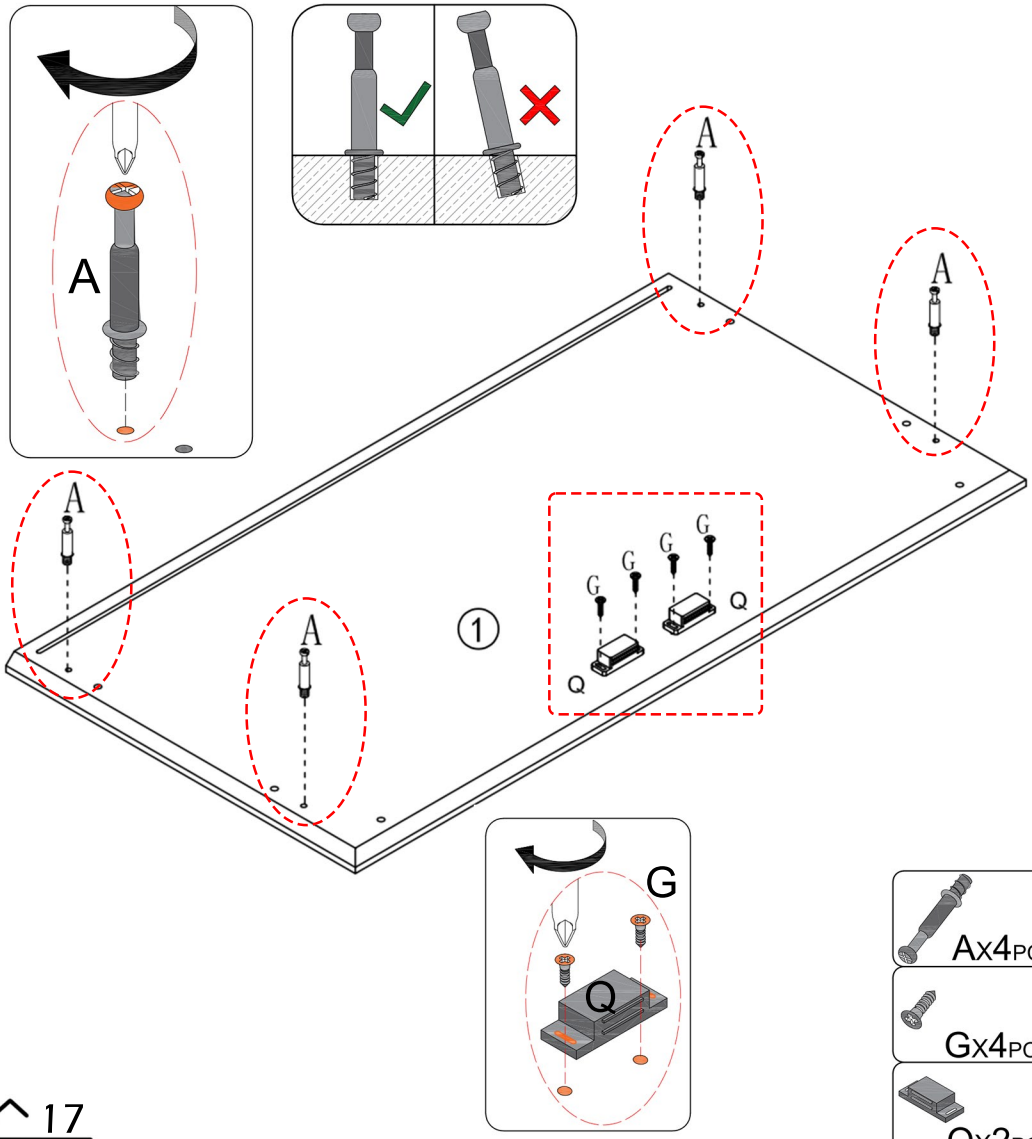

step 11 ---Install the Top panel (1)

1.Insert Wooden dowel (C) into pre-drilled holes of Side panel (2&3) ,and then insert Top panel (1) into it as shown.
2.Insert Cam nut (B) into the pre-drilled holes of Side panel (2&3),tighten it with screwdriver.

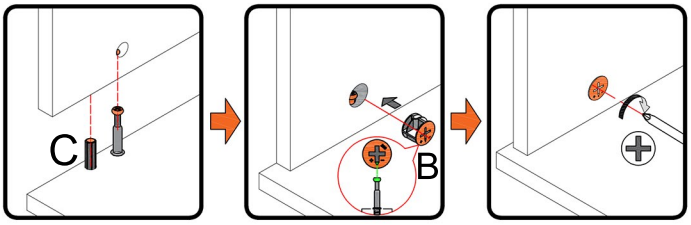

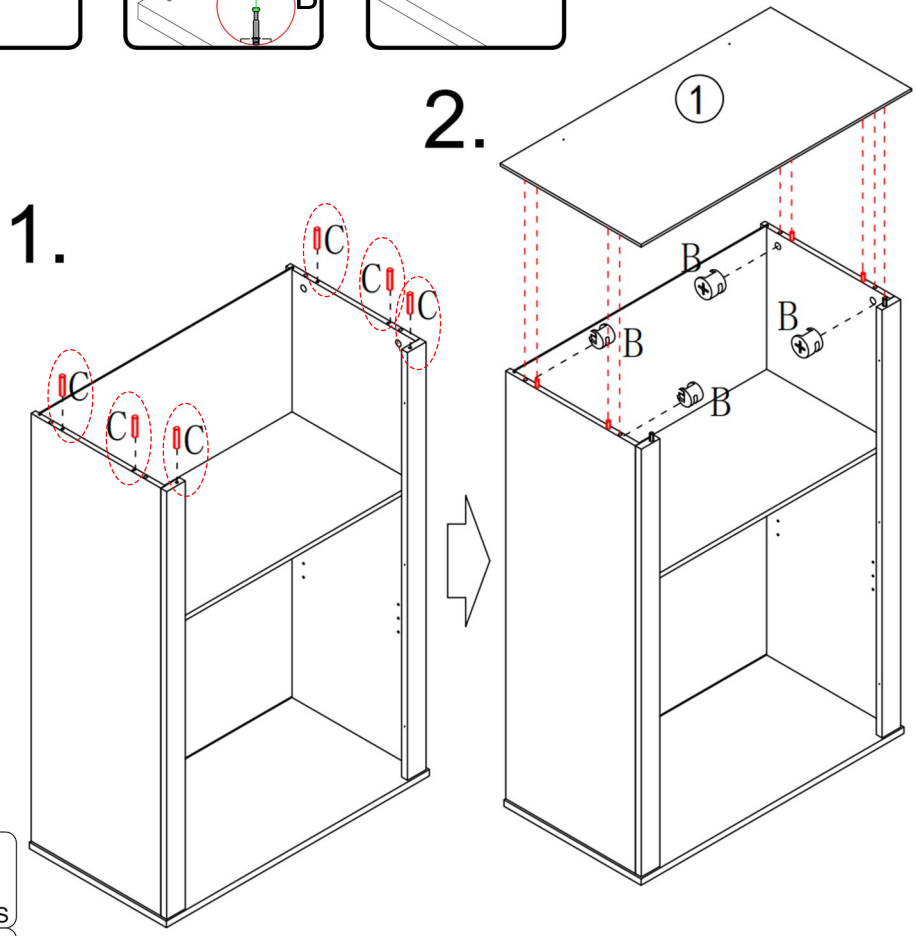





step 12 ---Install the Cam bolt (A)

Insert cam bolt (A) into pre-drilled holes of Shelf board (15) ,tighten it with screwdriver.

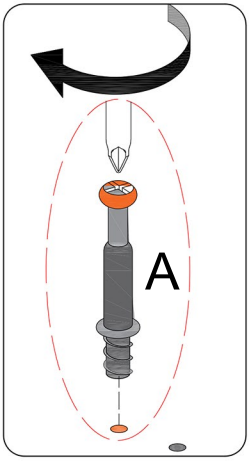

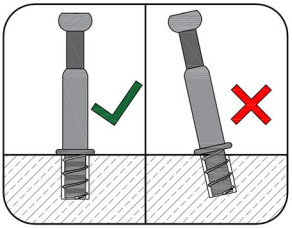

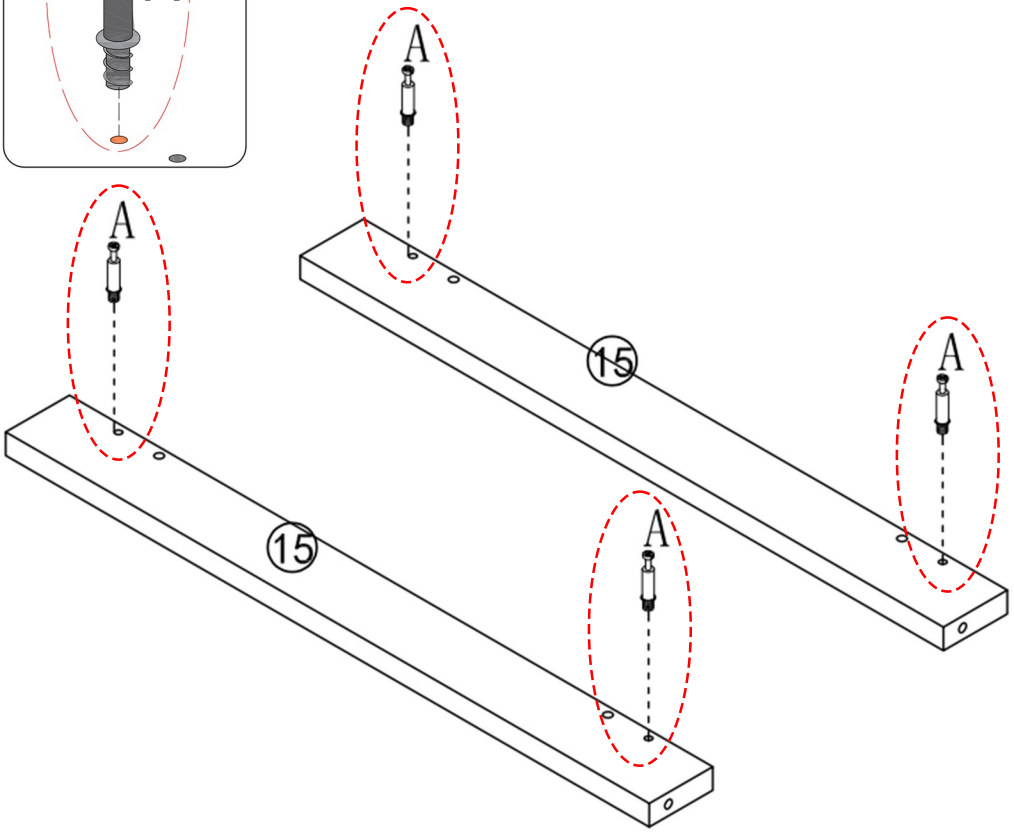



step 13 ---Install the Support bar (15)

1.Insert Wooden dowel (C) into pre-drilled holes of Side panel (13) ,and then insert Support bar (15) into it as shown.
2.Insert Cam nut (B) into the pre-drilled holes of Side panel (13),tighten it with screwdriver.

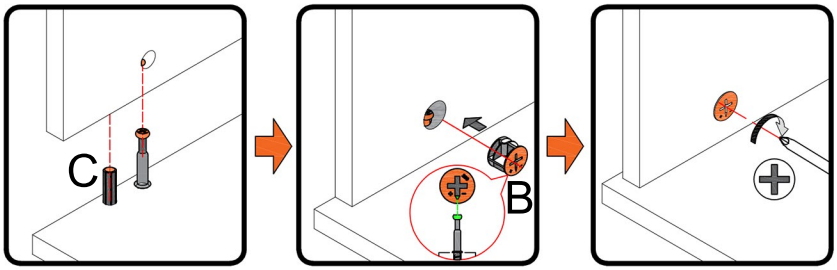

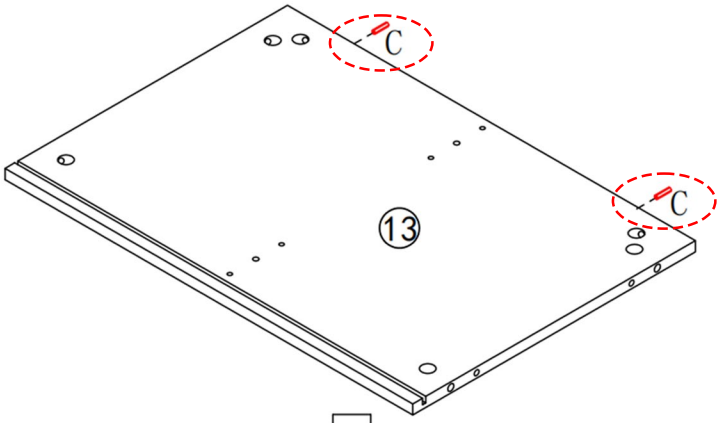

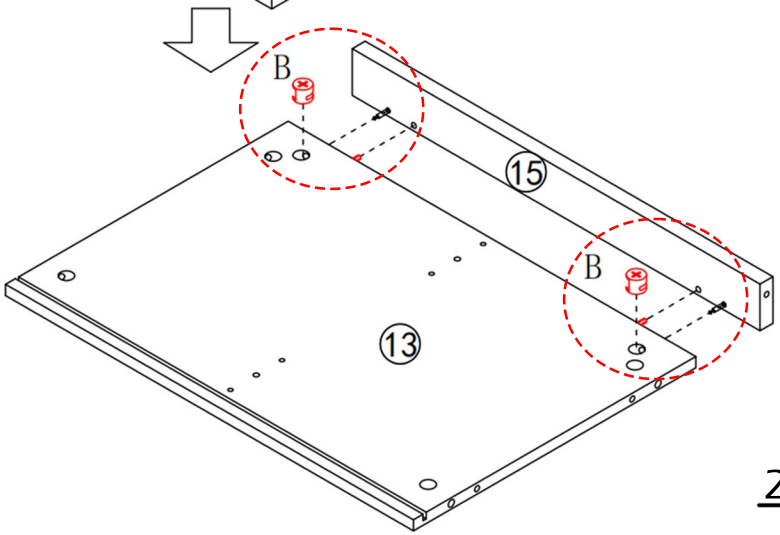

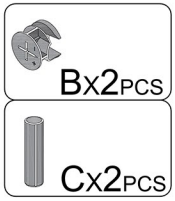

step 14 ---Install the Support bar (15)

1.Insert Wooden dowel (C) into pre-drilled holes of Side panel (14) ,and then insert Support bar (15) into it as shown.
2.Insert Cam nut (B) into the pre-drilled holes of Side panel (14),tighten it with screwdriver.

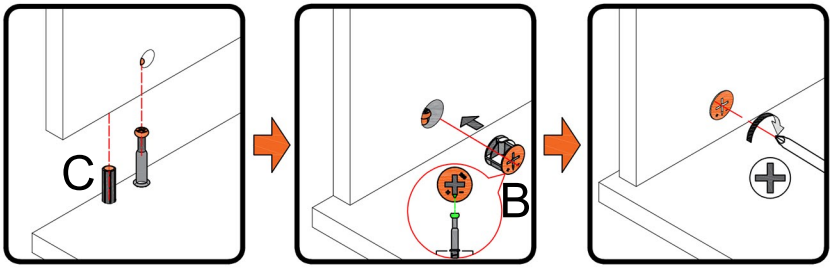

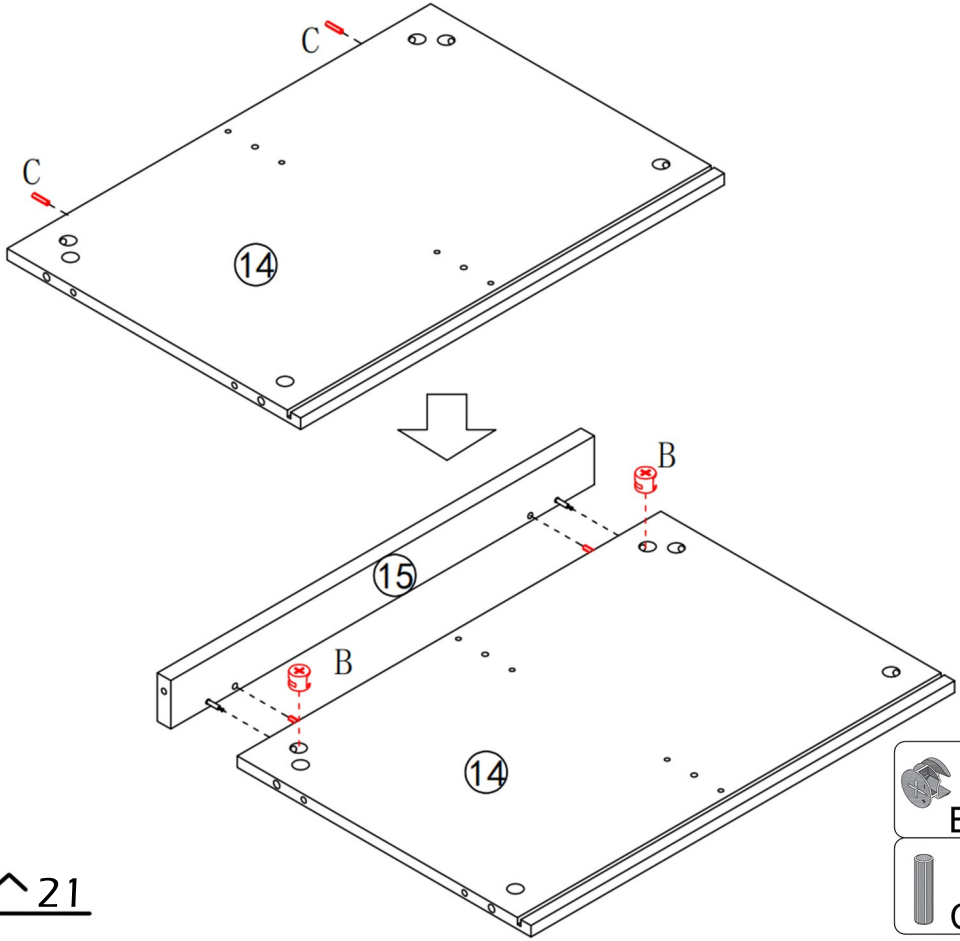

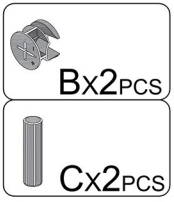

step 15 ---Install the Cam bolt (A)

Insert cam bolt (A) into pre-drilled holes of Side panel (13&14) ,tighten it with screwdriver.

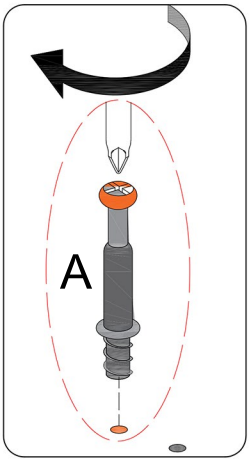

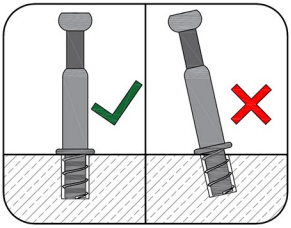

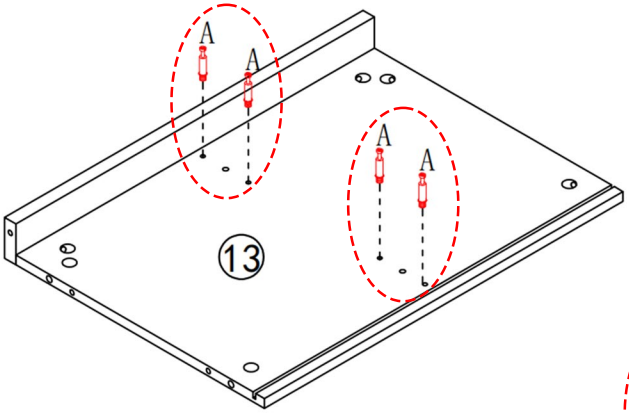

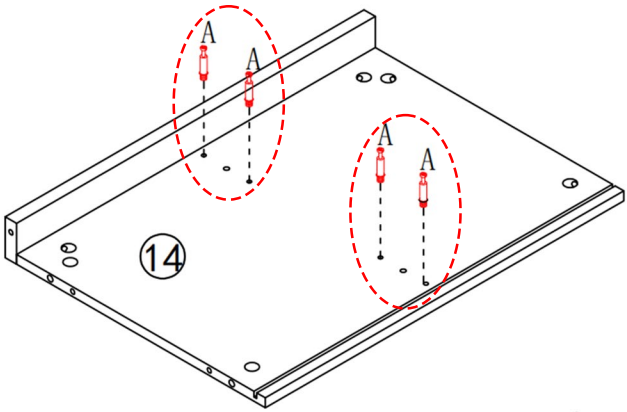



step 16 ---Install the Support bar (17&18)

1.Insert Wooden dowel (C) into Support bar (17&18) into it as shown.
2.Insert Cam nut (B) into the pre-drilled holes of Support bar (17&18), tighten it with screwdriver.

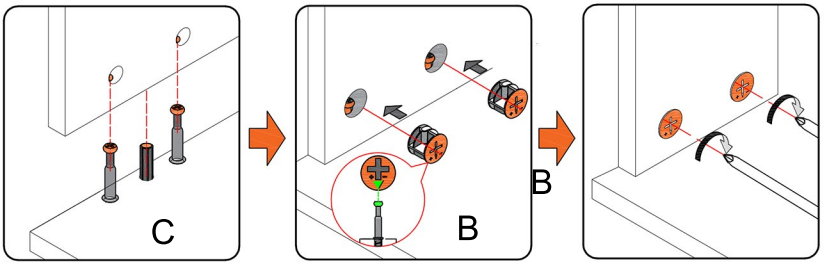

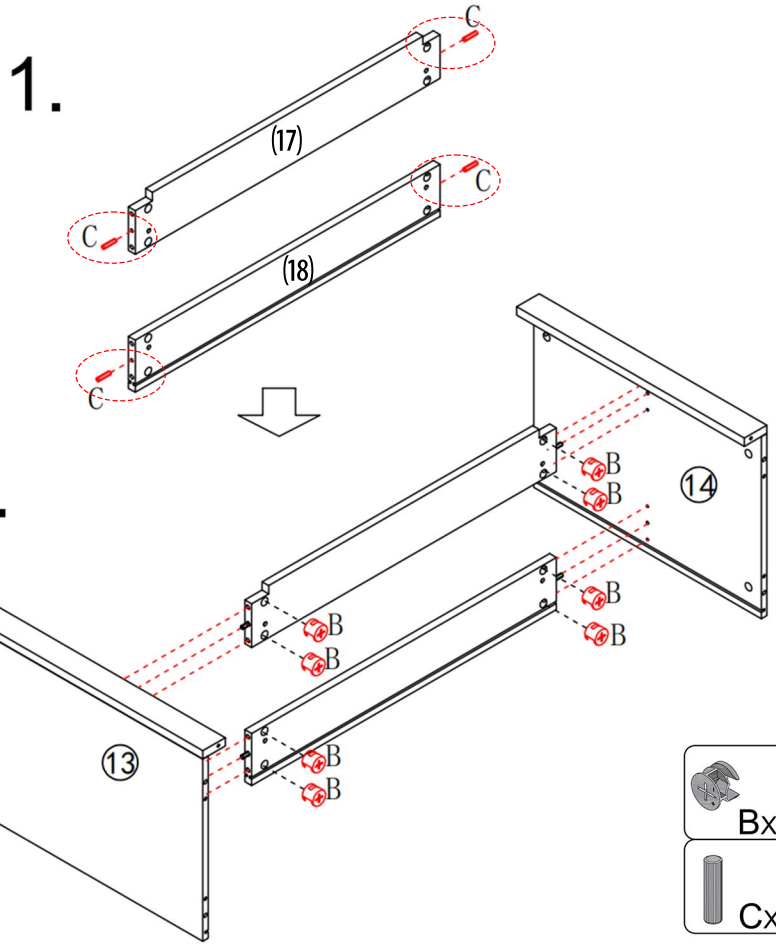

step 17---Install the Back panel (10)

Slide the Back panel (10) into the grooves along the Side panel (13&14). Ensure it fits flush and aligns tightly with the internal channels.

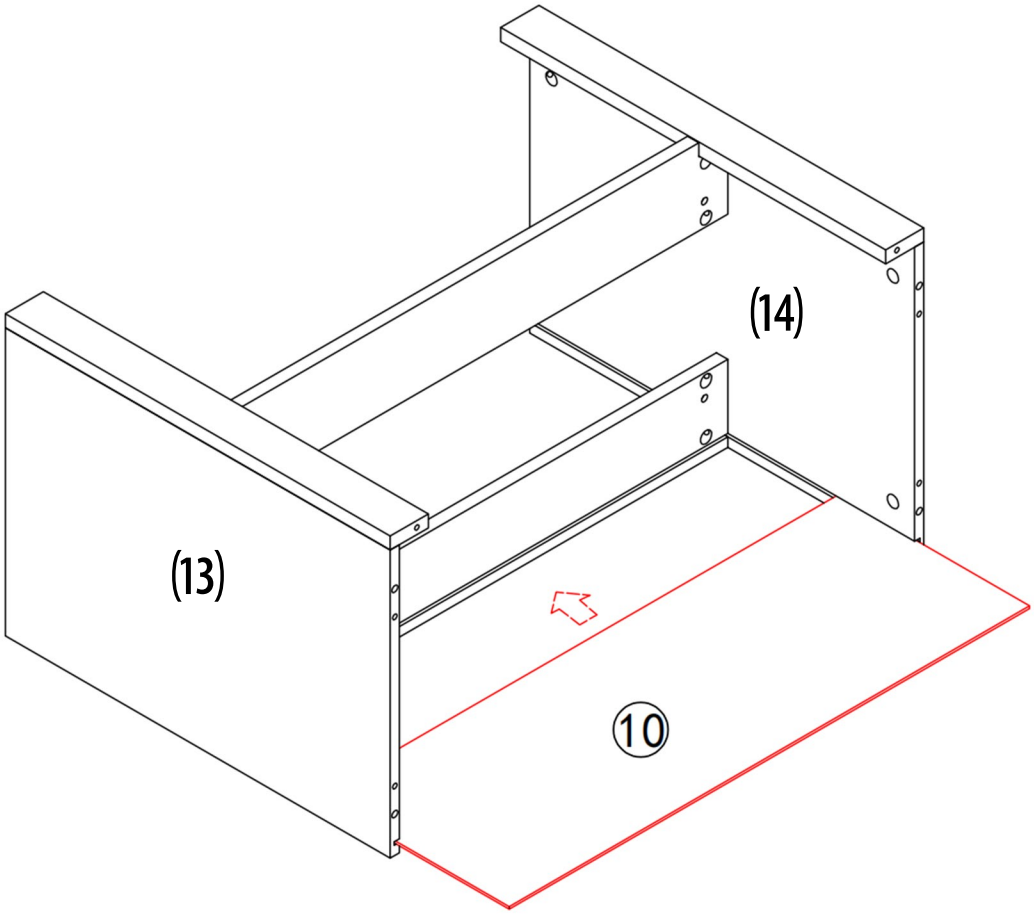

step 18 ---Install the Legs (21)

Use Screws (T) to attach Leg (21) to Bottom panel (16), make sure all holes aligned, tighten it with screwdriver.

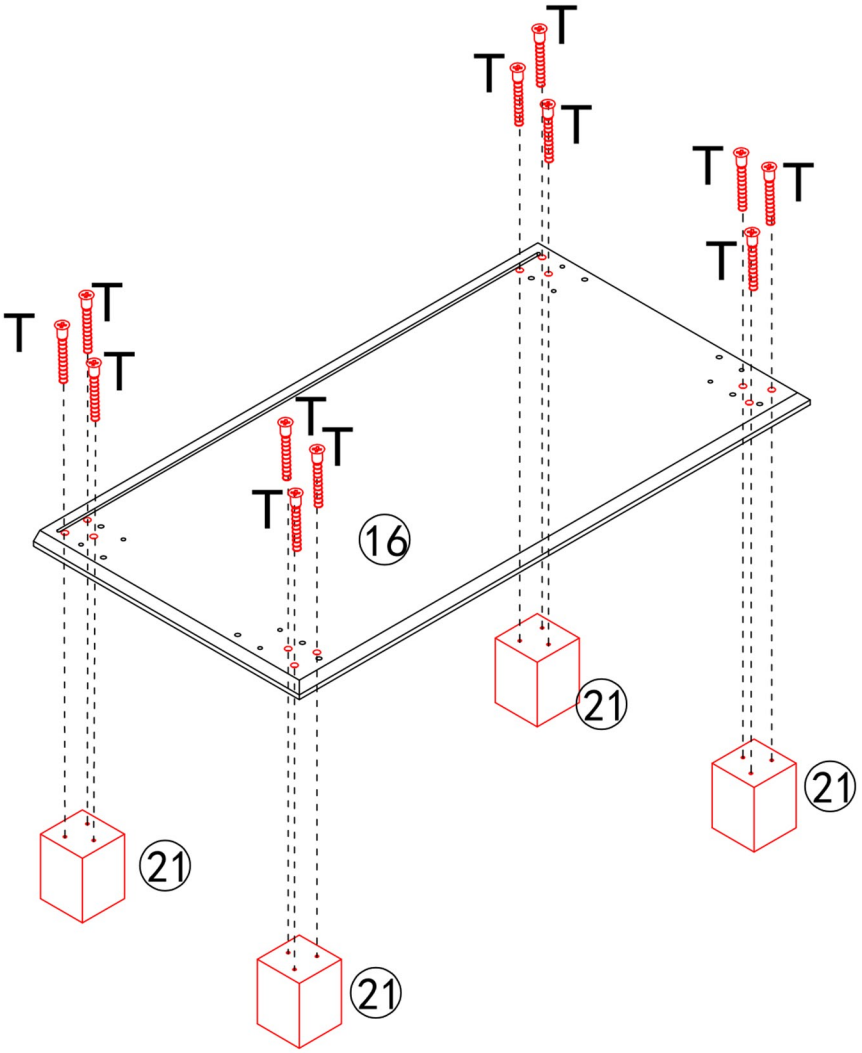

Tx12PCS

step 19 ---Install the Cam bolt (A)

Insert cam bolt (A) into pre-drilled holes of Bottom panel (16) ,tighten it with screwdriver.
Insert the wooden dowel (C) into it as shown.

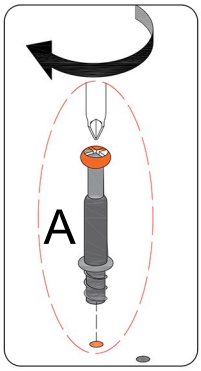

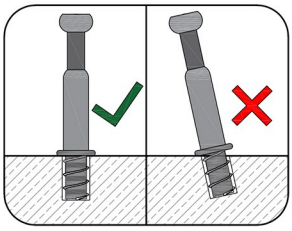

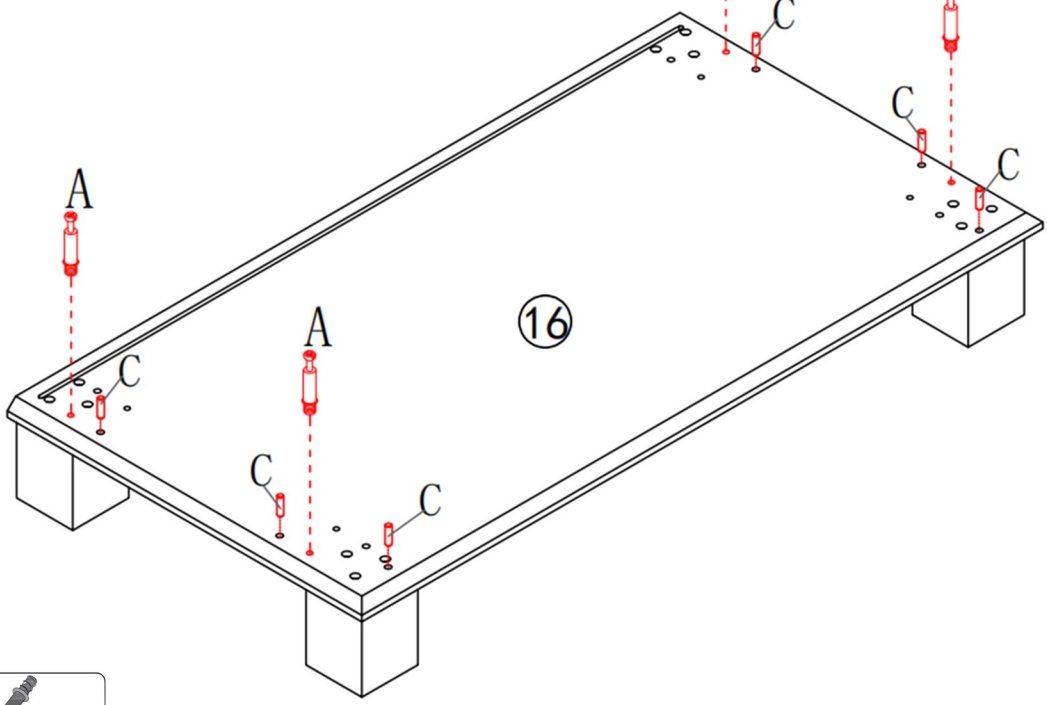





step 20 ---Install Pre-assembly part at step 19

1.Insert Pre-assembly part at step 19 into it as shown, make sure all holes aligned.

Note: When installing the Preassembly bottom panel (16), please install it in the direction as shown

2.Insert Cam nut (B) into the pre-drilled holes of Side panel (13&14),tighten it with screwdriver.

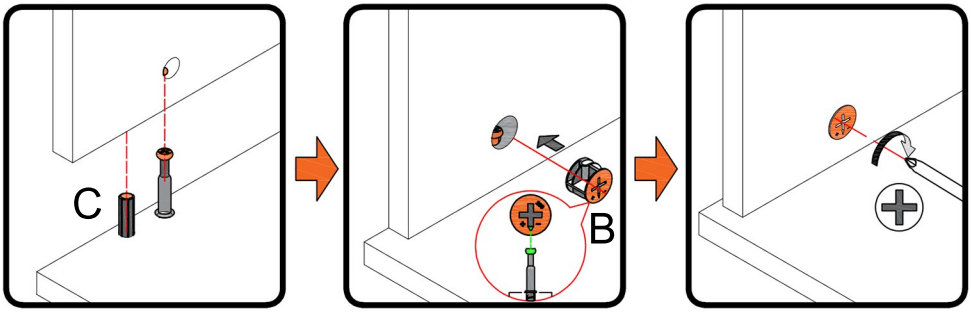

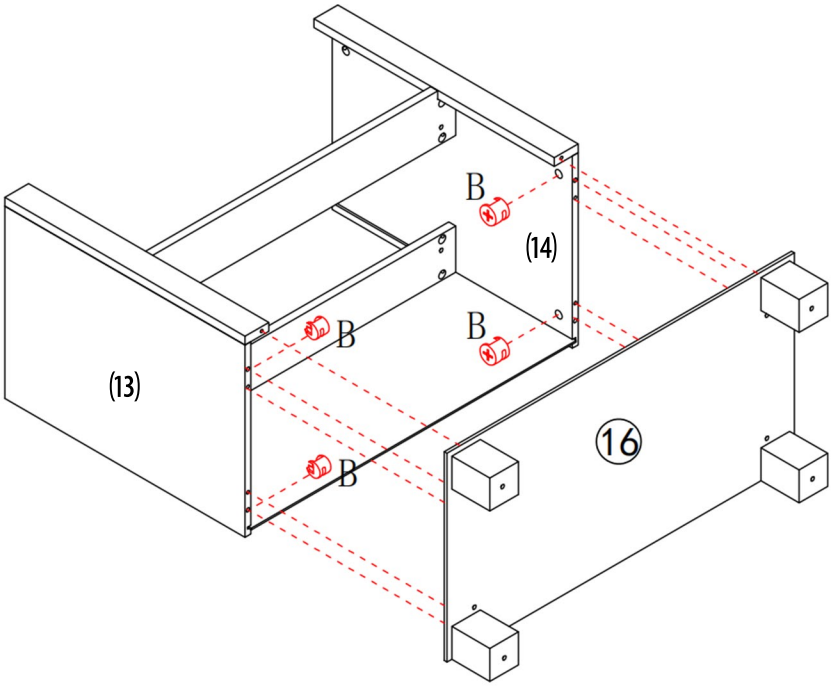



step 21 ---Install the Drawer slide (L)

Use Screws (G) to attach Drawer slide (L) to Side board (19&20) as shown.

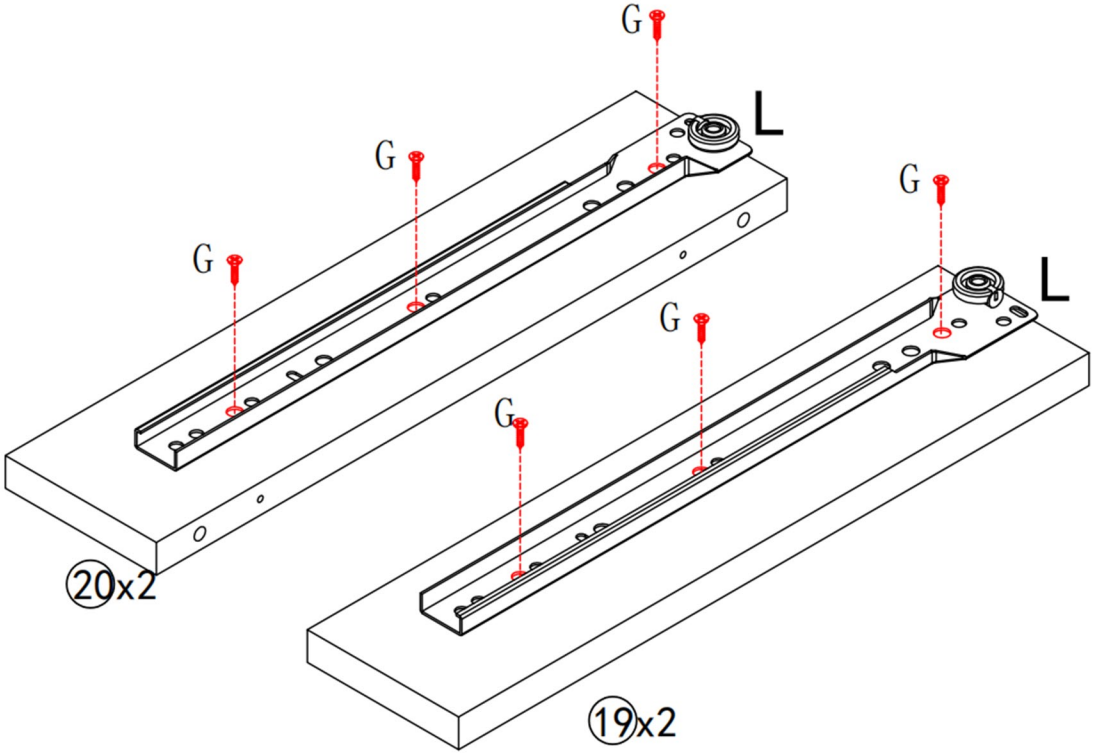





step 22 ---Install the Side board (19)

1.Insert Wooden dowel (C) into pre-drilled holes of Bottom panel (16) , Support bar (17&18),and then insert Side board (19) into it as shown.
2.Use Screws (T) to attach them,tighten it with screwdriver.

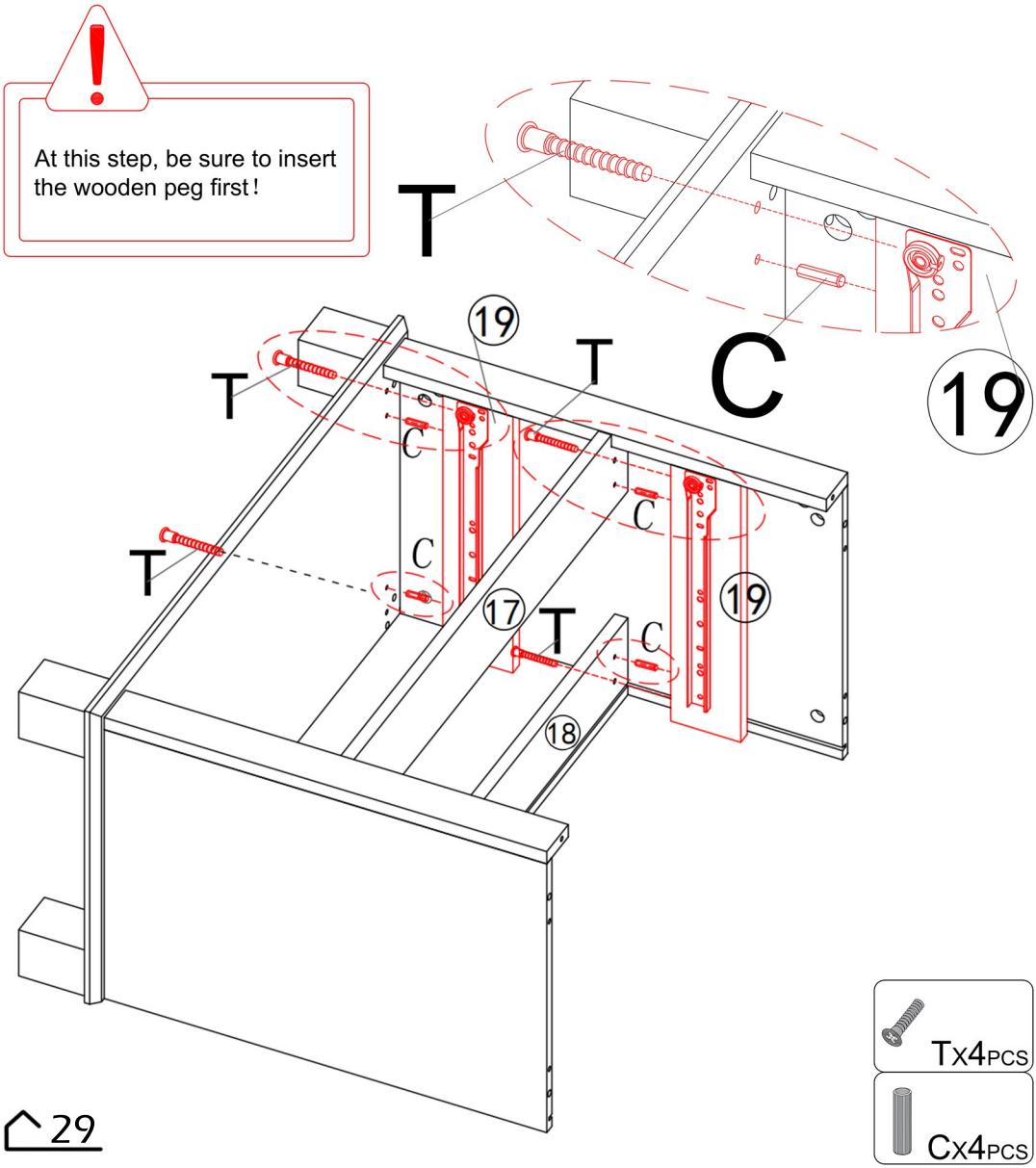

step 23 ---Install the Side board (20)

1.Insert Wooden dowel (C) into pre-drilled holes of Bottom panel (16) , Support bar (17&18),and then insert Side board (20) into it as shown.
2.Use Screws (T) to attach them,tighten it with screwdriver.

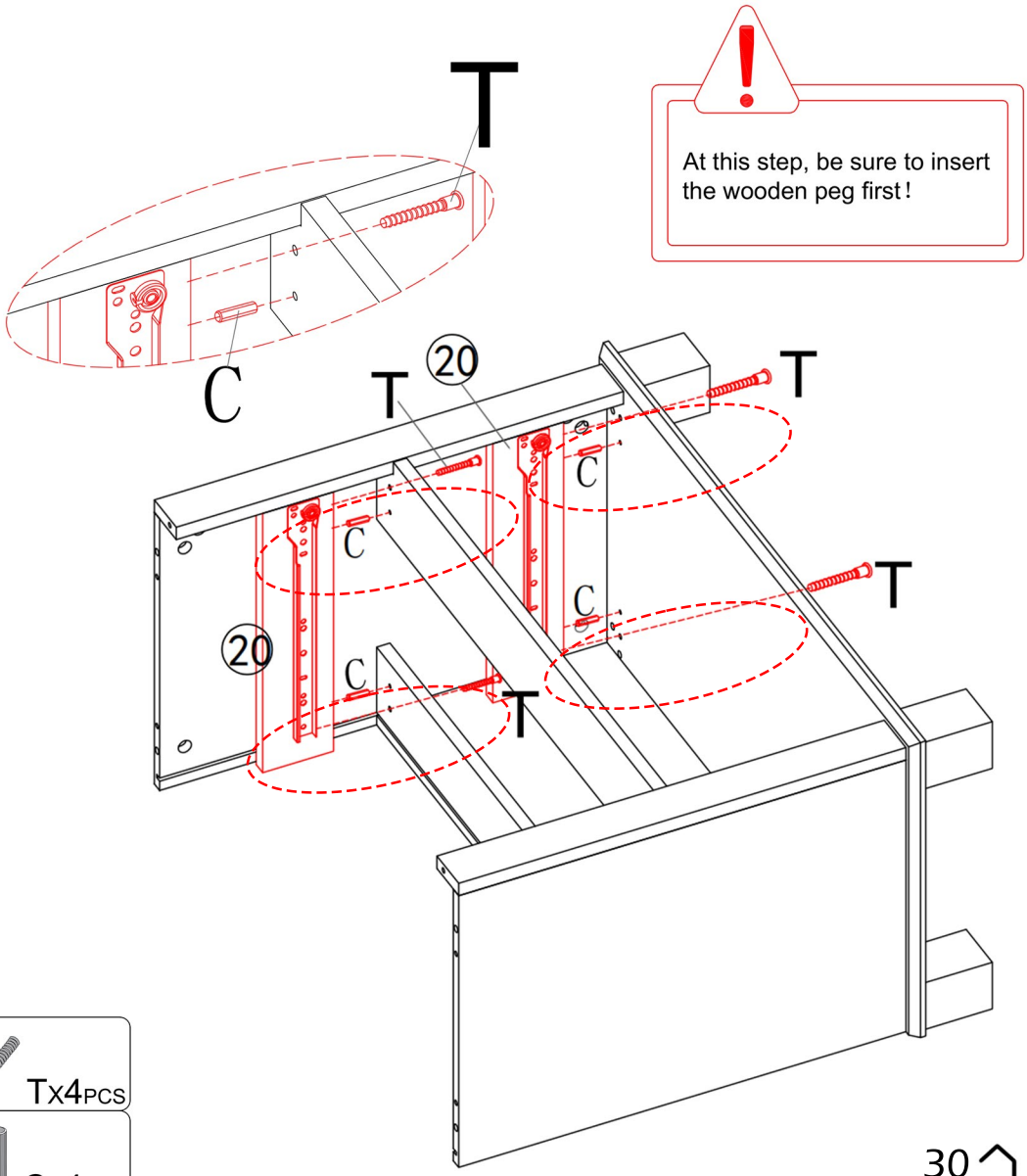



step 24 ---Install the Adjustable glide (I)

Twist the Adjustable glide (I) into Legs (21).

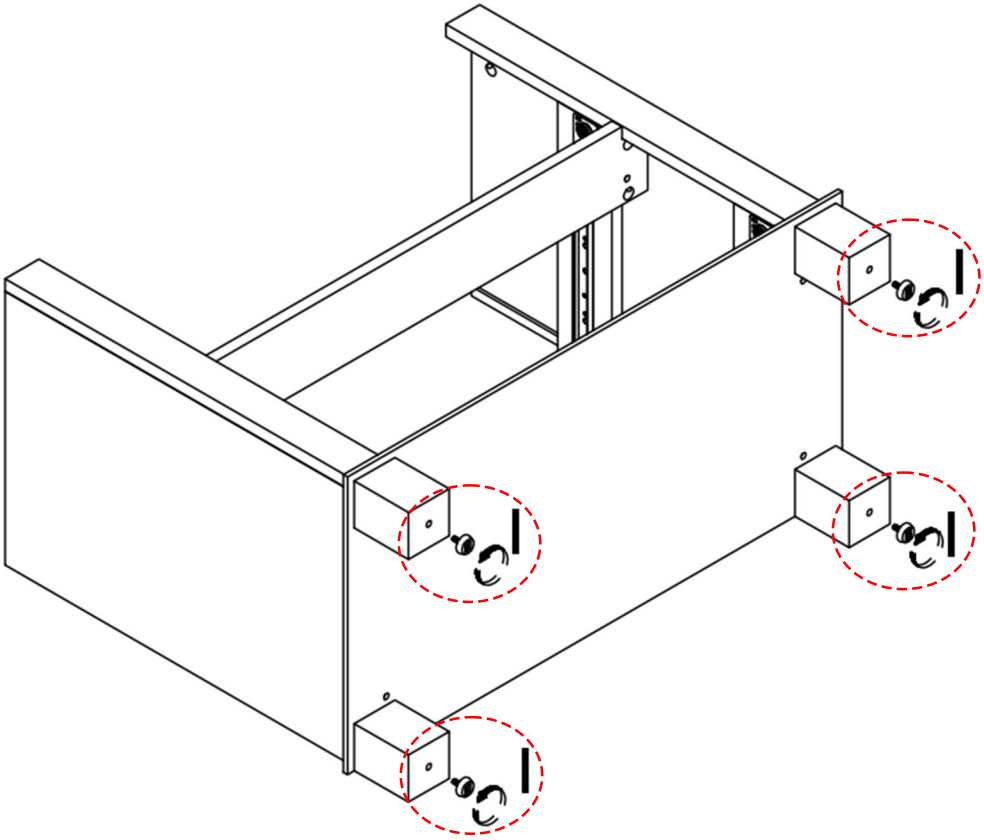



step 25 ---Install the Back panel (10)

Slide the Back panel (10) into the grooves along the Side panel (13&14).
Ensure it fits flush and aligns tightly with the internal channels.
Insert wooden dowel (C) into it as shown.

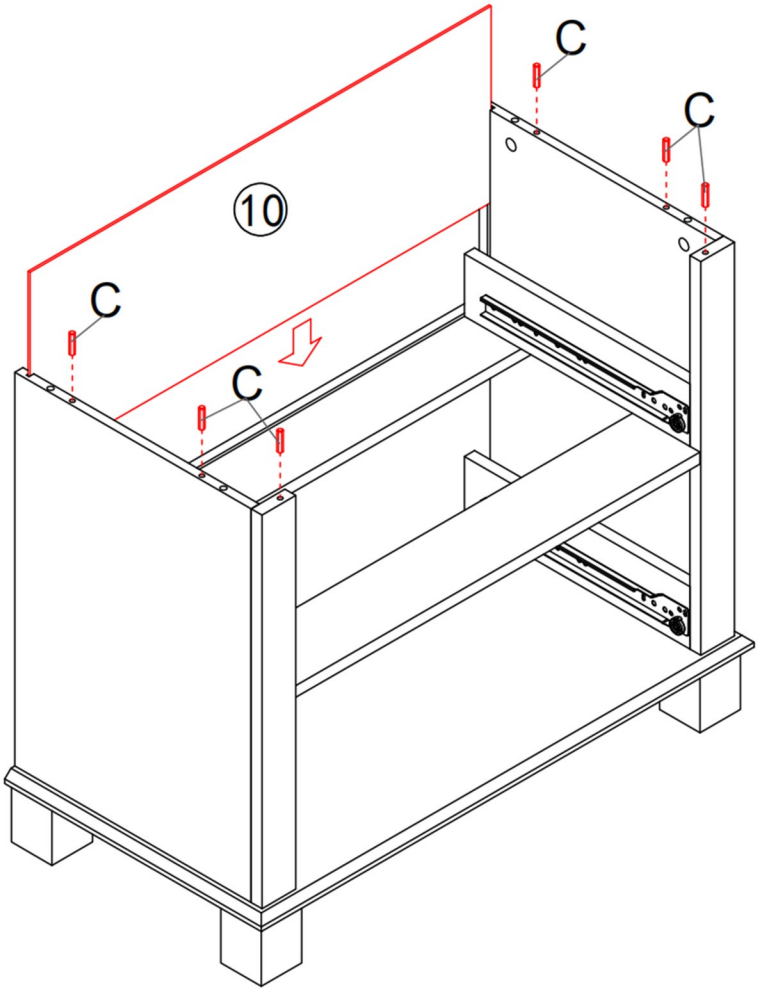



step 26---Install the Pre-assembly part at step 9

1.Insert Cam nut (B) into the pre-drilled holes of Side panel (13&14),tighten it with screwdriver.

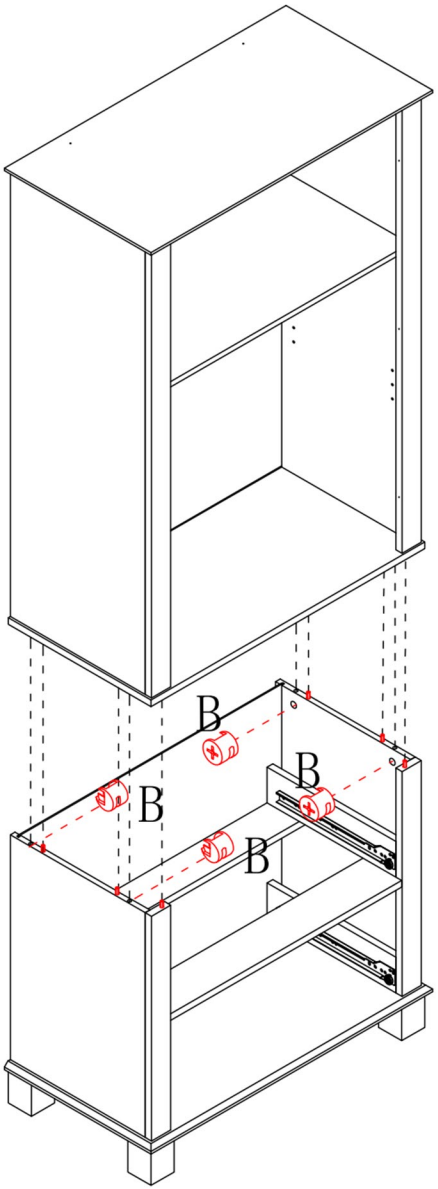



step 27 ---Install the Backplate buckle (E)

Use screw (P) to attach Backplate buckle (E) to Back panel (8&9&10) as shown,tighten it with screwdriver.

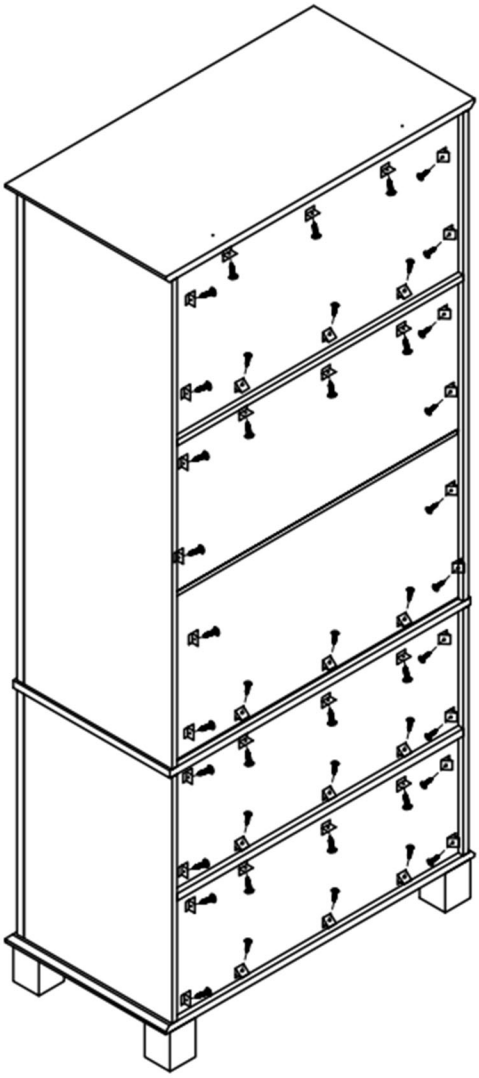

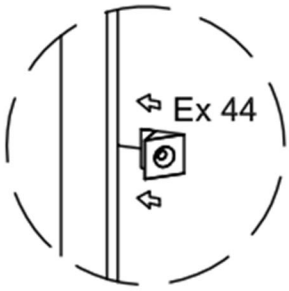

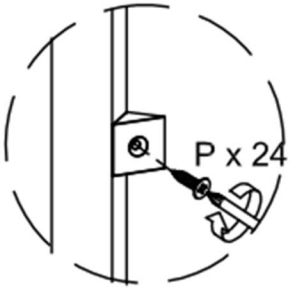

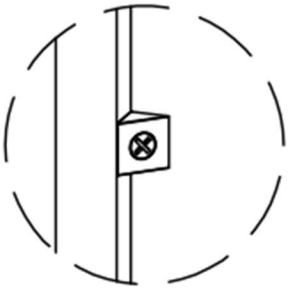





step 28 ---Install drawer

1.Use screws (H) to attach Drawer side panel (23&24) to Drawer back panel (25),make sure all holes aligned, tighten it with screwdriver.
2.Use screws (H) to attach Drawer support board (27) to Drawer back panel (25),make sure all holes aligned, tighten it with screwdriver.

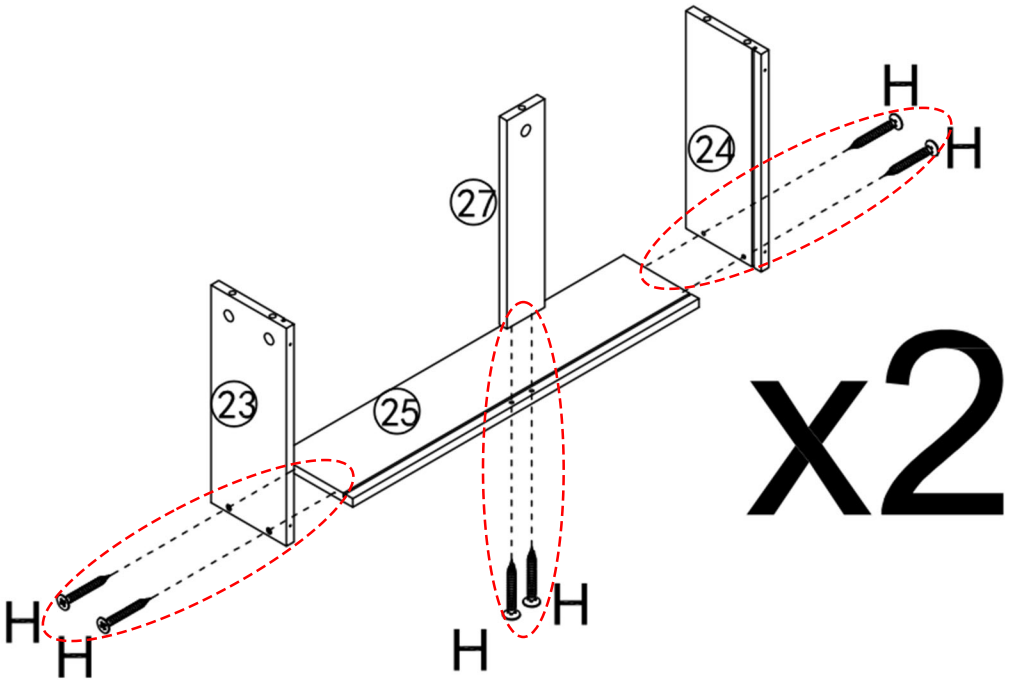

HX12PCS

step 29 ---Install drawer

Slide the Drawer bottom panel (26) into the grooves along the Drawer Side panel (23&24).
Ensure it fits flush and aligns tightly with the internal channels.

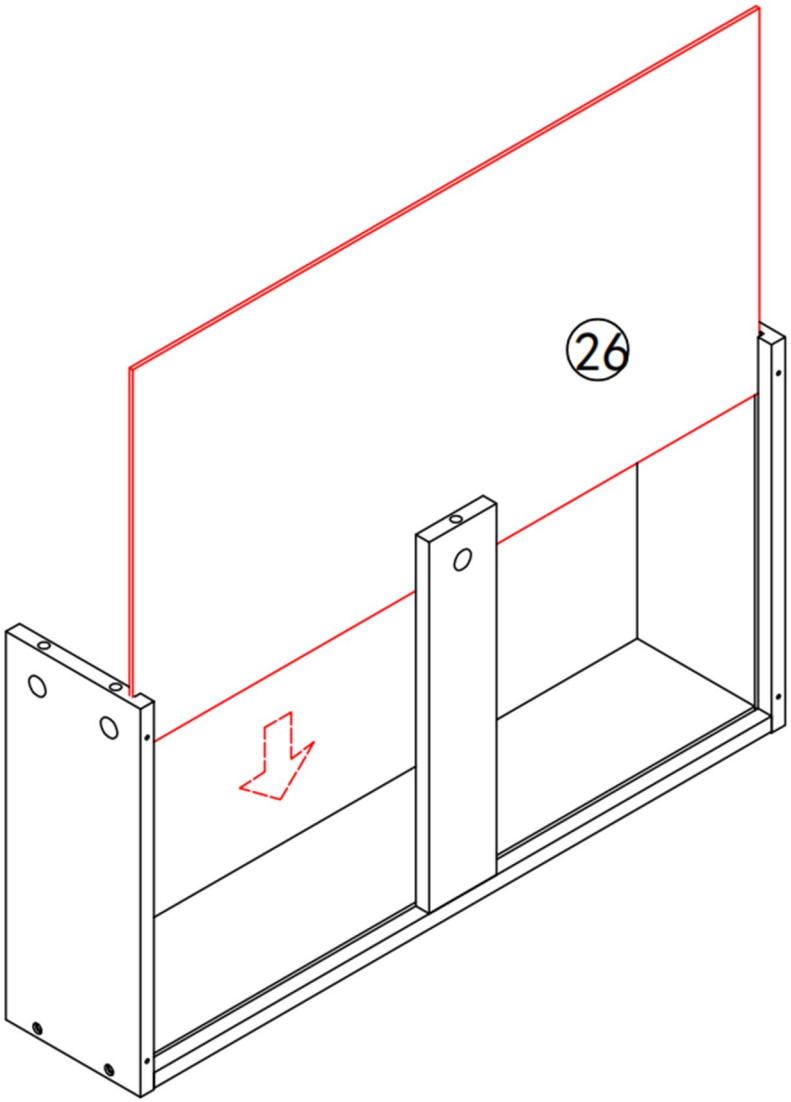

step 30 ---Install drawer

1.Insert cam bolt (A) into pre-drilled holes of Drawer panel (22) ,tighten it with screwdriver.
2.And then insert Drawer panel (22) into it as shown.
3.Insert Cam nut (B) into the pre-drilled holes of Drawer side panel (23&24), tighten it with screwdriver.

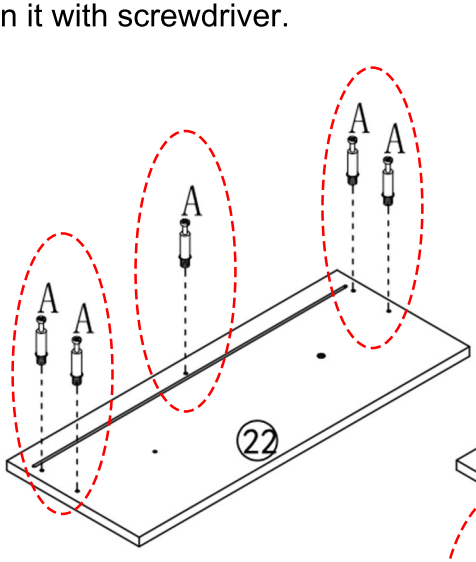

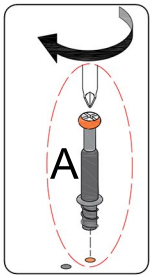

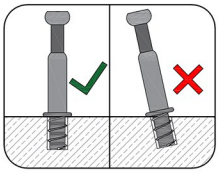

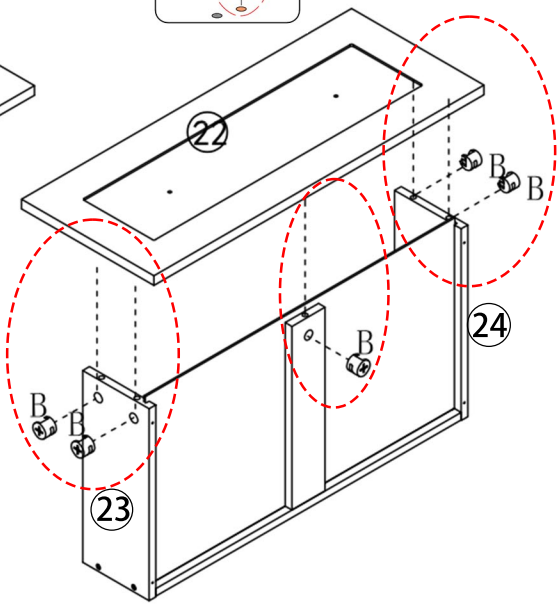

x2

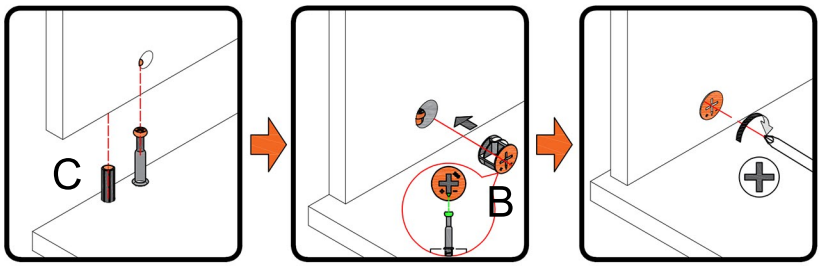





step 31---Install Drawer slide (L)

1.Use screws (G) to attach Drawer slide(L) to Drawer side panel (23&24), make sure all holes aligned, tighten them with screwdriver.

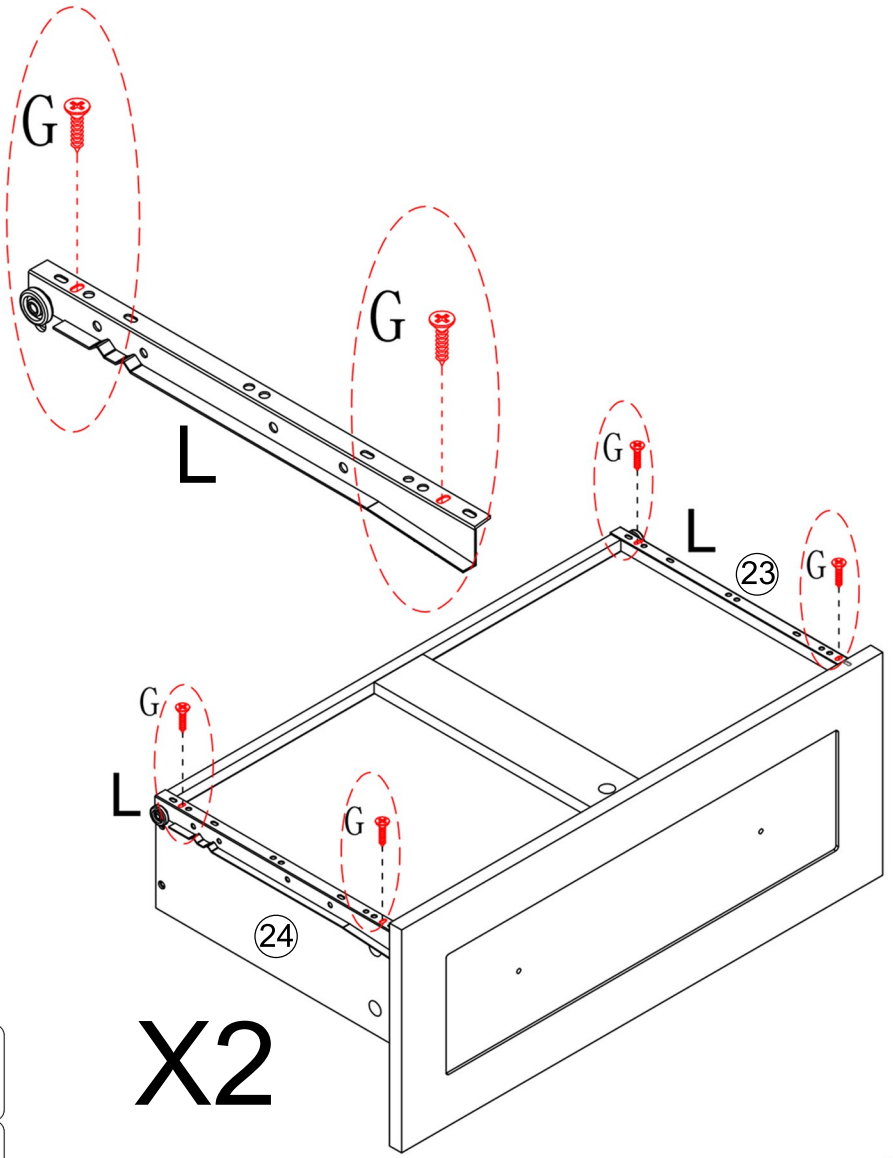





step 32 ---Install the handle (M)

1.Use screws (O) to attach Handle (M) to Drawer front (22),tighten it with screwdriver.

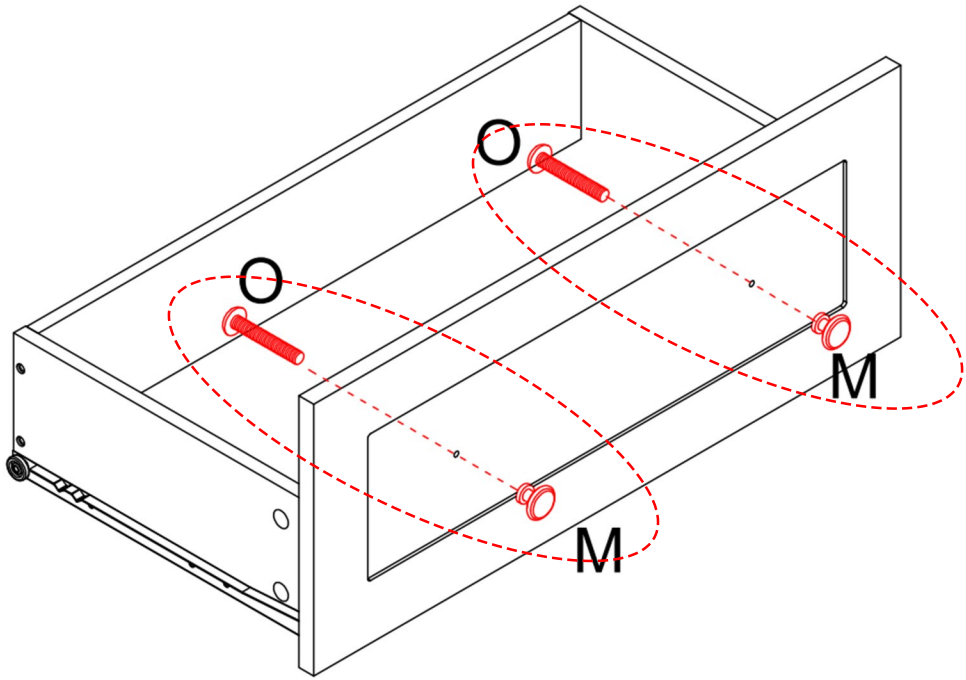





step 33 ---Install the Drawer

Install the Drawer.

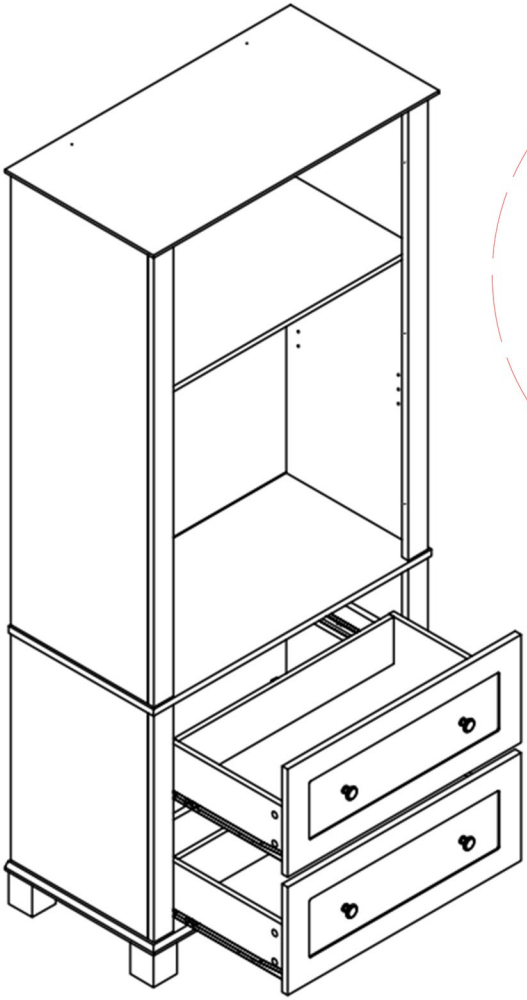

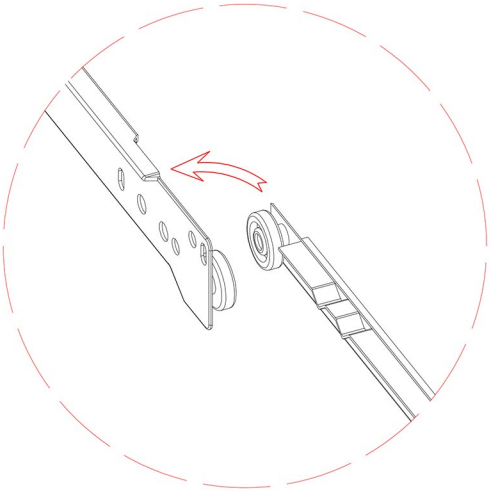

step 34 ---Install the Wine glass rack

1.Insert cam bolt (A) into pre-drilled holes of Wine glass rack (28&29) , tighten it with screwdriver.
2.Insert Side board (30) into it as shown.
3.Insert Cam nut (B) into the pre-drilled holes of Side board (30),tighten it with screwdriver.

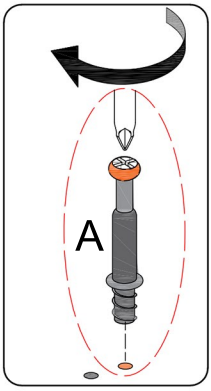

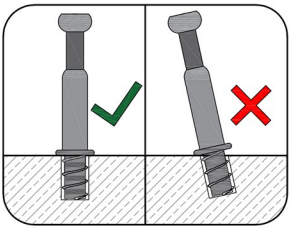

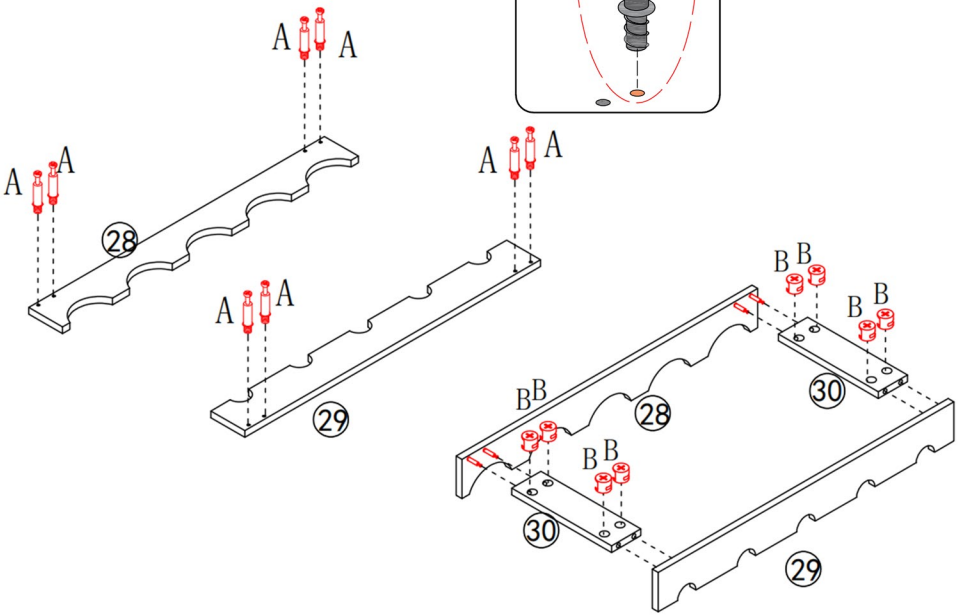

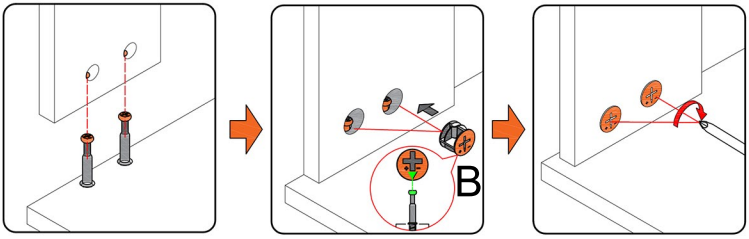

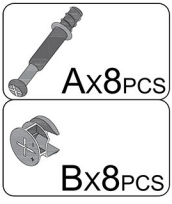

step 35 ---Install the Shelf board (7)

1.Insert Shelf support (K) into it as shown.
2.Insert shelf board (7) into it as shown.

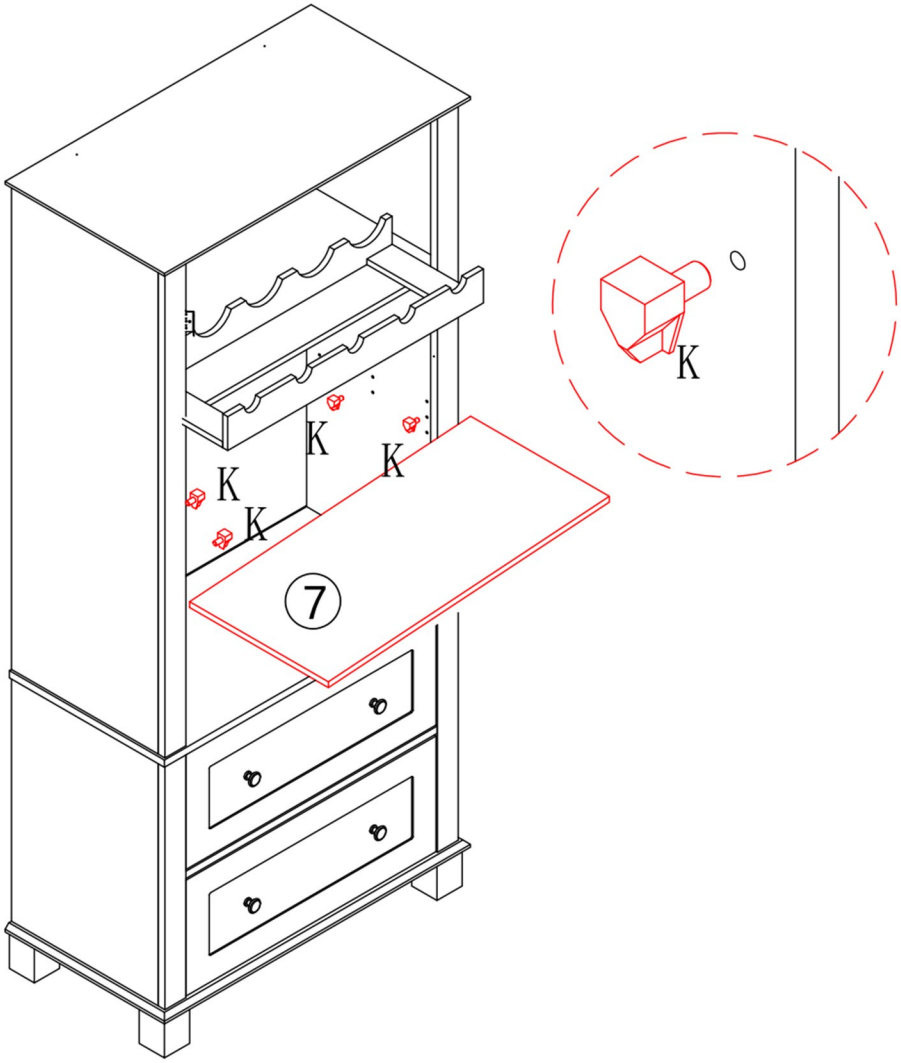



step 36 ---Install the Hinge (J)&Magnetic iron sheet (S)&Handle (M)

1.Use screws (G) to attach Hinge (J) and Magnetic iron sheet (S) to Door (12), tighten it with screwdriver.
2.Use screw (Q) to attach Handle (M) to door, tighten it with screwdriver.

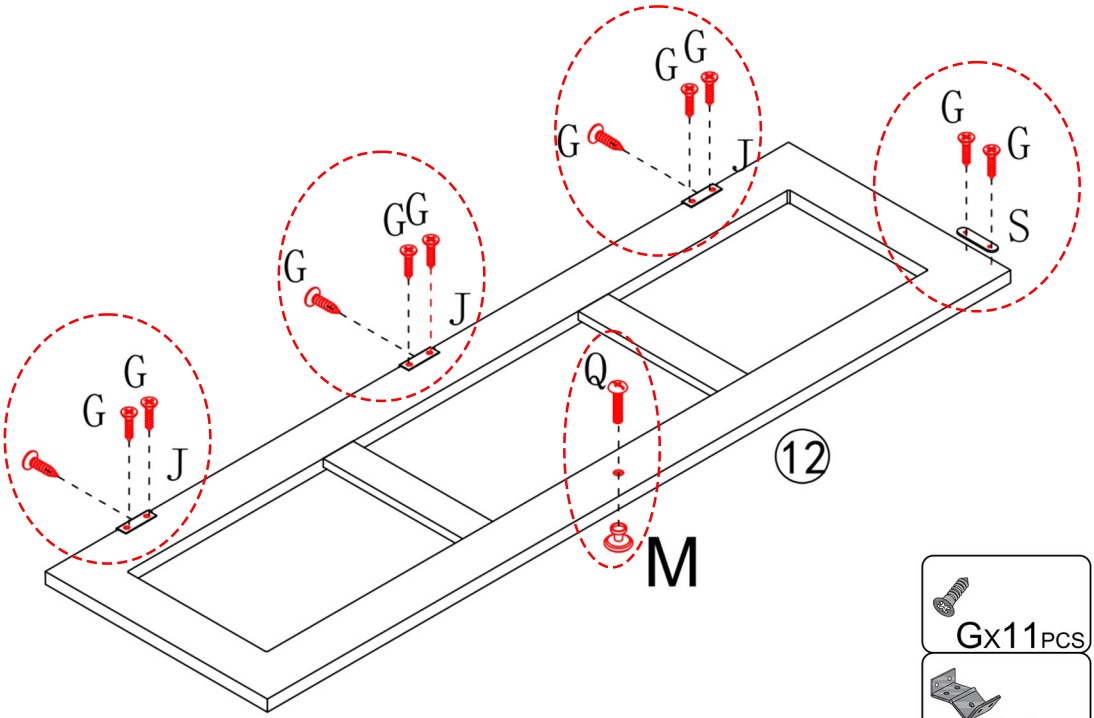







step 37 ---Install the Hinge (J) & Magnetic iron sheet (S)&Handle (M)

1.Use screws (G) to attach Hinge (J) and Magnetic iron sheet (S) to Door (12), tighten it with screwdriver.
2.Use screw (Q) to attach Handle (M) to door, tighten it with screwdriver.

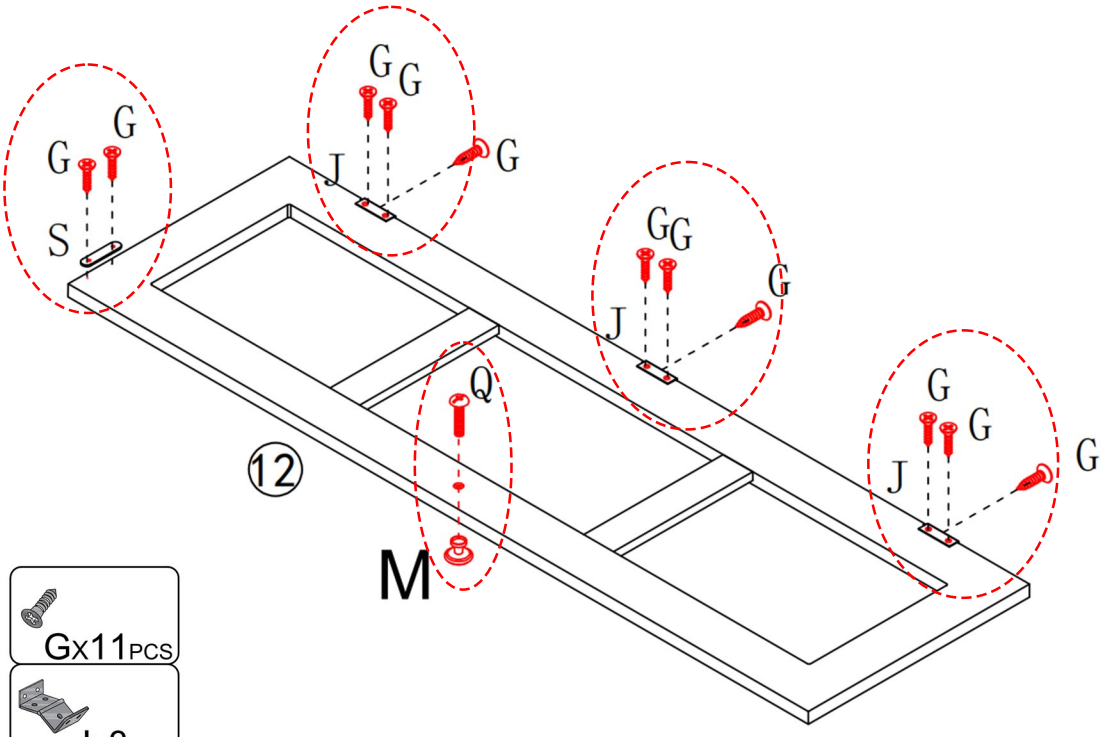

GX11PCS

JX3PCS


SX2PCS


MX1PCS


NX1PCS

step 38 ---Install the Door

Use screws (G) to attach Hinge (J) to Support bar (4), tighten it with screwdriver.

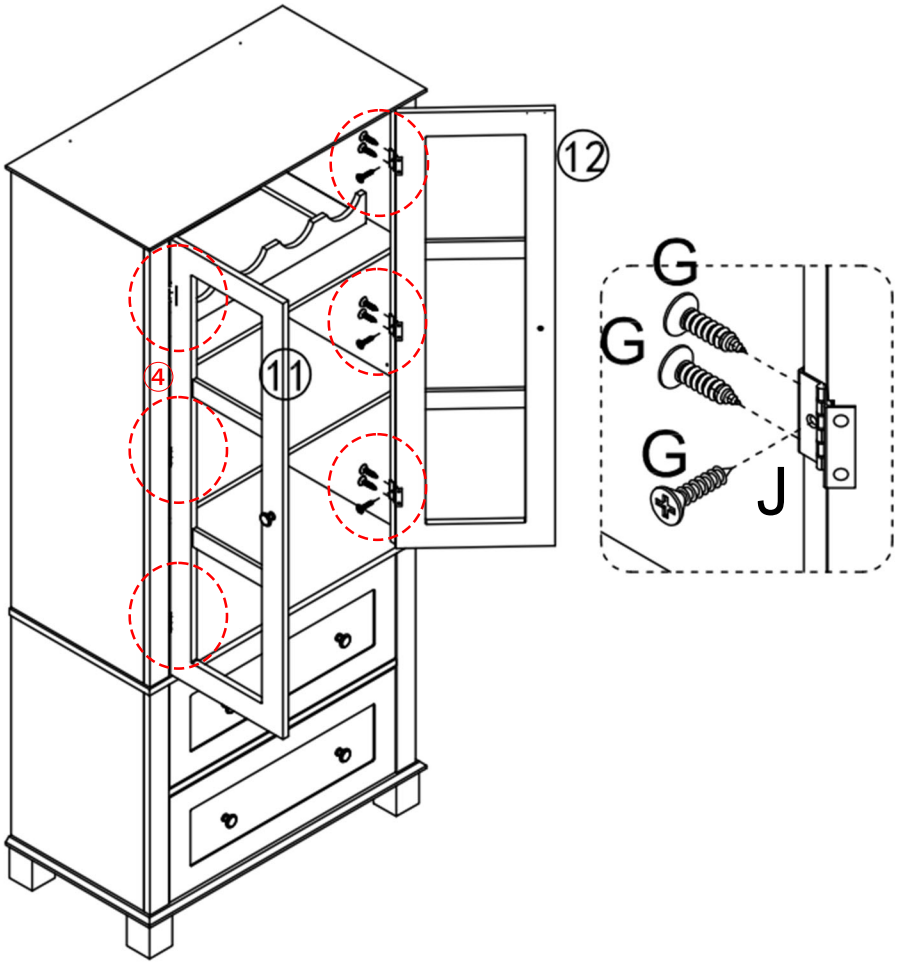

GX24PCS

step 39 ---Install the Anti-falling hardware

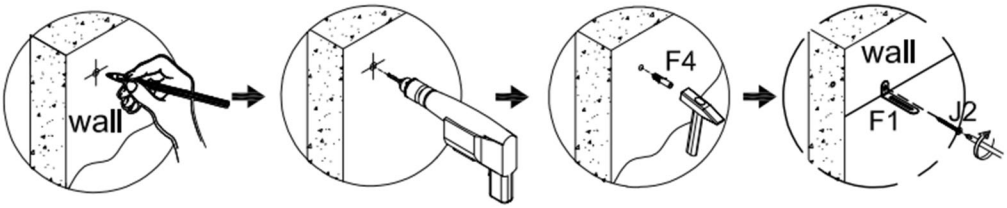

In order to fix the cabinet to the wall.
First move the cabinet against the wall, then hold the Iron Plates (F1) near the back-top edge of the cabinet to determine position, and mark the positions on the wall with a pencil.Use a drill or powertool to make holes at the marked spots (For at least 30 mm depth).Hammer the Wall Plugs (F4) into the drilled holes until flush.Insert the screw (F2) through Iron Plate (F1) and tighten into the Wall Plugs (F4).

