ASSEMBLY INSTRUCTIONS

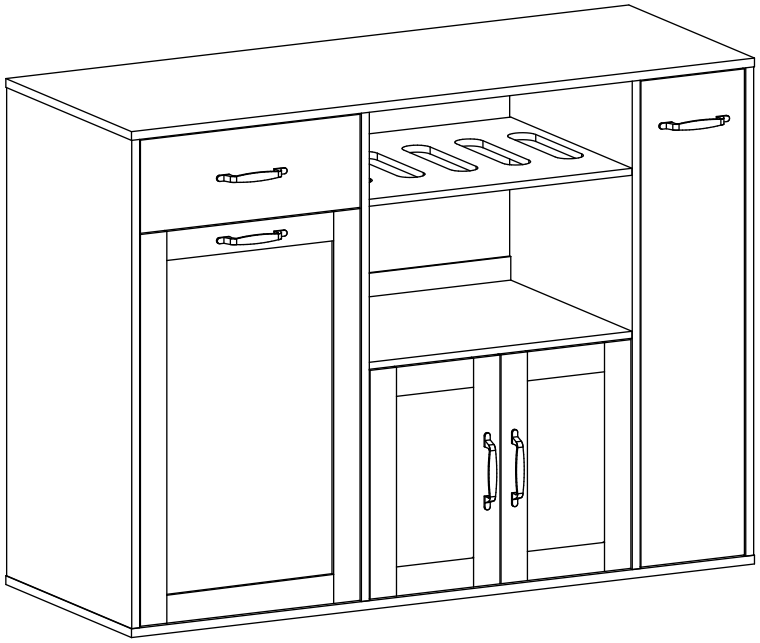

A M6*35mm 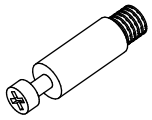 x54	B M15*12mm  x8	C M15*10mm  x46	D M8*30mm 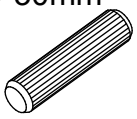 x16
E M6*30mm 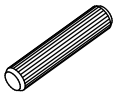 x12	F M7*38mm  x8	G M5*38mm 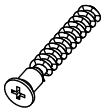 x10	H M3.5*12mm 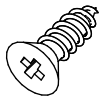 x68
I M3*14mm 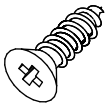 x2	J M4*16mm  x6	K M4*20mm  x4	L 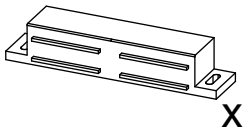 x1
M 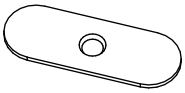 x2	N 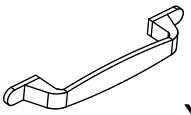 x5	O M6*12mm  x4	P M4*35mm  x8
Q 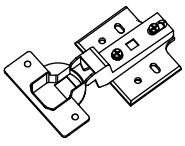 x4	R 400mm 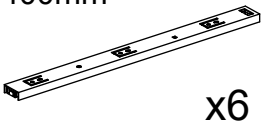 x6	S M3.5*10mm  x2	T 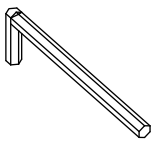 x1
U 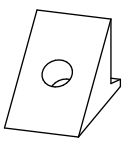 x22	V M3.5*16mm  x22	W  x8	X 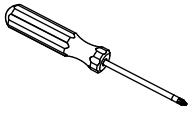 x1
Y 300mm 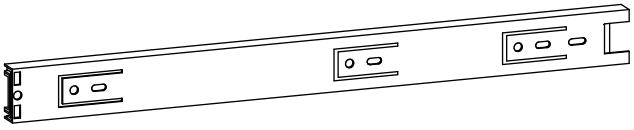 x2			

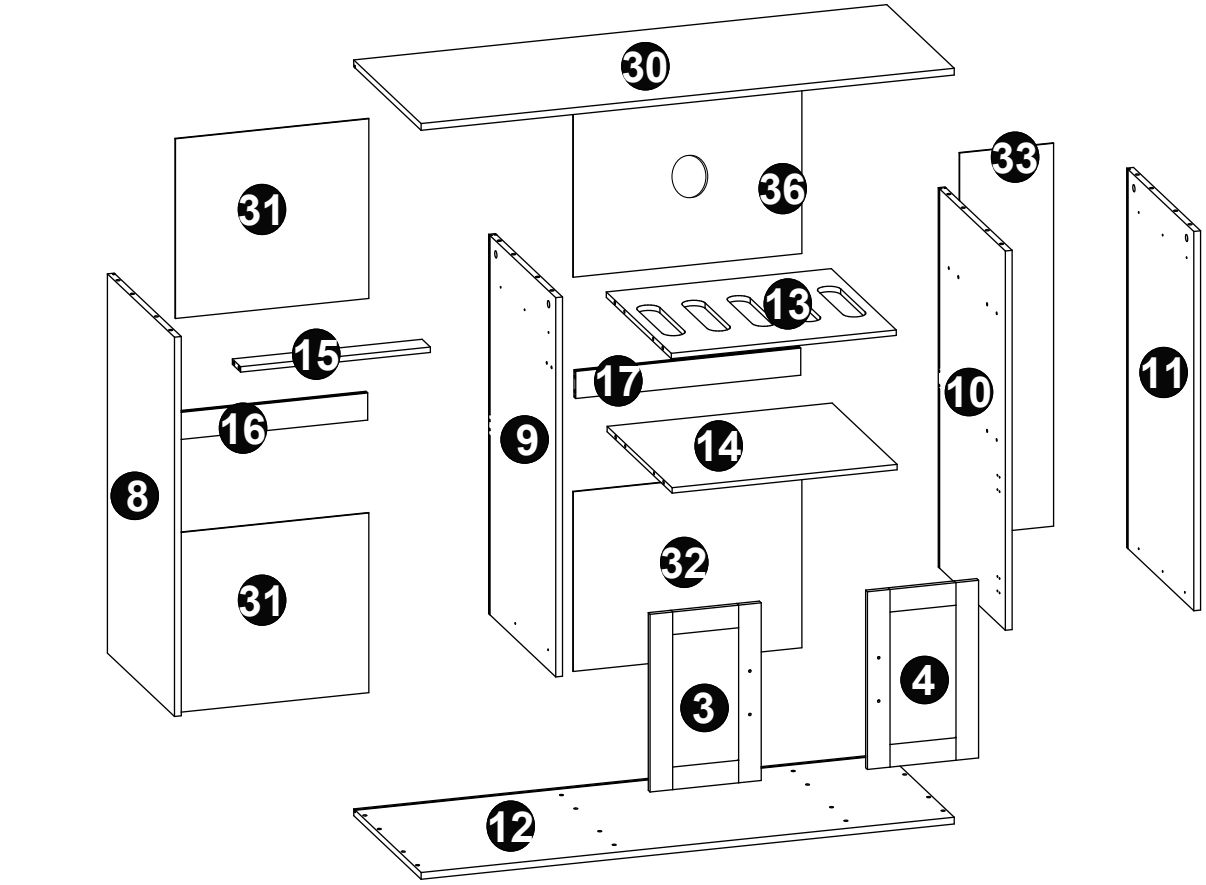
30
31
36
33
13
15
17
10
11
16
9
14
8
31
32
3
4
12

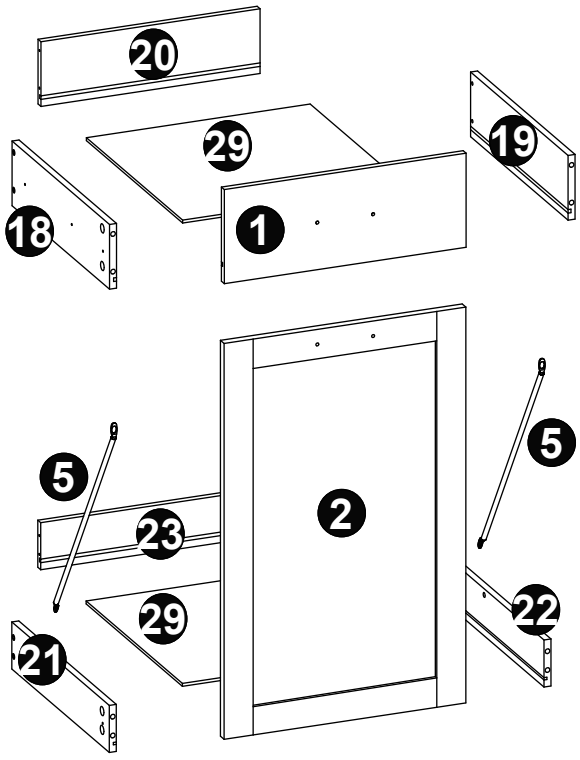
20
29
19
18
1
5
5
2
23
29
22
21

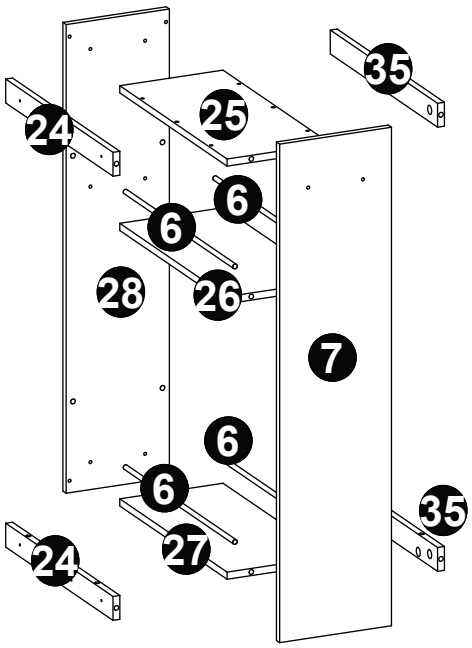
35
25
24
6
6
28
26
7
6
6
35
27
24

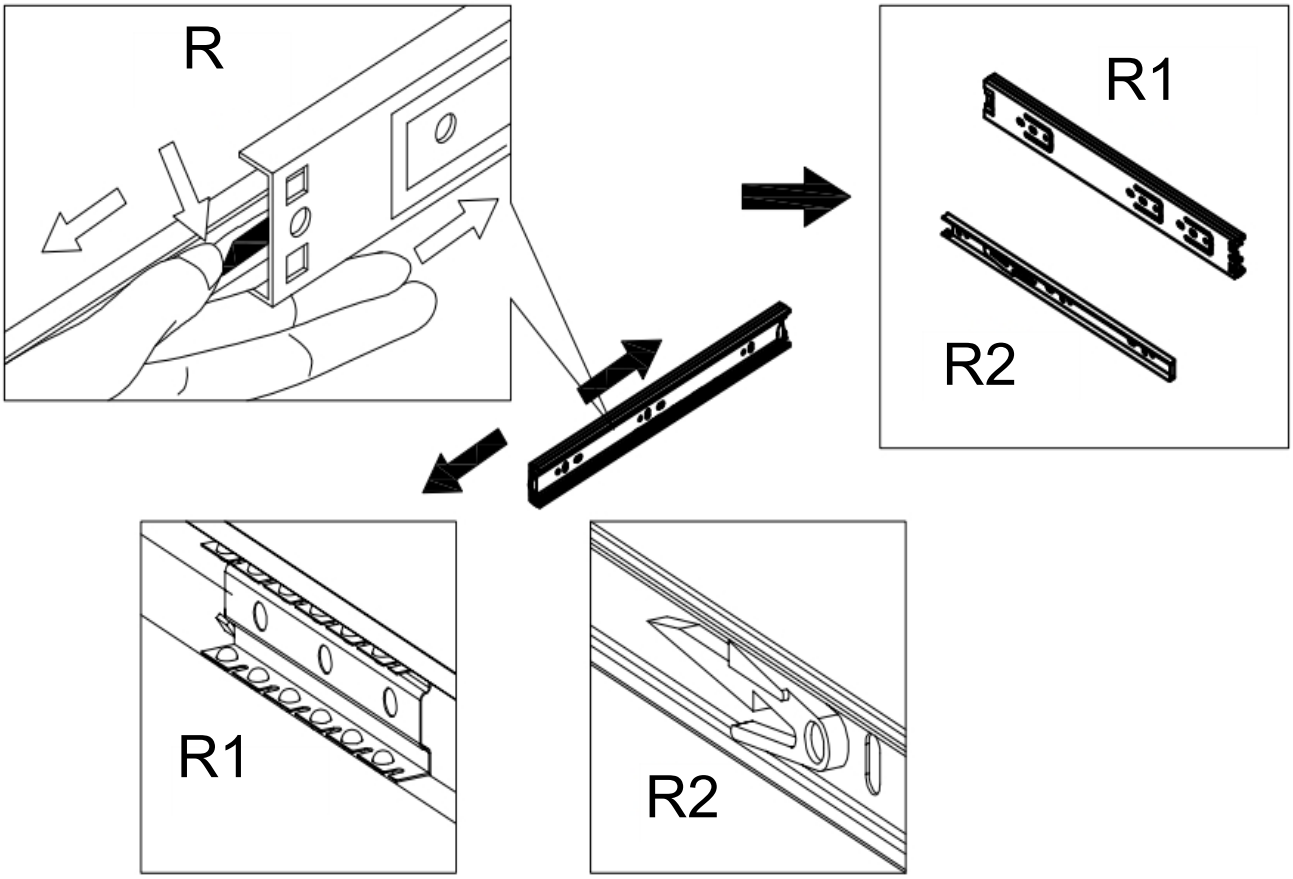
R
R1
R2
R1
R2

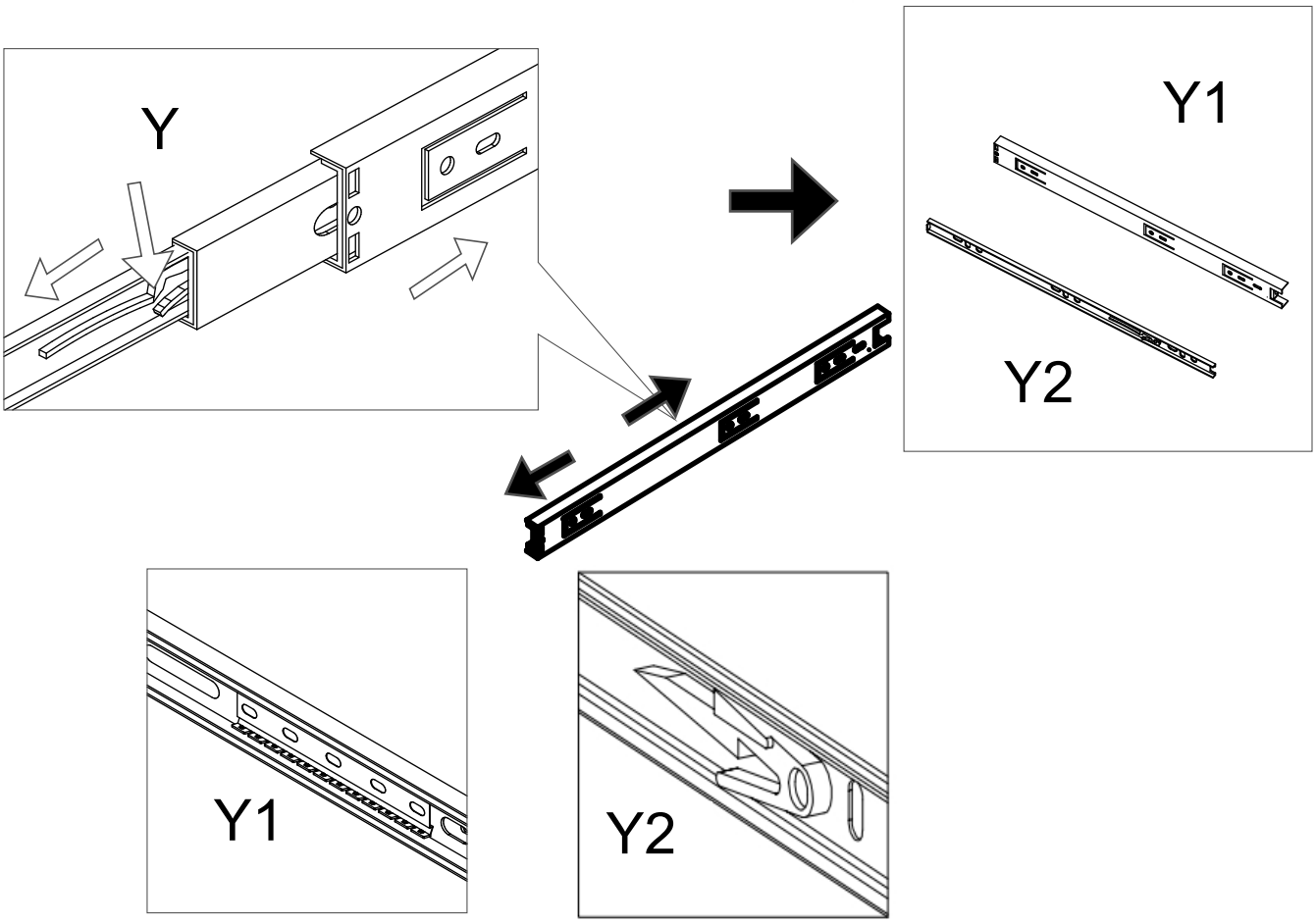
Y
Y1
Y2
Y1
Y2

STEP 1

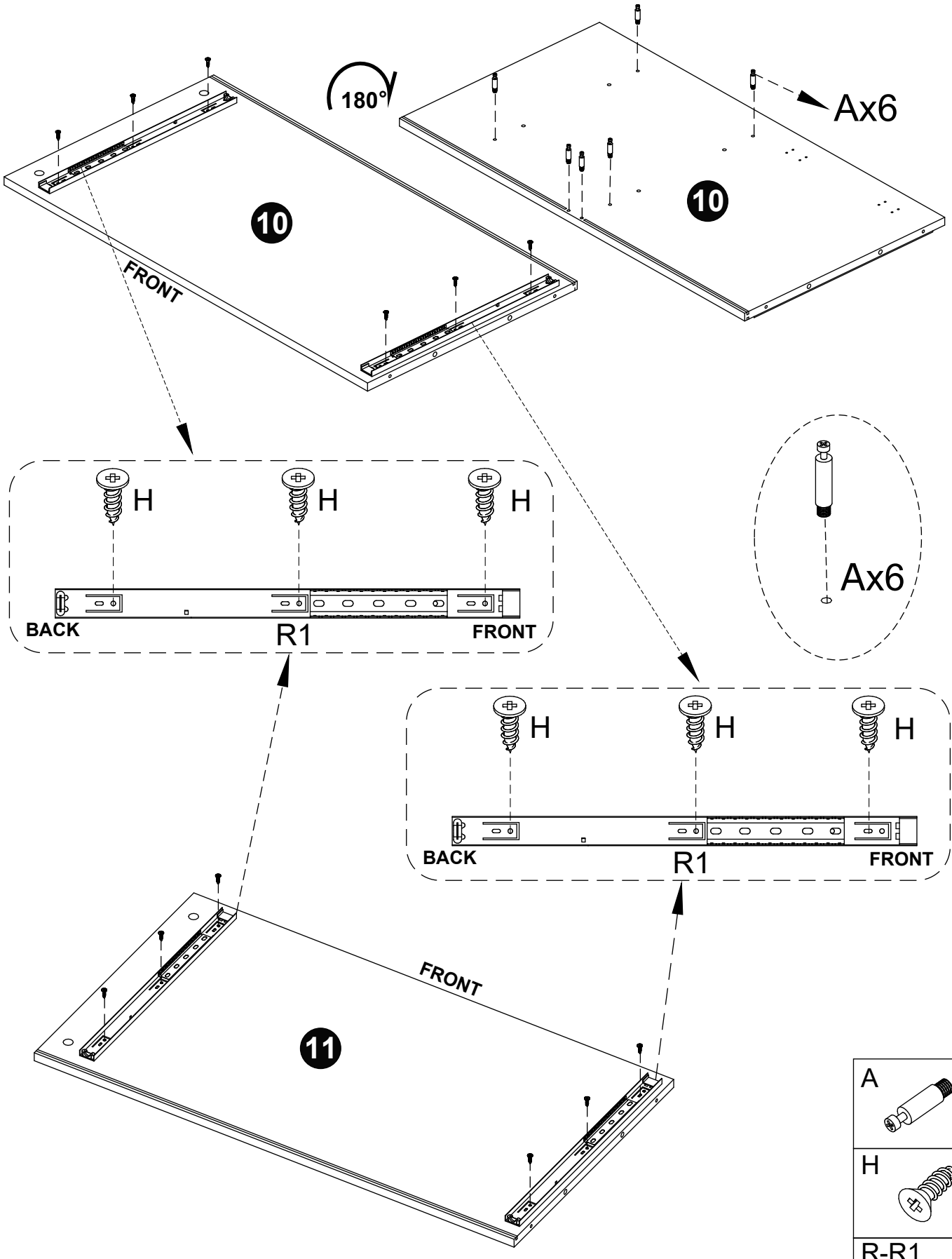

A	x6
H	x12
R-R1	x4

STEP 2

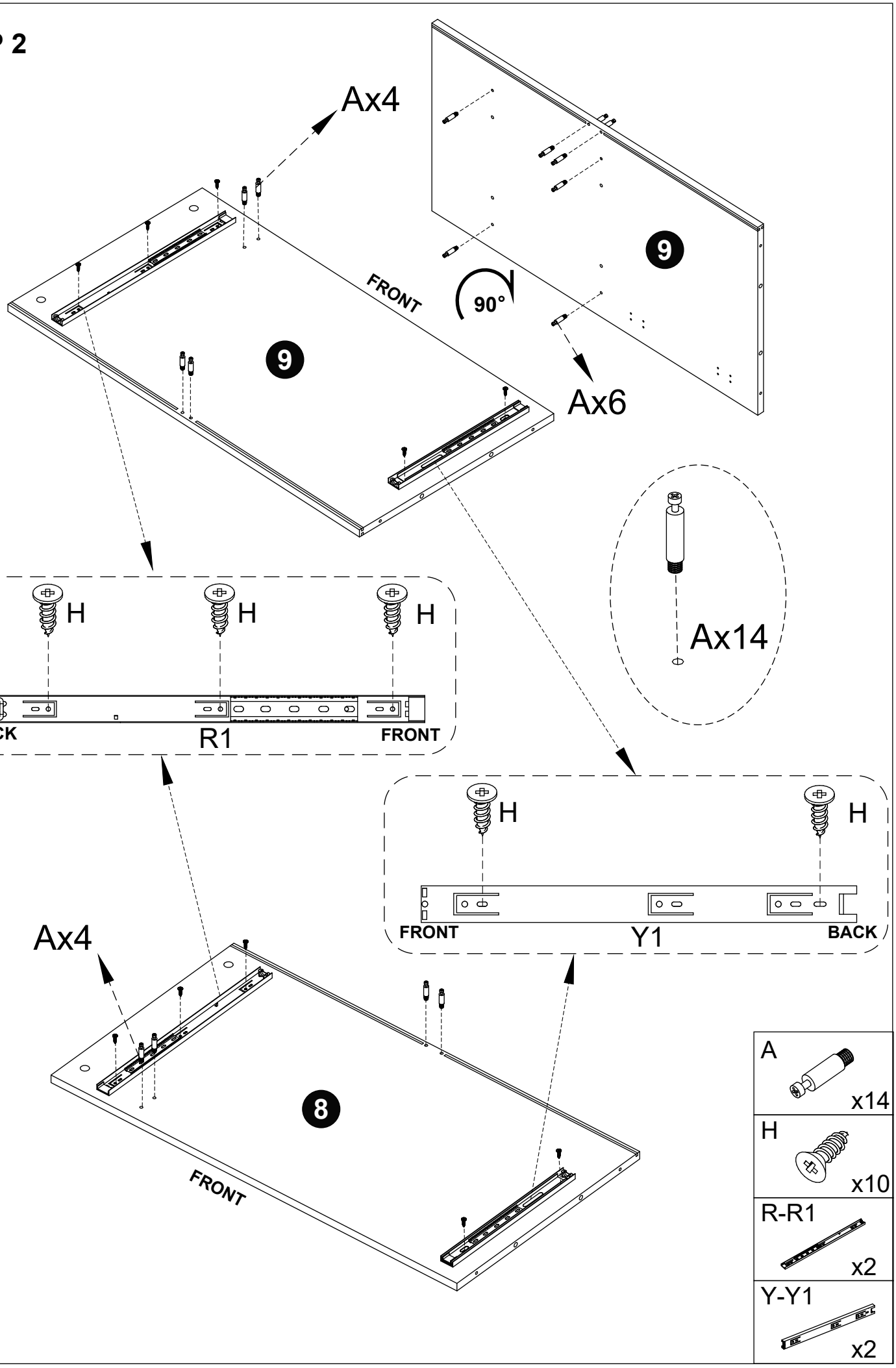

A	x14
H	x10
R-R1	x2
Y-Y1	x2

STEP 3

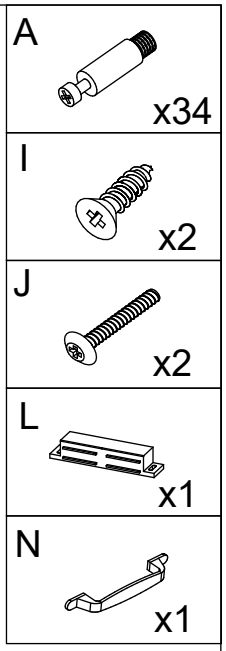
A
x34
I
x2
J
x2
L
x1
N
x1

Ax8
30
Ax4
27
25
Ax4
1
Ax4
2
Ax34
Ax4
7
90°
7
J
N
J
14
L
Ix2
Ax10

STEP 4

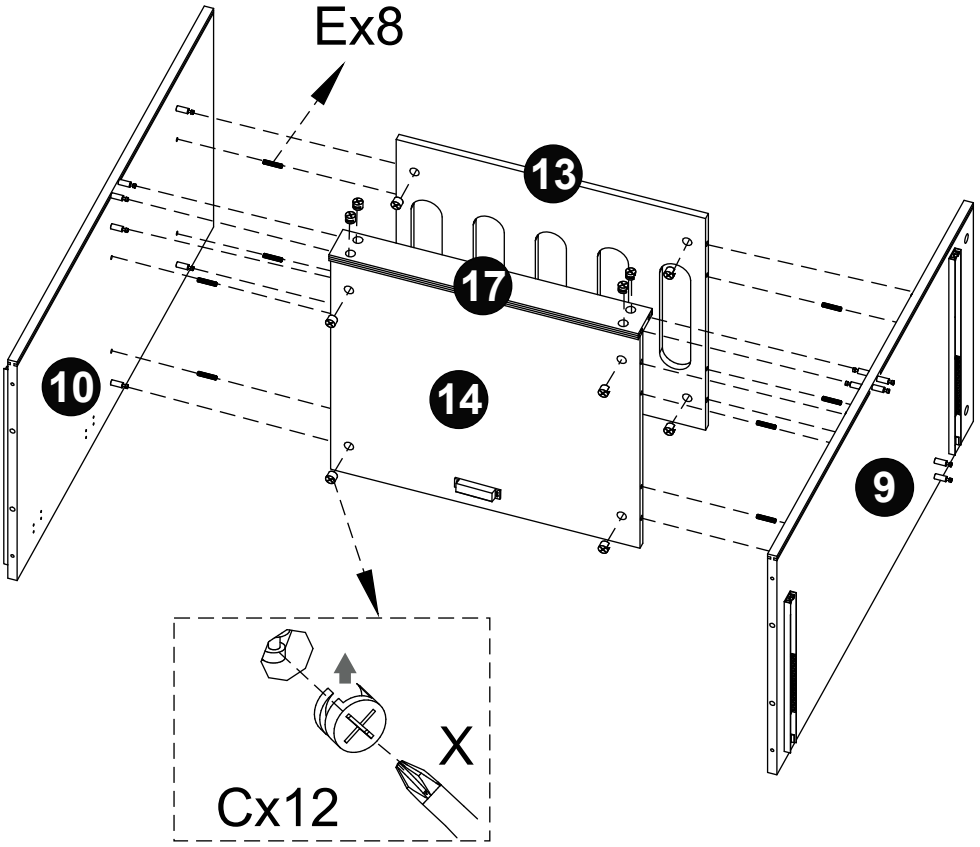

C	E
 x12	 x8

STEP 5

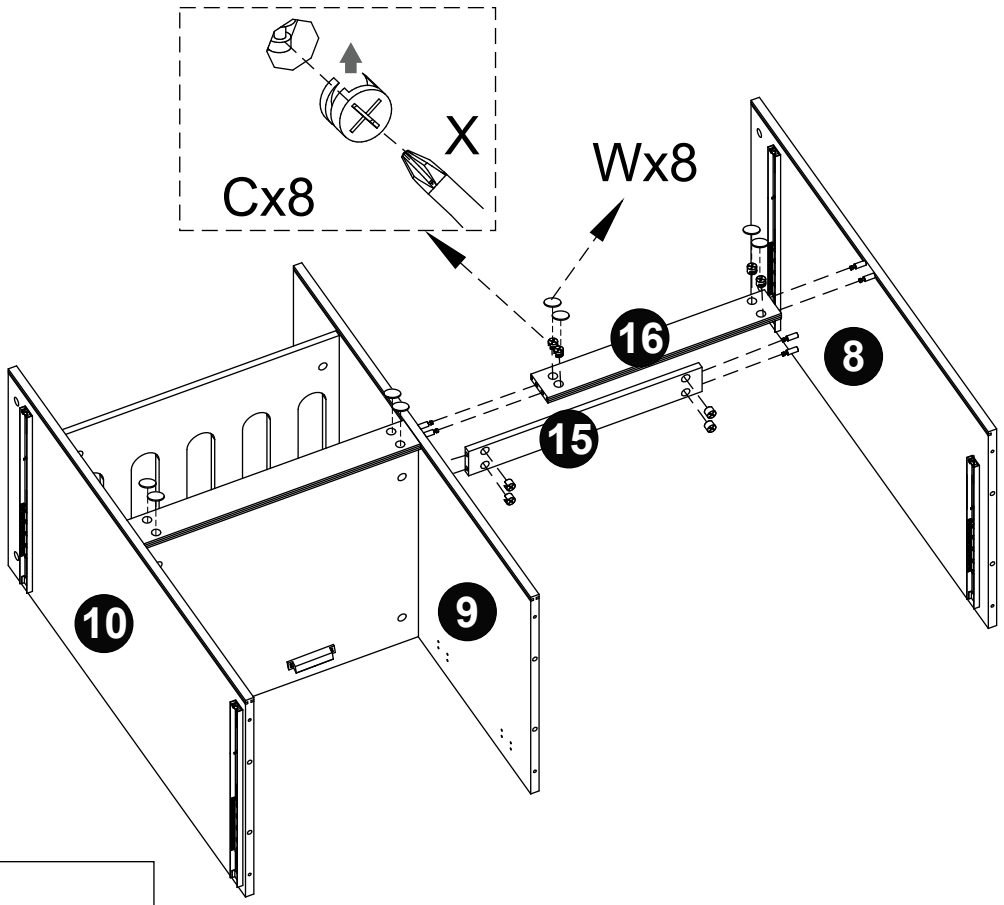

C	W
 x8	 x8

STEP 6

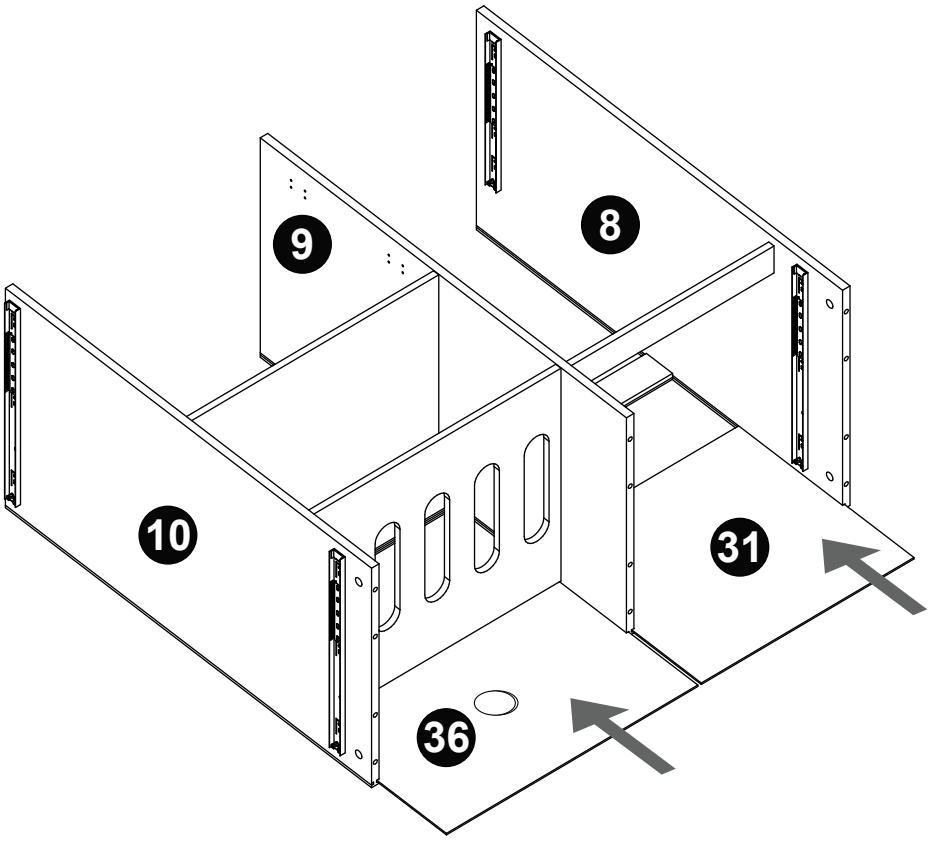

STEP 7

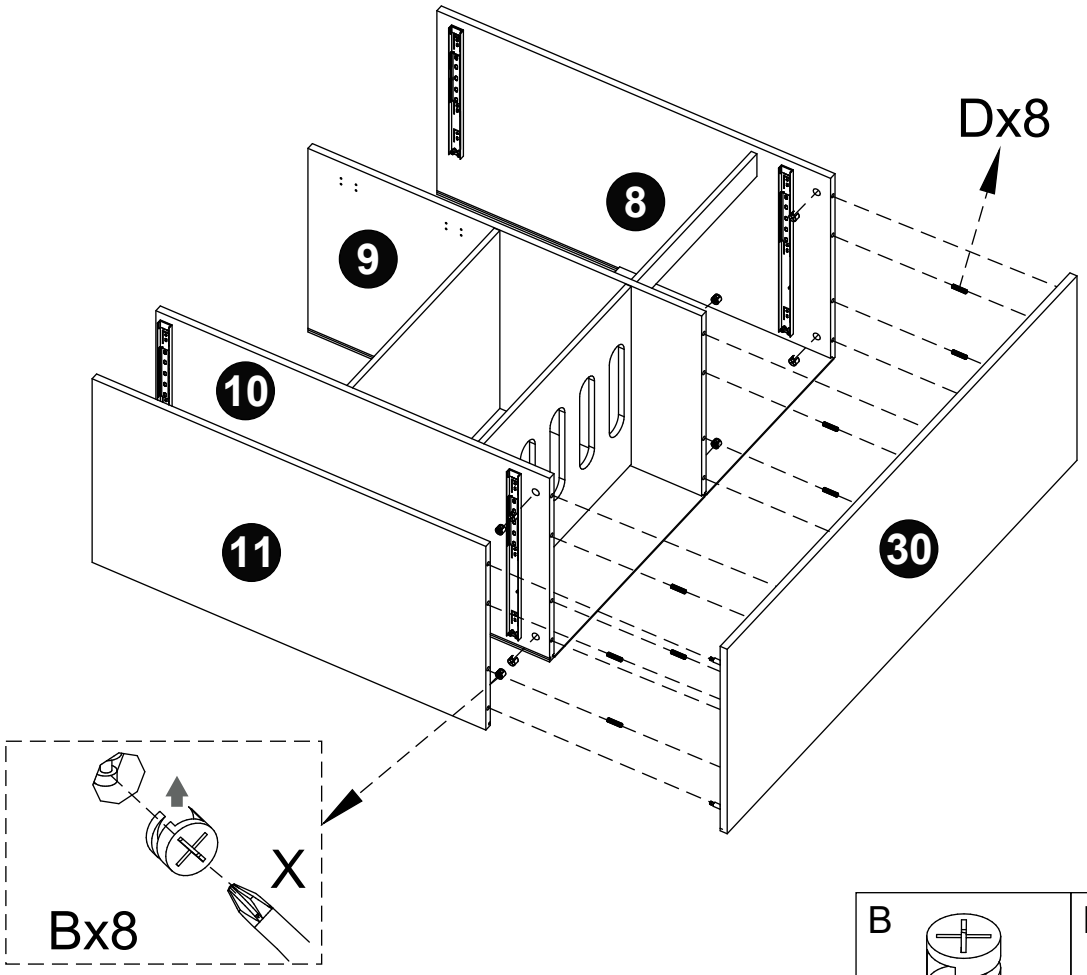

B	D
x8	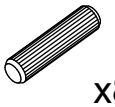 x8

STEP 8

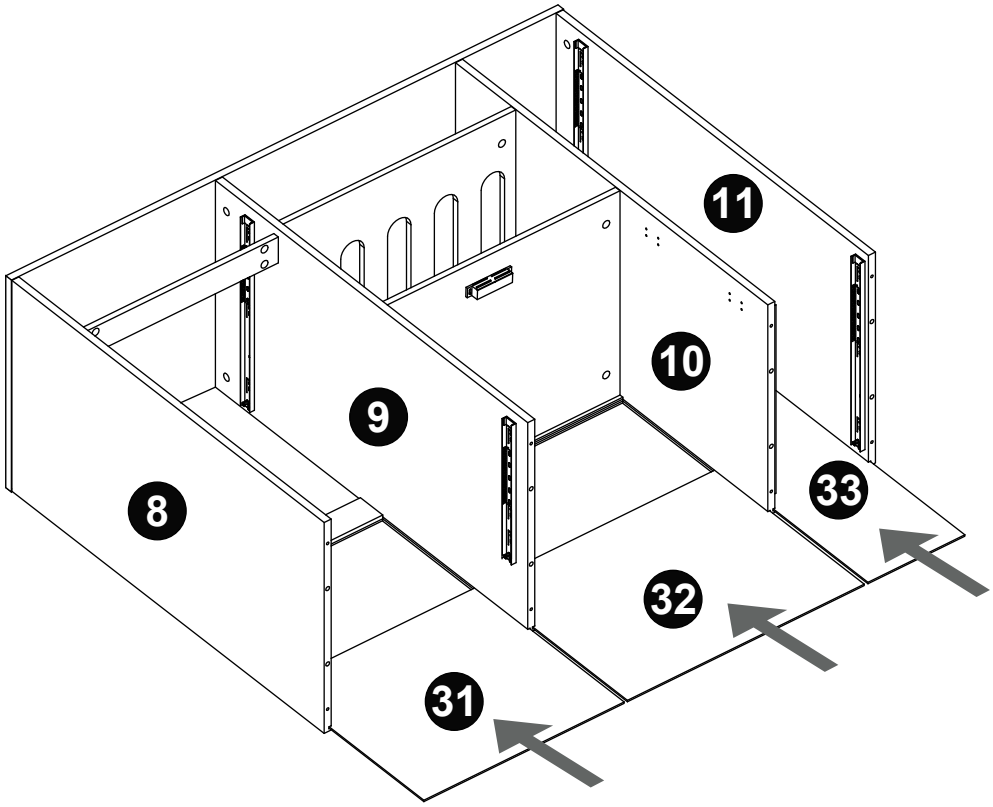

STEP 9

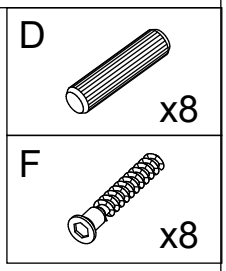

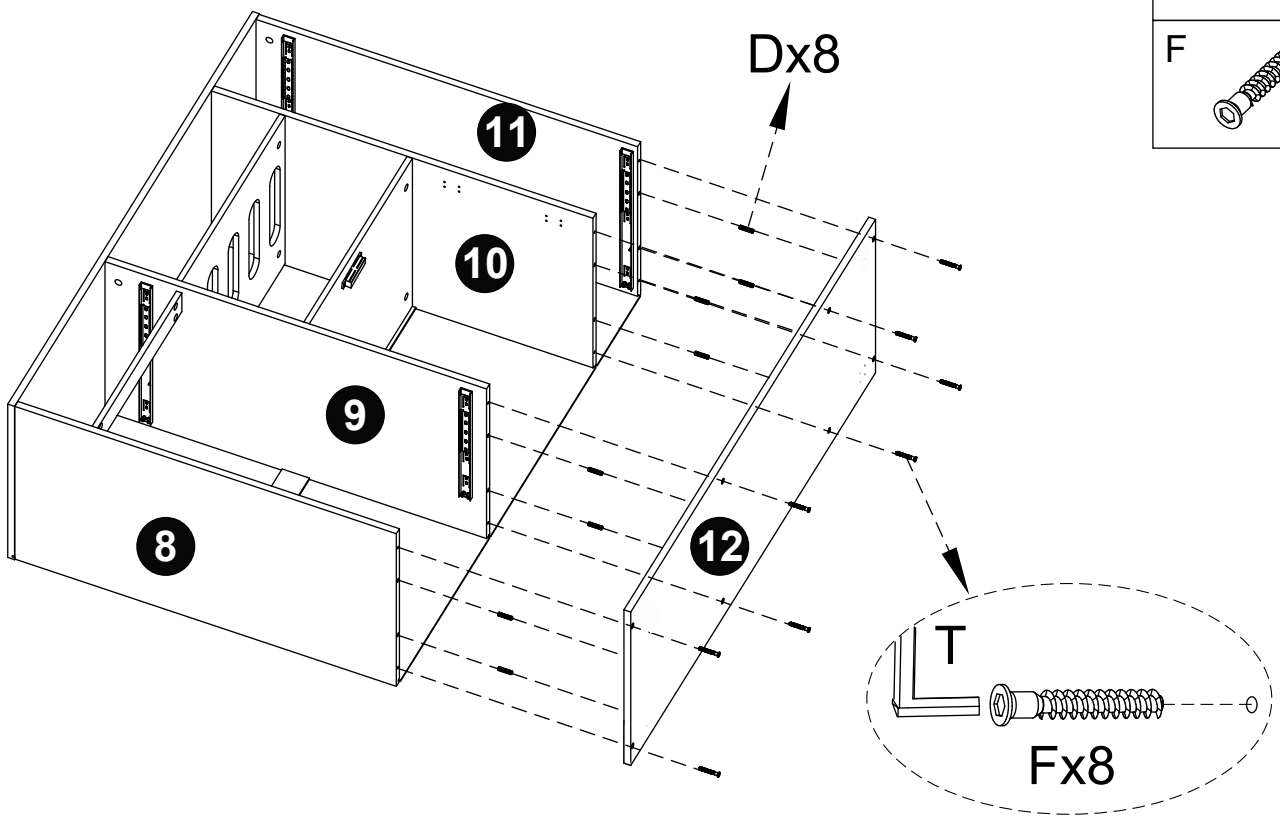

STEP 10

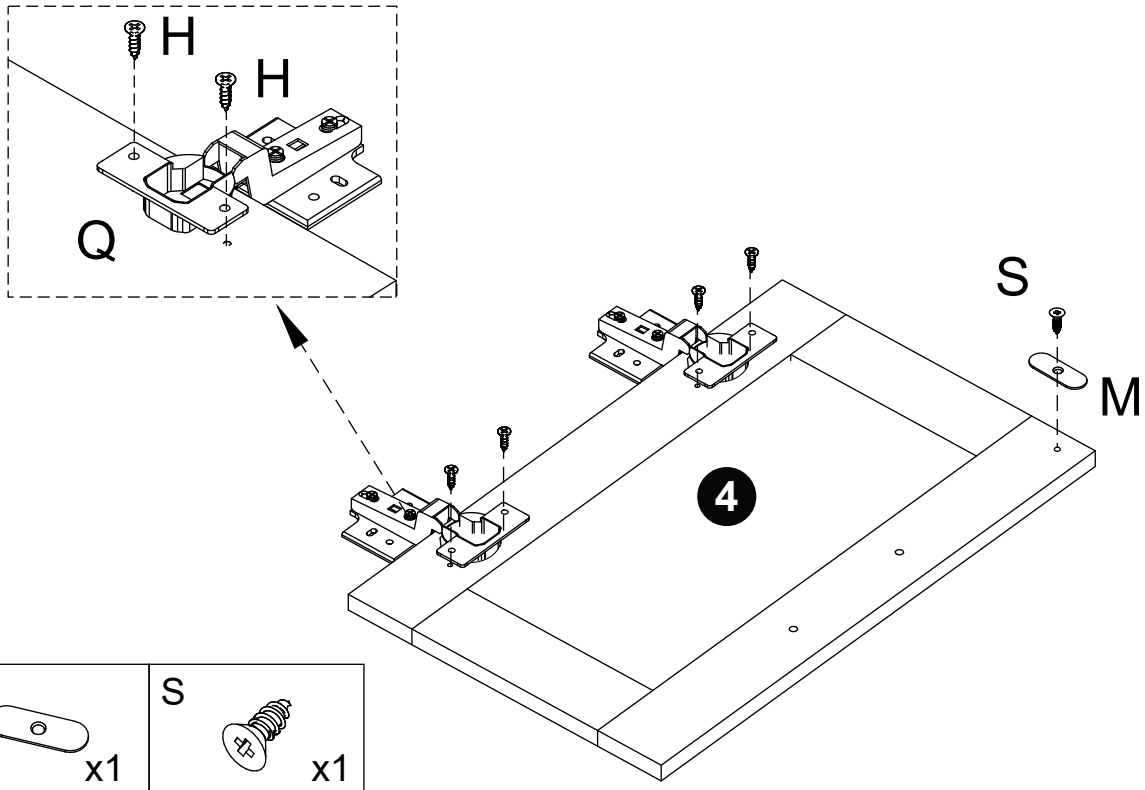

M x1	S x1
H x4	Q x2

STEP 11

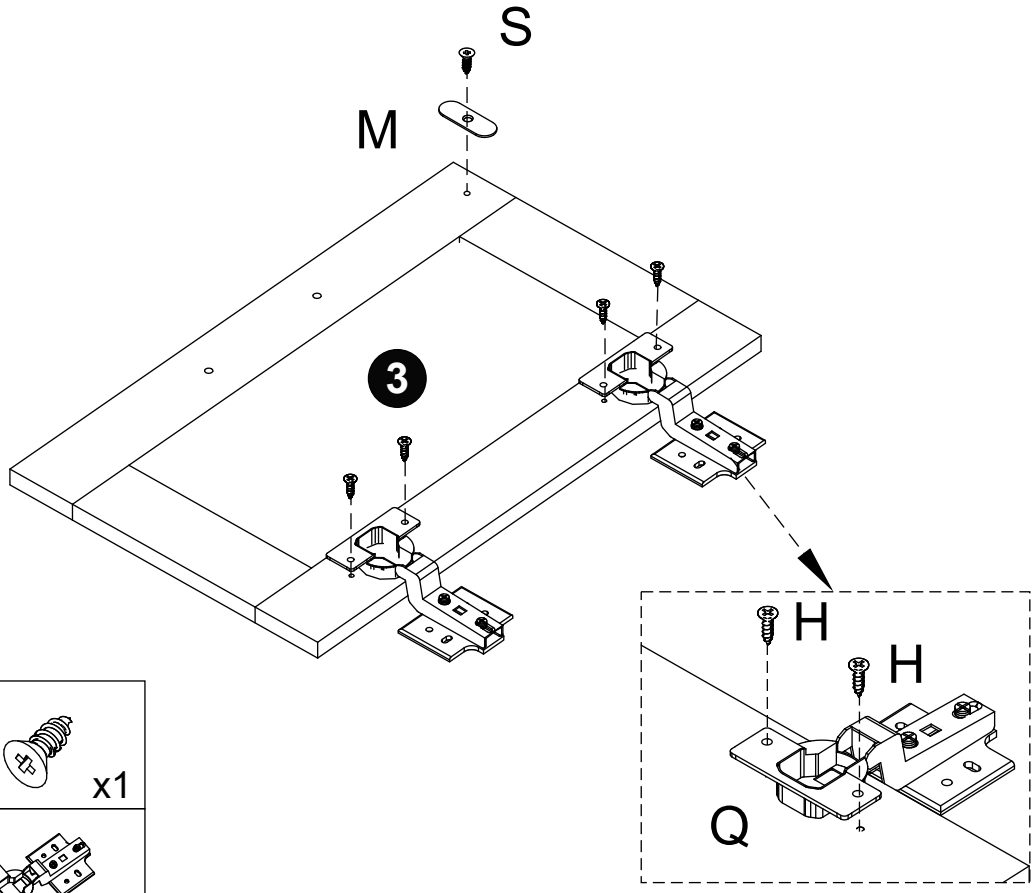

M x1	S x1
H x4	Q x2

STEP 12

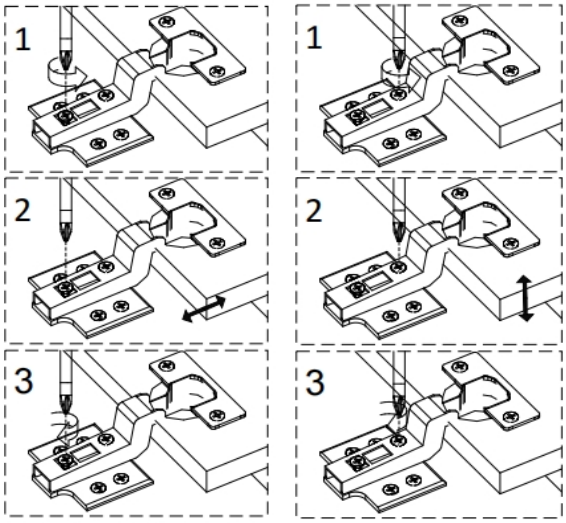

Adjust in or out of the door by adjust this screw.

Adjust the gap of the door by adjust this screw.

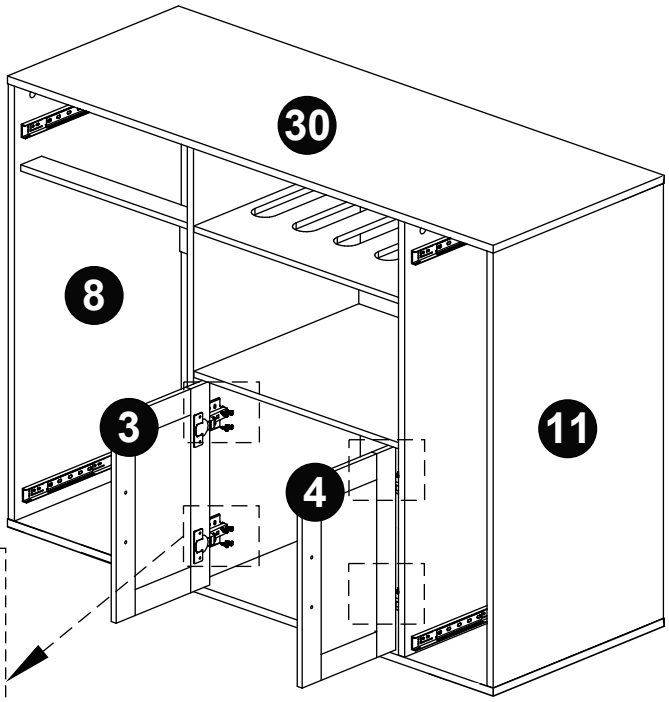

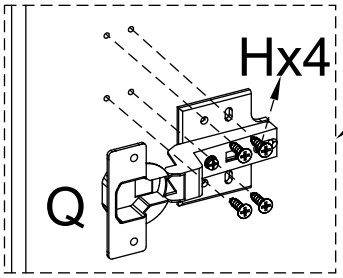

H

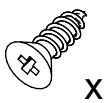

x16

STEP 13

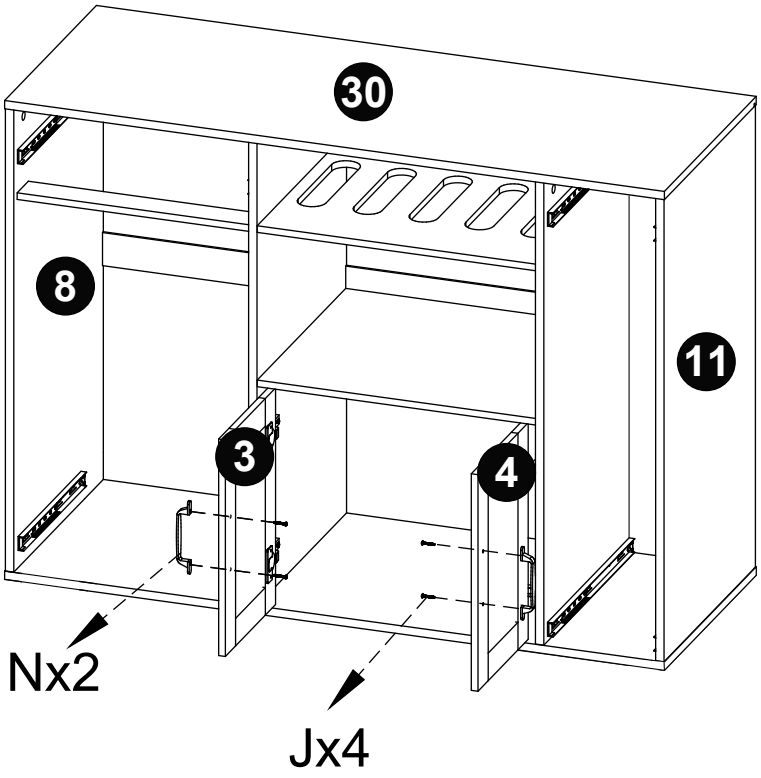

J



x4

N

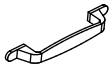

x2

STEP 14

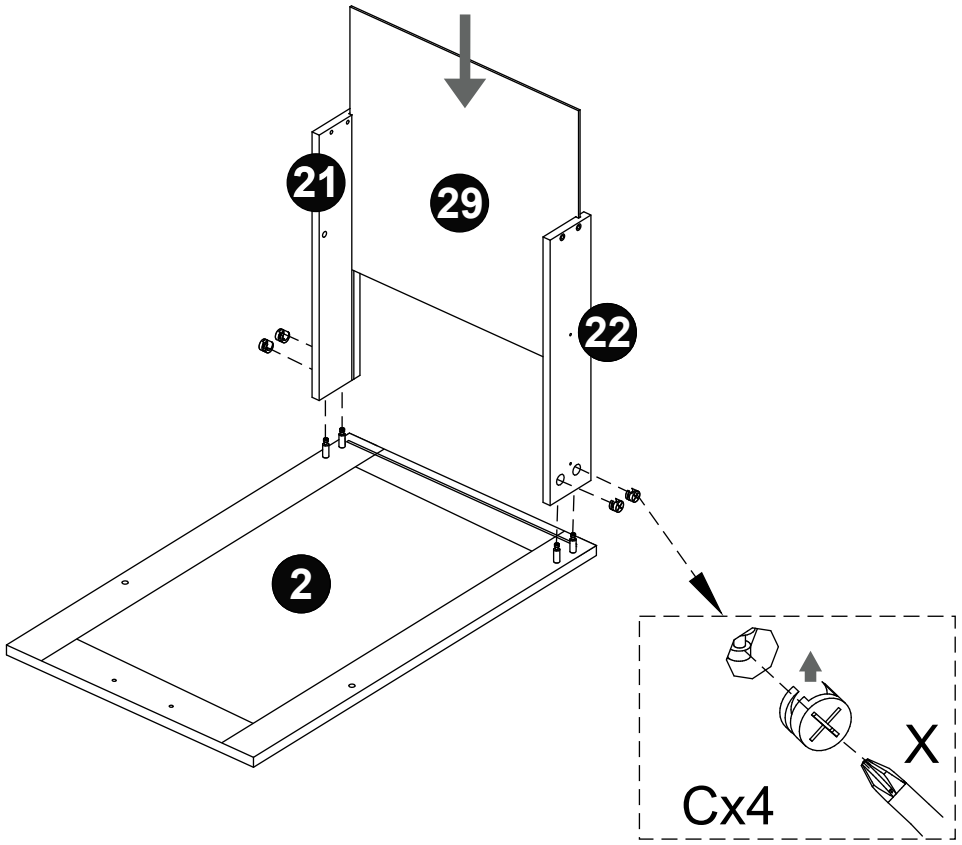

C



x4

STEP 15

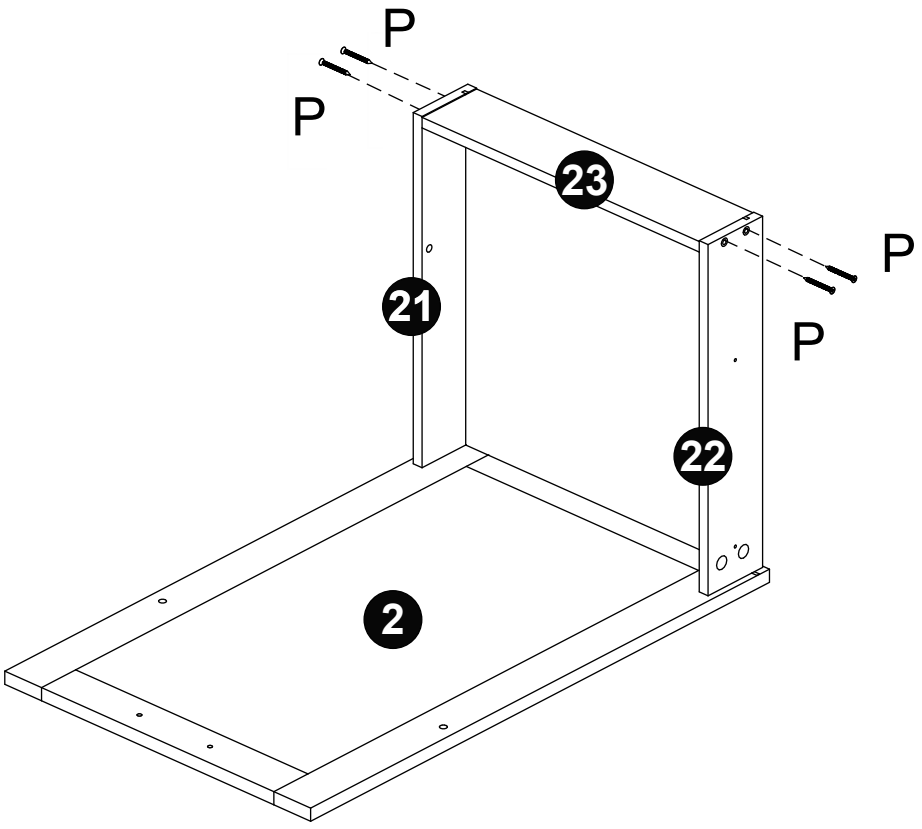

P



x4

STEP 16

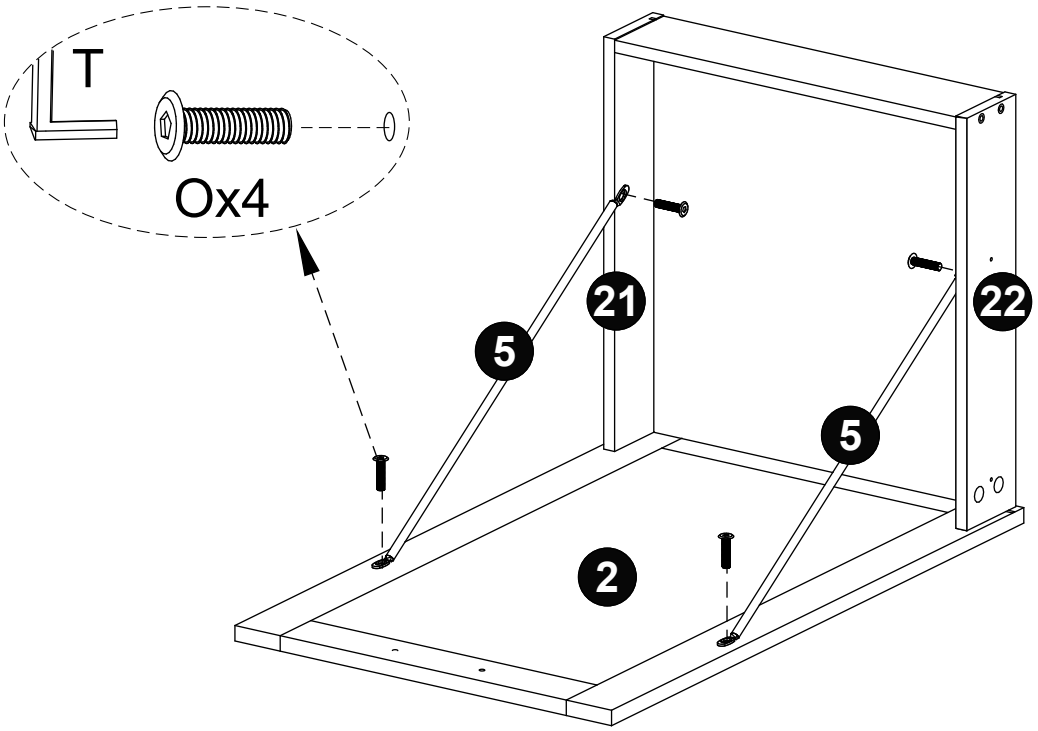

O x4

STEP 17

H x4

Y-Y2 x2

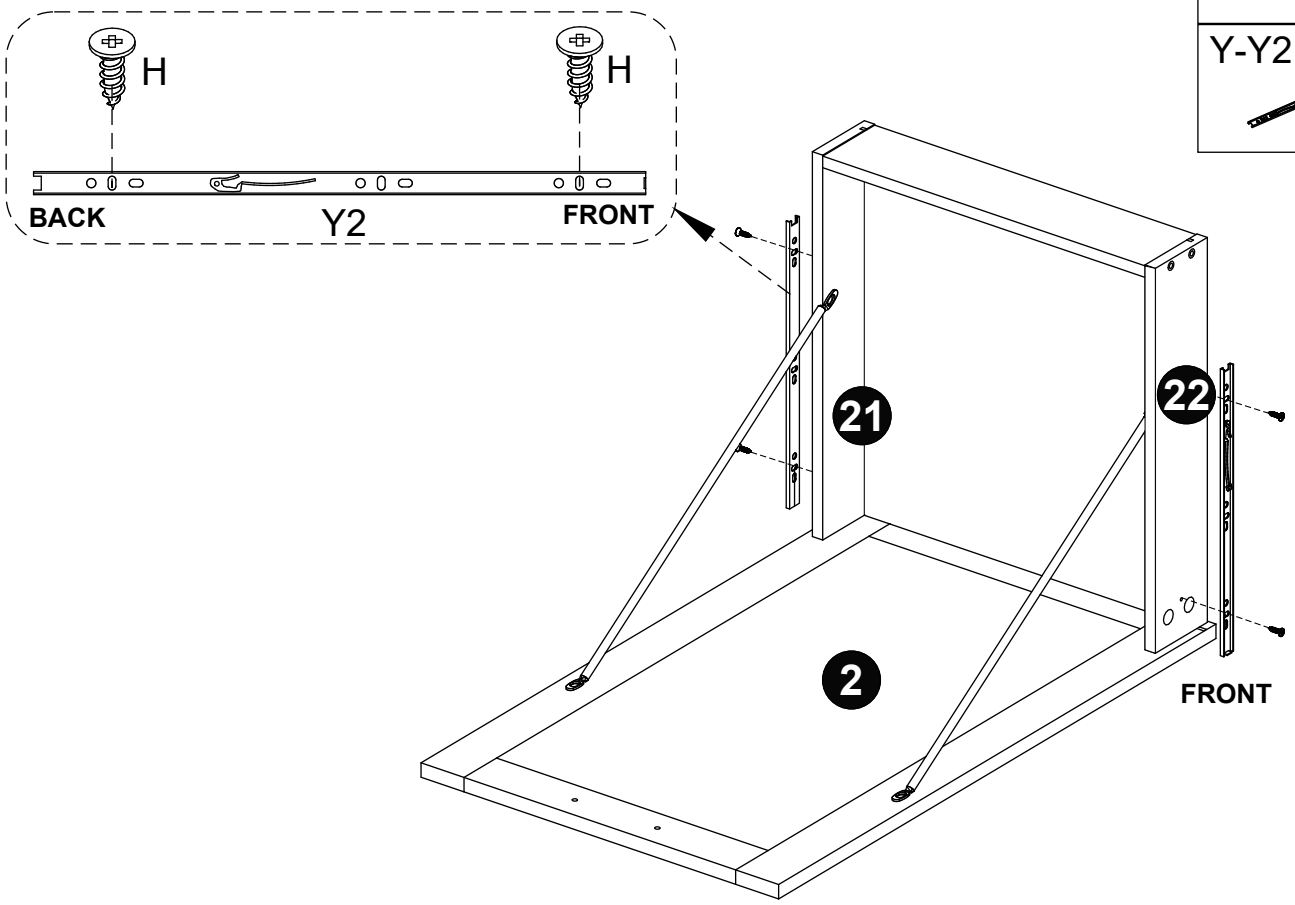

STEP 18

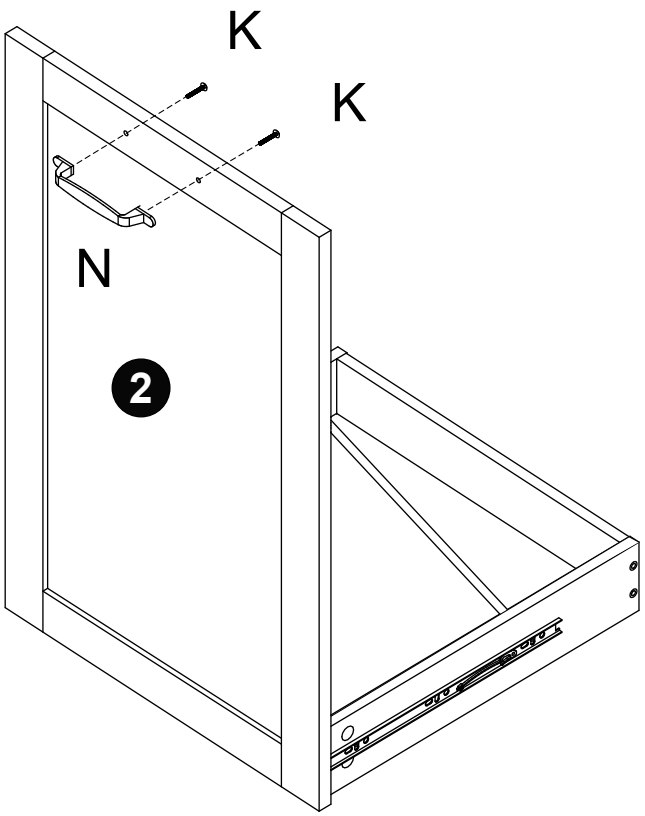

K 	x2
N 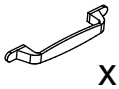	x1

STEP 19

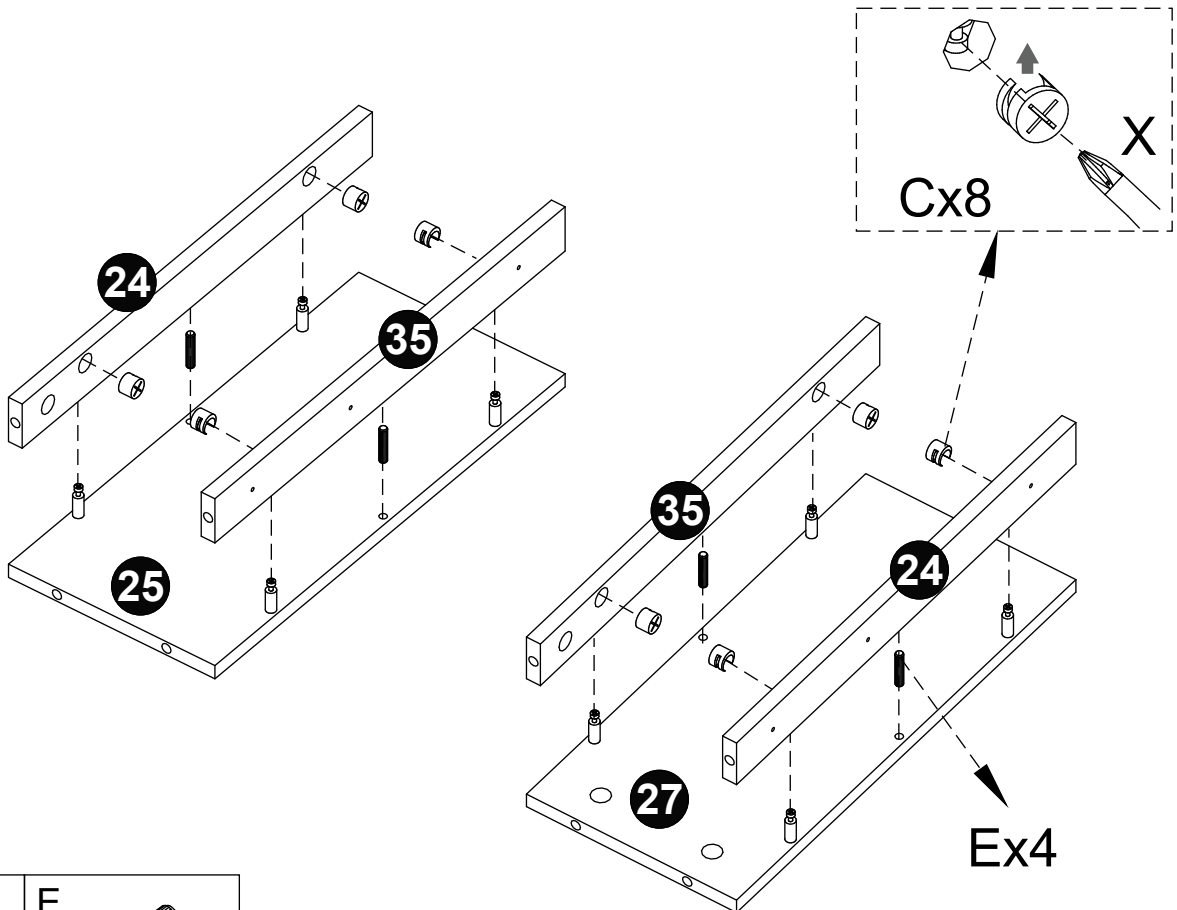

C 	x8
E 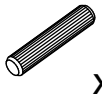	x4

STEP 20

H x12

R-R2 x4

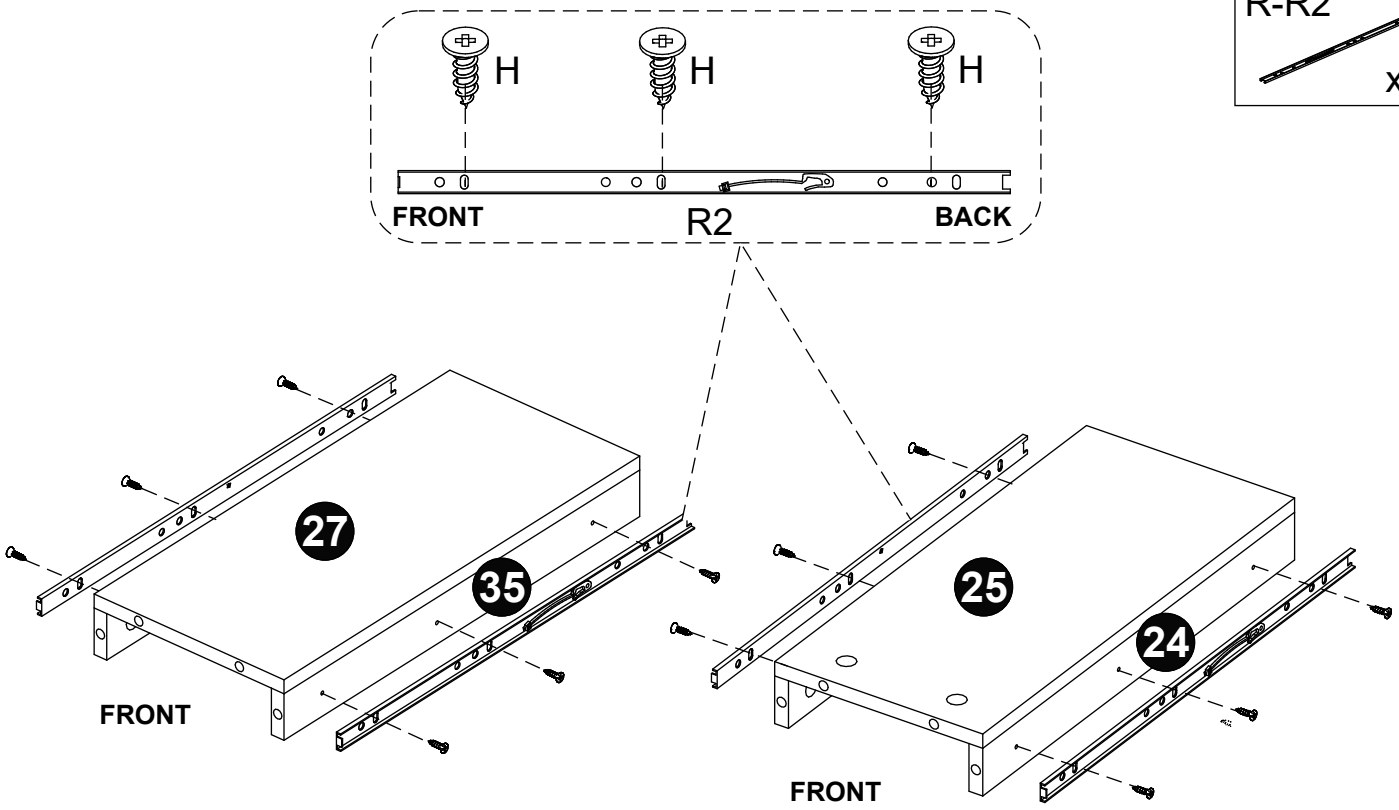

STEP 21

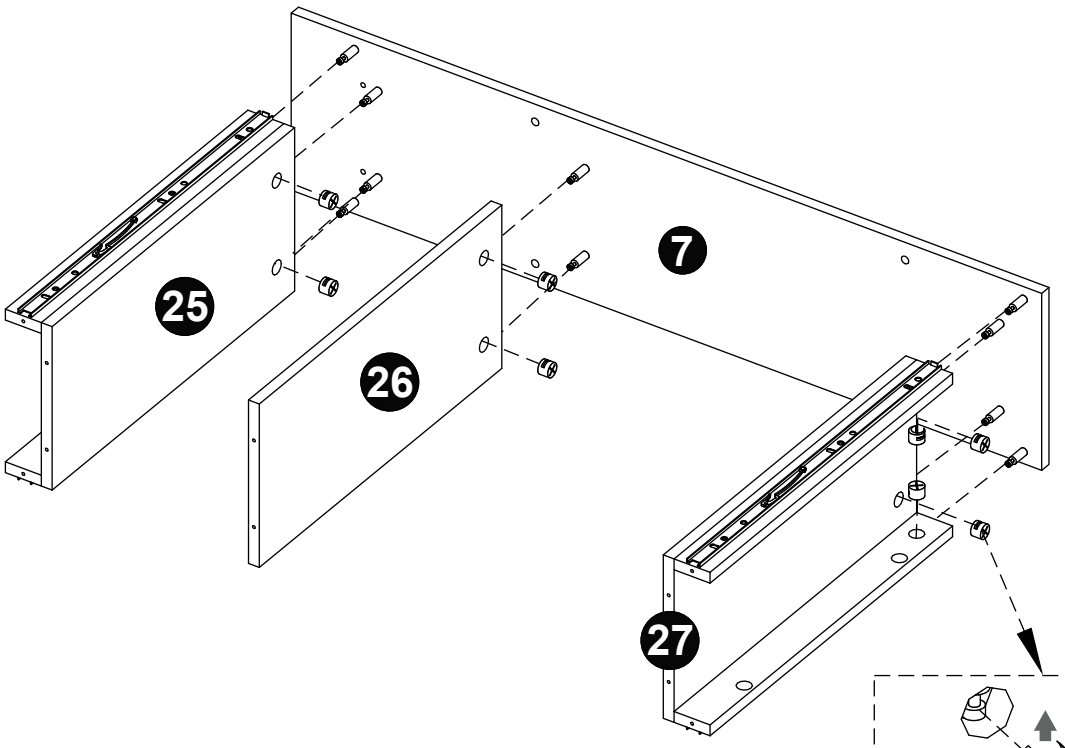

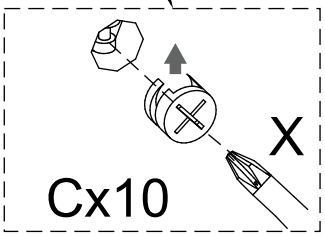

C x10

STEP 22

G x10

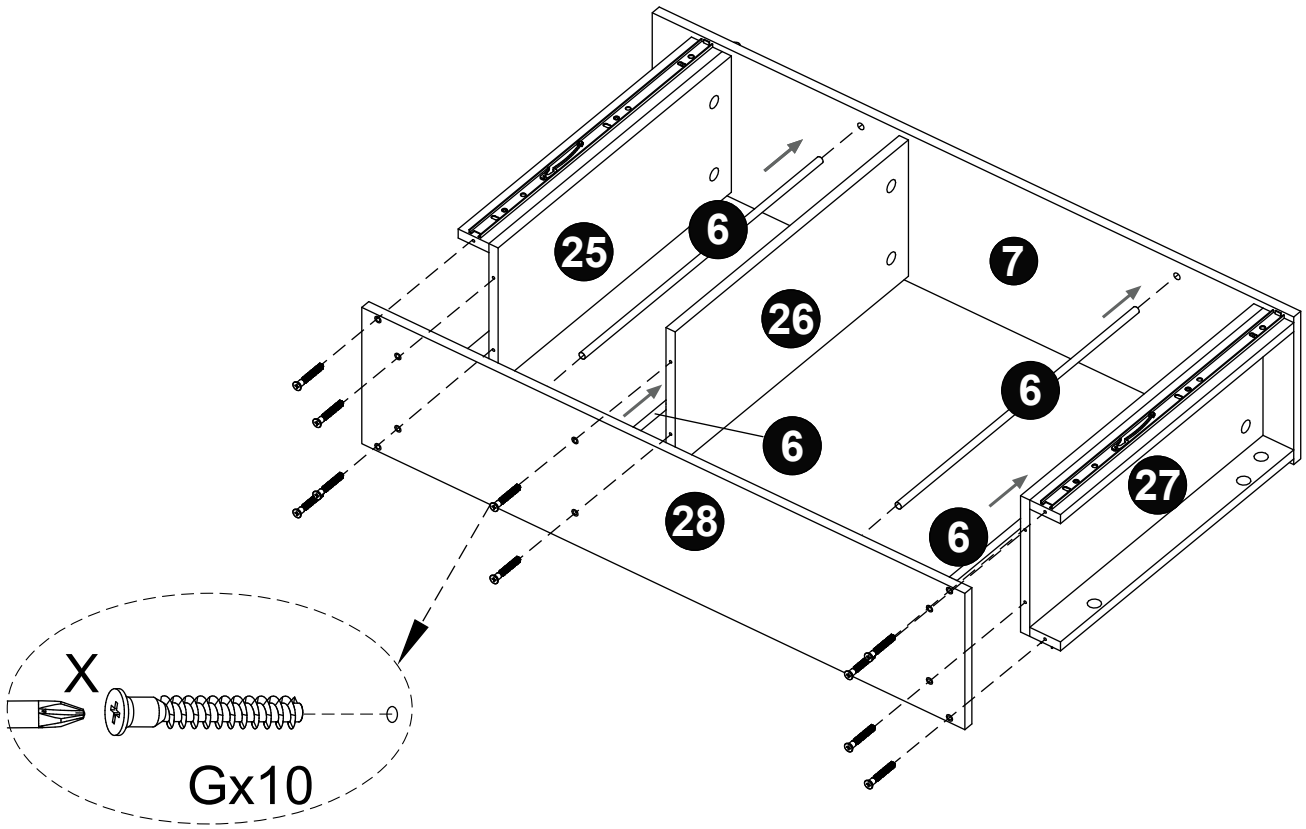

STEP 23

H x6

R-R2 x2

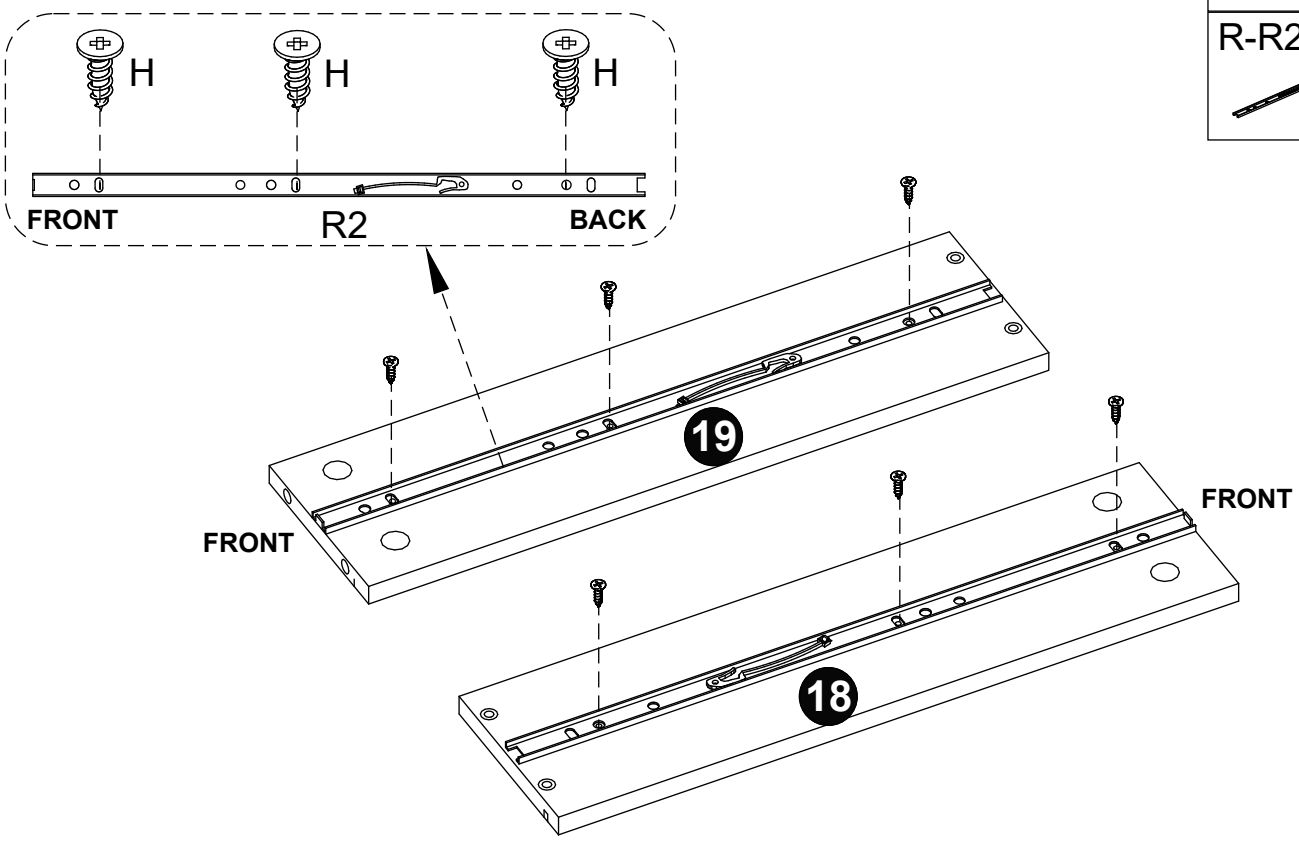

STEP 24

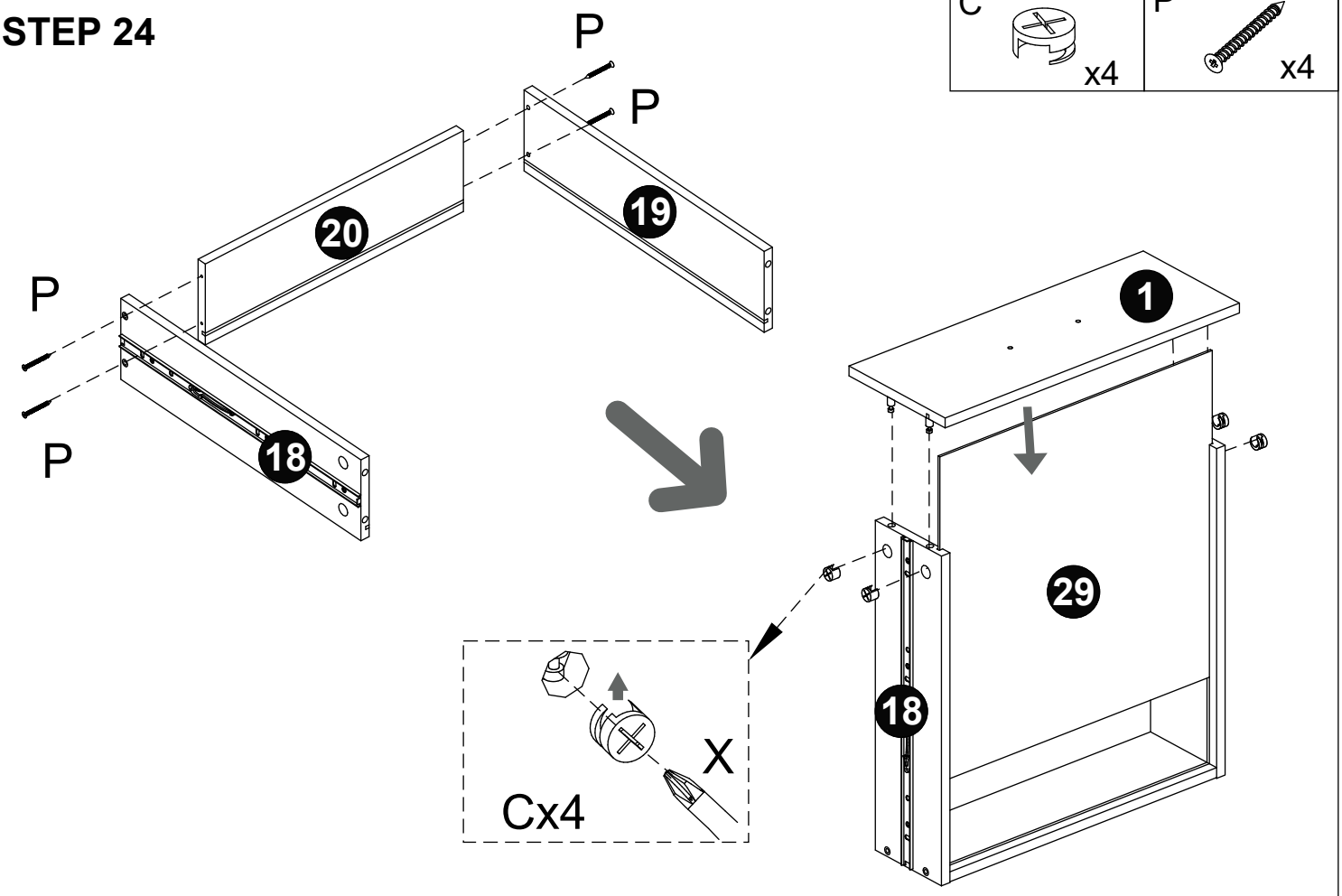

STEP 25

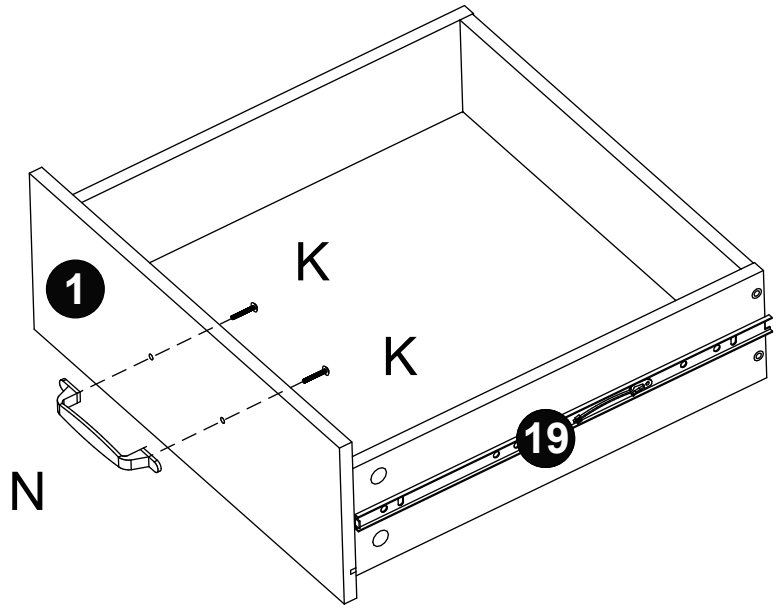

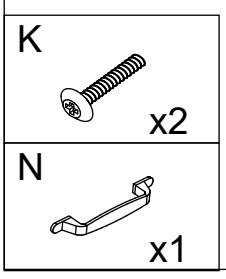

STEP 26

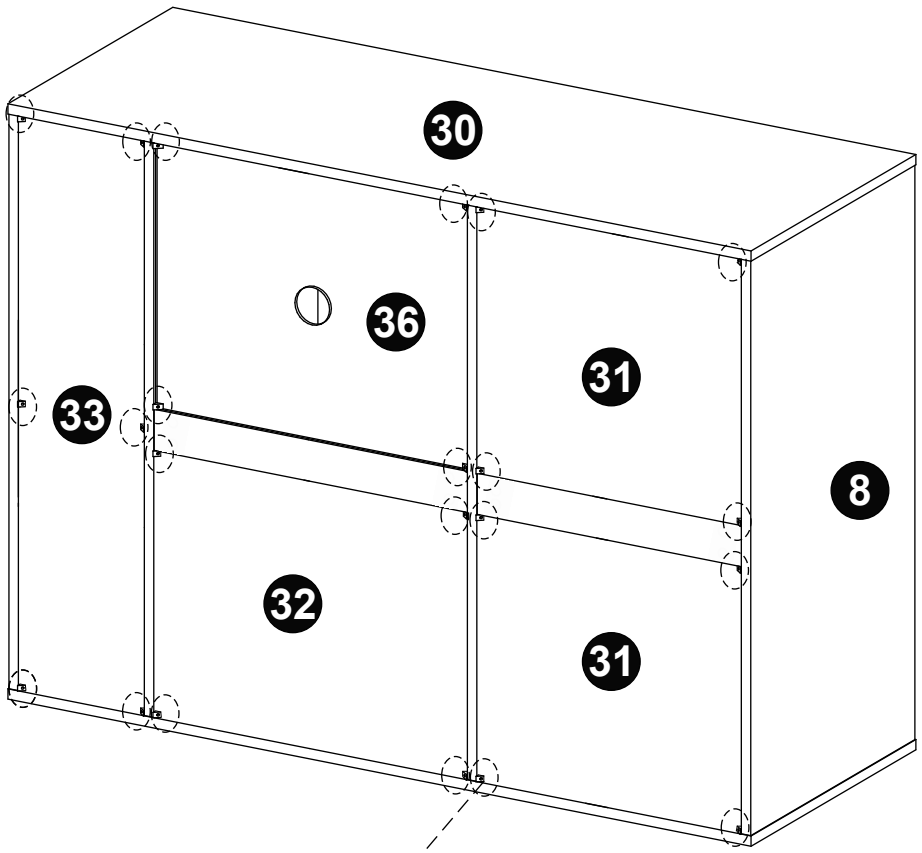

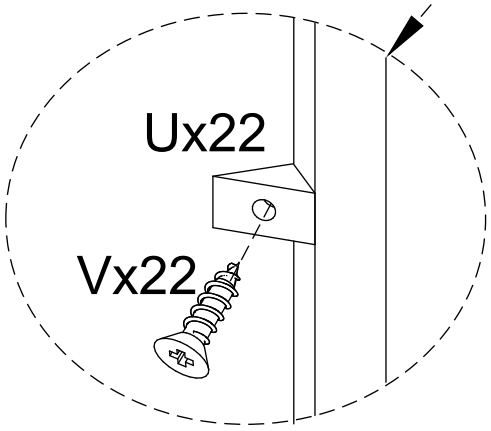

U 	x22
V 	x22

STEP 27

