Whitehaven® | K-5828

Large sink rack

Features

- Fits in the large bowl of the K-6426 and K-6427 Whitehaven kitchen sinks
- Helps protect sink surface from daily wear
- Dishwasher-safe
- Rubber feet provide added protection

Available Colors/Finishes

Color tiles intended for reference only.

ST Stainless Steel

1-800-4KOHLER (1-800-456-4537)
Kohler Co. reserves the right to make revisions without notice to product specifications.
For the most current specification sheet, go to www.kohler.com USA or www.kohler.ca Canada.
6-29-2026 18:24 - US-CA

Codes/Standards

None Applicable

Material

- Durable stainless steel construction

Recommended Products/Accessories

K-23729 Stainless steel cleaner

Warranty

See website for detailed warranty information.

KOHLER® One-Year Limited Warranty

1-800-4KOHLER (1-800-456-4537)
Kohler Co. reserves the right to make revisions without notice to product specifications.
For the most current specification sheet, go to www.kohler.com USA or www.kohler.ca Canada.
6-29-2026 18:24 - US-CA

THE BOLD LOOK OF KOHLER

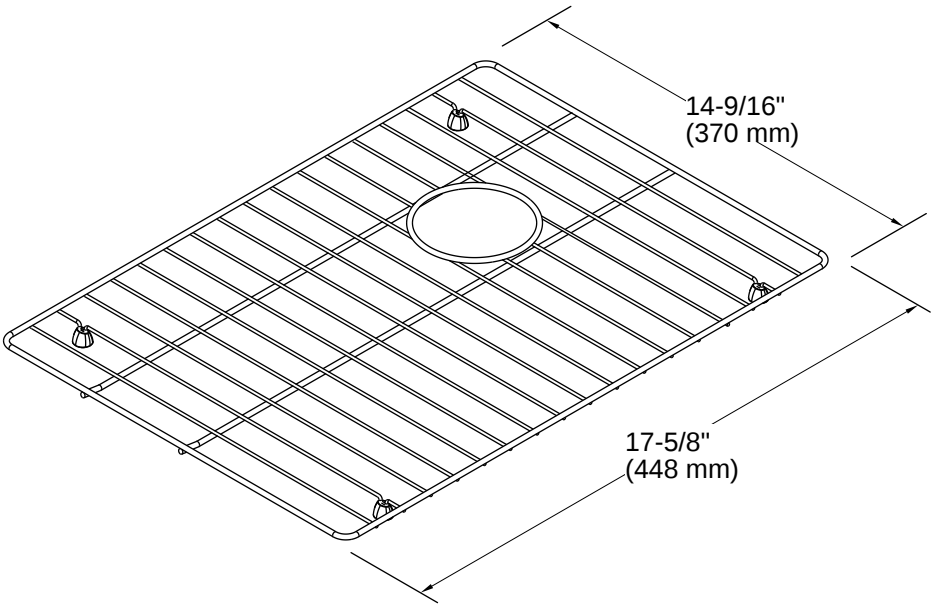

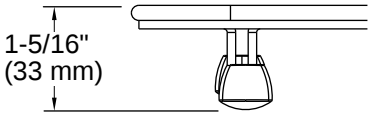

Installation Notes

Install this product according to the installation instructions.

1-800-4KOHLER (1-800-456-4537)
Kohler Co. reserves the right to make revisions without notice to product specifications.
For the most current specification sheet, go to www.kohler.com USA or www.kohler.ca Canada.
6-29-2026 18:24 - US-CA

THE BOLD LOOK OF KOHLER