ASSEMBLY INSTRUCTION

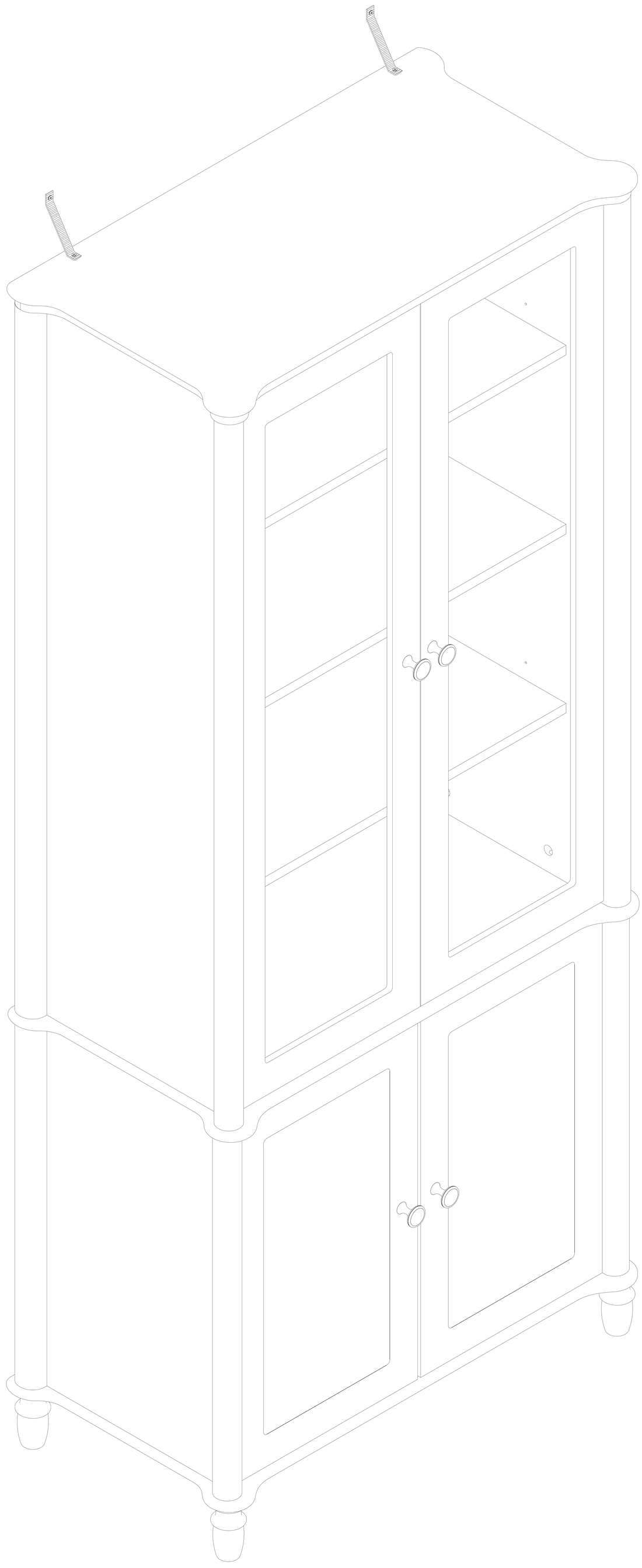

1. Thank you for choosing our products.
2. Return Policy

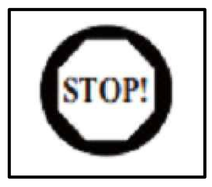

DO NOT RETURN TO THE STORE! Skip the process of returning your product and contact us directly for a replacement

If you find that parts of your order are missing or damaged, we will gladly ship any needed replacement parts free of charge.

If your product quality does not meet your expectations or you have found any sort of defect, please contact our customer service department and let us know the details of your order and any issues encountered, we will try our best to provide you with a solution. Feel free to also directly contact our manufacturer concerning needed replacement parts and they will be happy to help provide you with a solution or answer any questions you may have.

Recommendations Before Beginning Assembly

- Read instructions, cover to cover
- Have 2-4 adults on hand for assembly depending on product size
- Do not assemble directly on flooring or carpet
- Assemble on a clean non-marring surface (example: packing foam)
- Save all packaging until finished

3. Assembly Notice:

If you encounter any problems during assembly and find that you cannot continue, rest assured we will help you solve the situation as soon as possible. Simply keep all of the parts of the product stored in a safe place and contact us immediately so we may assist you further.

Once you have opened your package, remove all inner hardware packages and take the parts out. One by one, Place the parts out neatly in front of you, then refer to the instructions to ensure no parts are missing. If any pieces are found missing, please carefully look in the box first, as the hardware packaging might have torn making the hardware spill in the box.

Some key parts of your product may be stored and hidden inside of other parts. Please open any zippered or hook & loop storage compartments to remove all parts. (example: cushions and legs being stored in the underside of a sofa)

IMPORTANT: When setting up your product, DO NOT INSTALL THE SCREWS ALL THE WAY IN THE BEGINNING. Place each screw into their proper hole and use your hand to twist the screw halfway. Twist all the screws in halfway to ensure the holes will match up properly and the product is level on the ground. When everything seems fitted, then tighten the screws.

When you have completed assembly, we suggest you have more than one person to assist you with lifting and placing the product.

Care & Maintenance

Do not put hot items directly on furniture surface

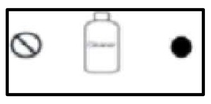
Do not clean furniture with harsh cleansers or polish

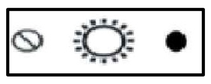
Do not place furniture under direct sunlight

Do not place furniture near heating or cooling vents

Do not write on furniture without a padded barrier to protect the surface

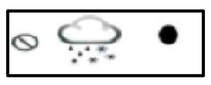
Do not place furniture outside. For indoor use only

Not for commercial use. For residential use only

Stains may be removed with mild soap solution and damp cloth

Children should not climb or jump on the furniture

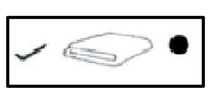
Dust and pick-up spills using a clean, non-colored, lint-free cloth

Caution

This product contains small components. Please ensure that they are kept away from small children.

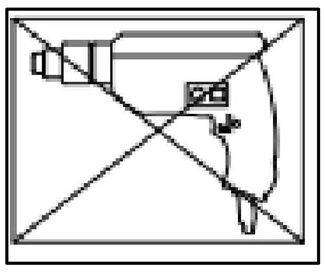

Parts List

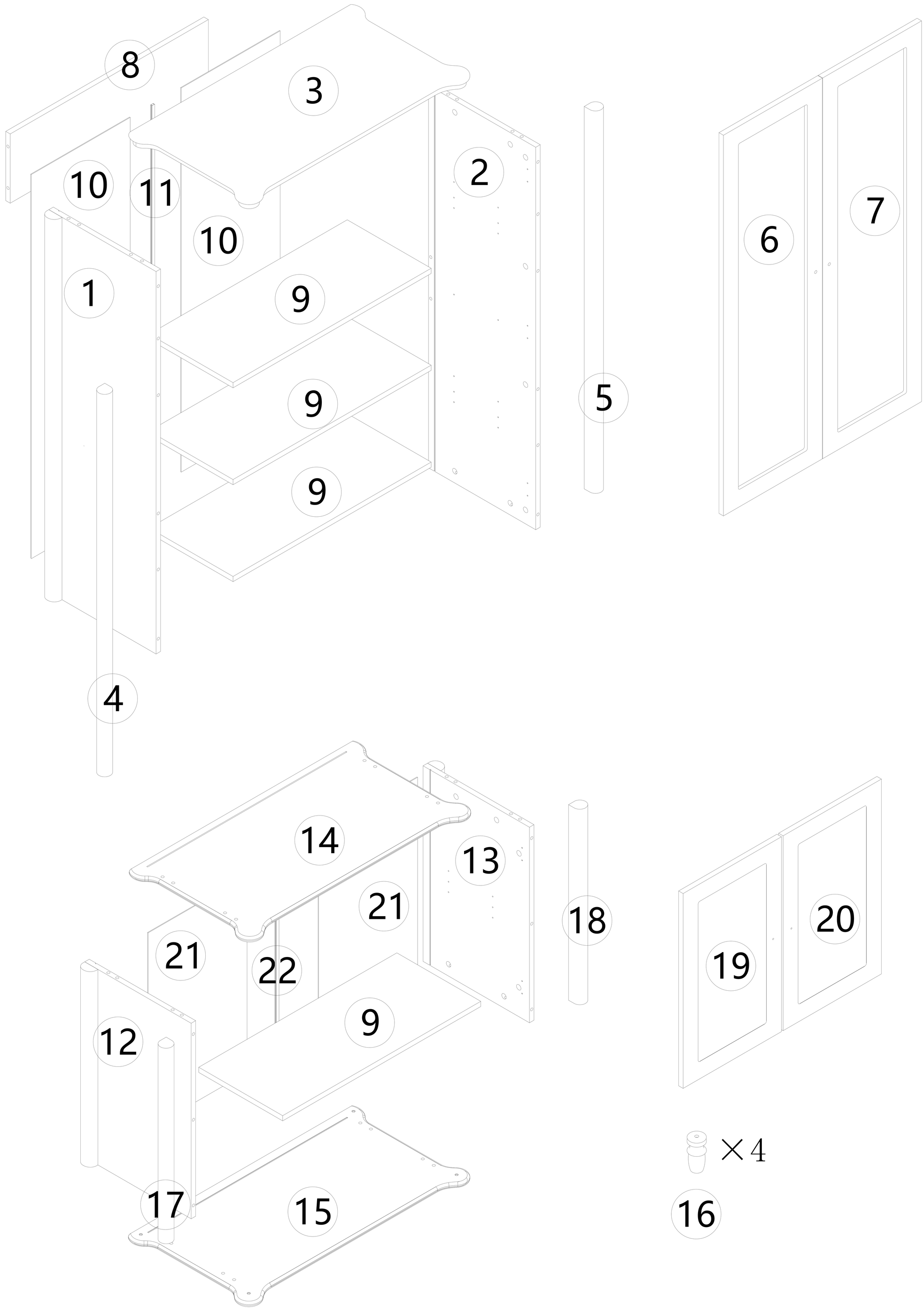

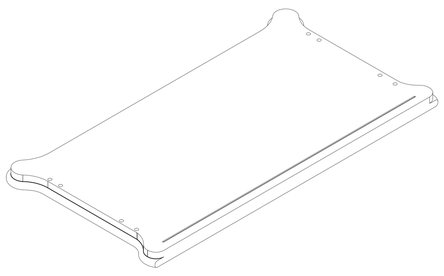	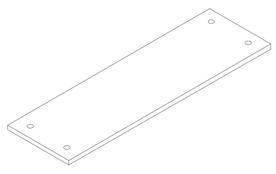	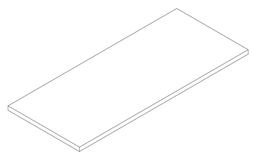	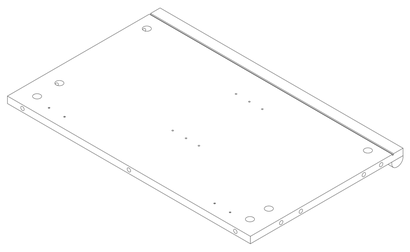
③ ×1PC	⑧ ×1PC	⑨ ×4PCS	⑫ ×1PC
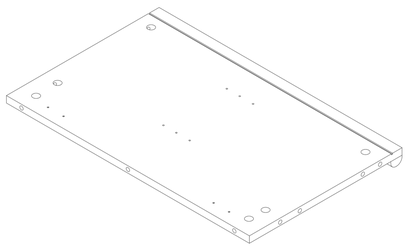	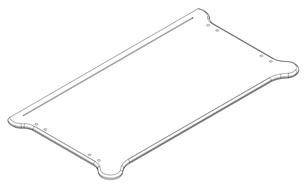	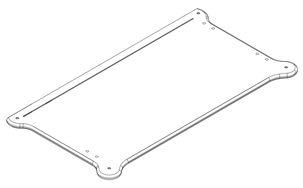	
⑬ ×1PC	⑭ ×1PC	⑮ ×1PC	⑯ ×4PCS
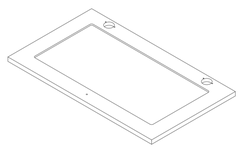	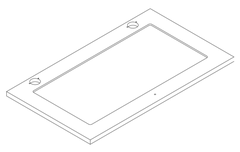	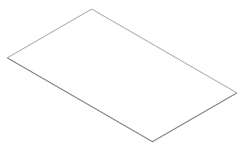	
⑲ ×1PC	⑳ ×1PC	㉑ ×2PCS	

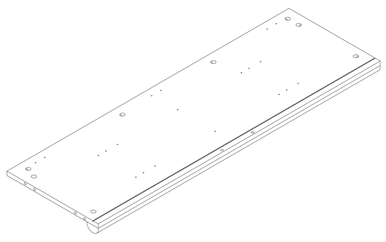	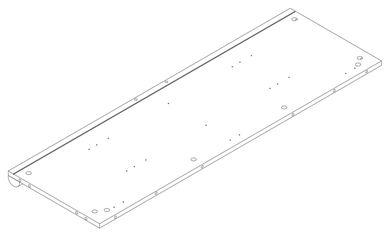	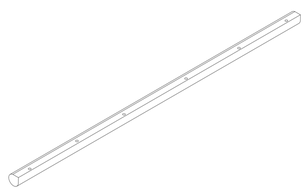	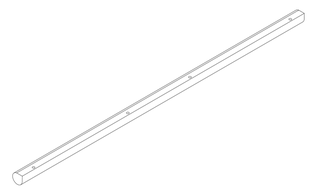
① ×1PC	② ×1PC	④ ×1PC	⑤ ×1PC
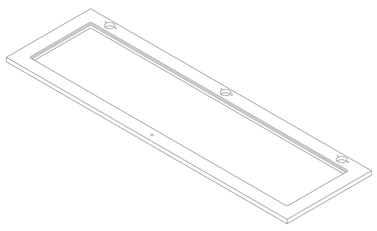	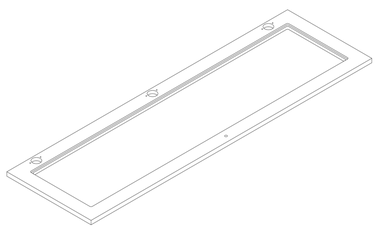	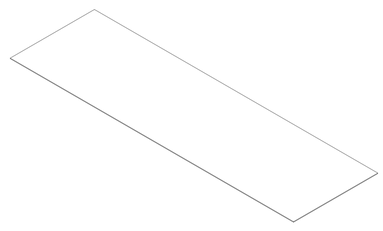	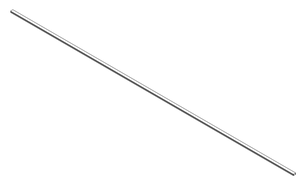
⑥ ×1PC	⑦ ×1PC	⑩ ×2PCS	⑪ ×1PC
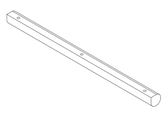	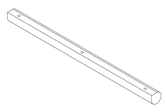		
⑰ ×1PC	⑱ ×1PC	㉒ ×1PC	

Hardware list

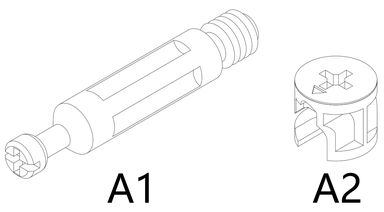 A1 A2	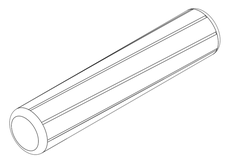 8 x 40MM	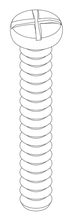 M8 x 40MM	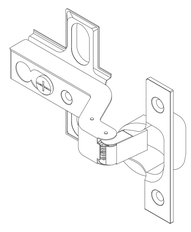	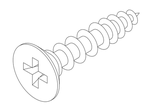 3.5 x 14MM
A ×32STES	B ×22PCS	C ×4PCS	D ×10PCS	E ×64PCS
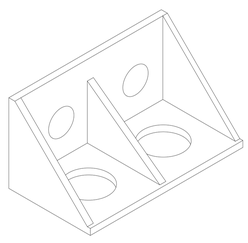	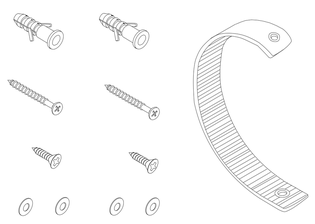	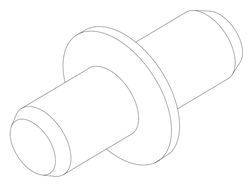 6MM	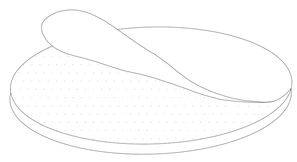	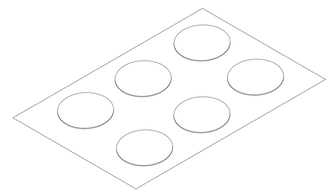
F ×2PCS	G ×2STES	H ×16PCS	I ×4PCS	J ×32PCS
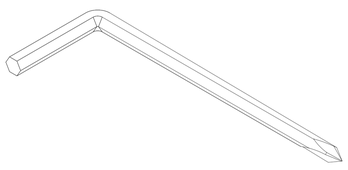	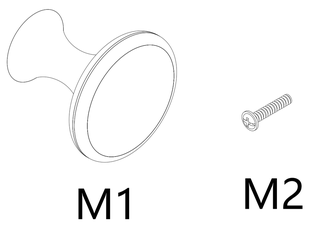 M1 M2			
L ×1PC	M ×4STES			

Step 1

A1		
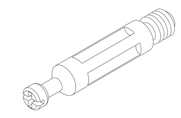	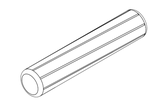 8 x 40MM	
A ×20PCS	B ×12PCS	L ×1PC

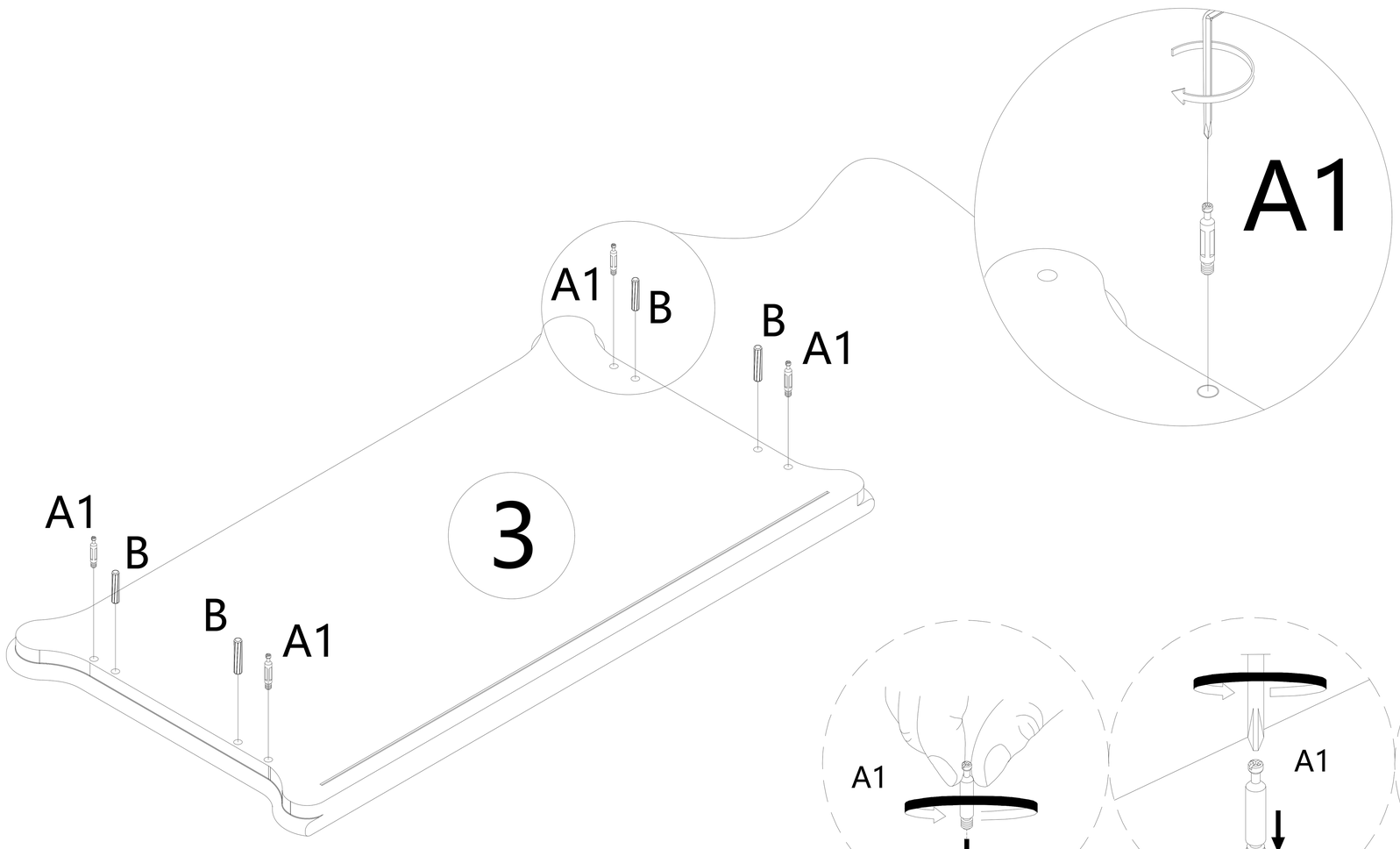

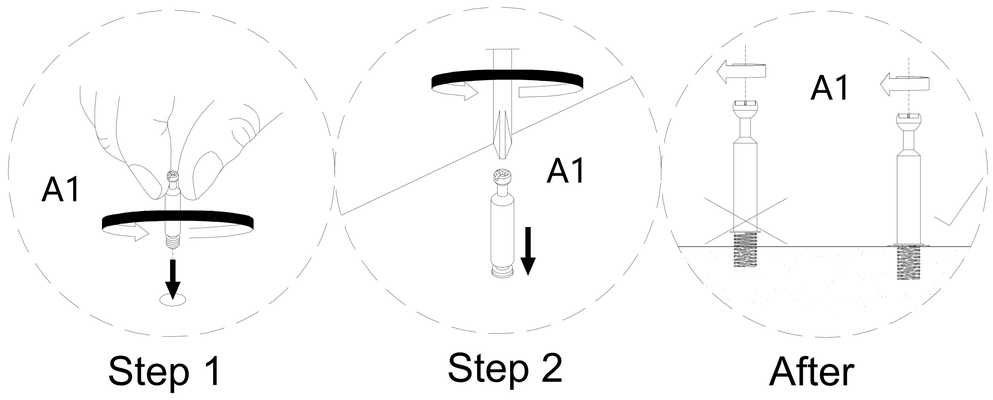

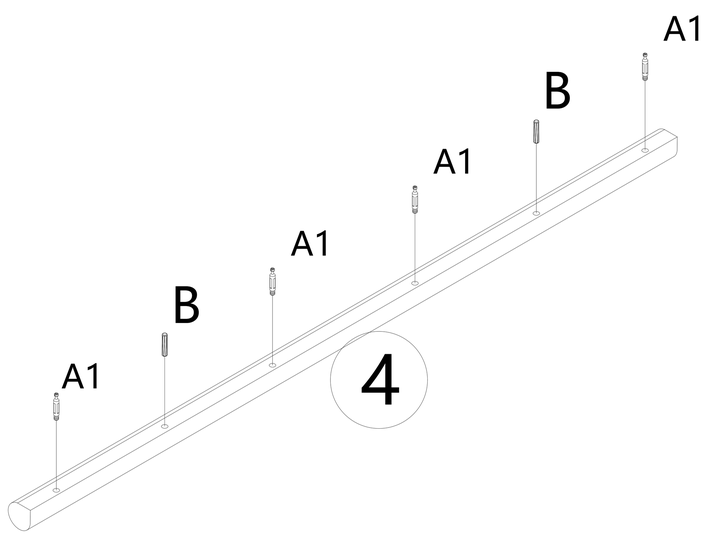

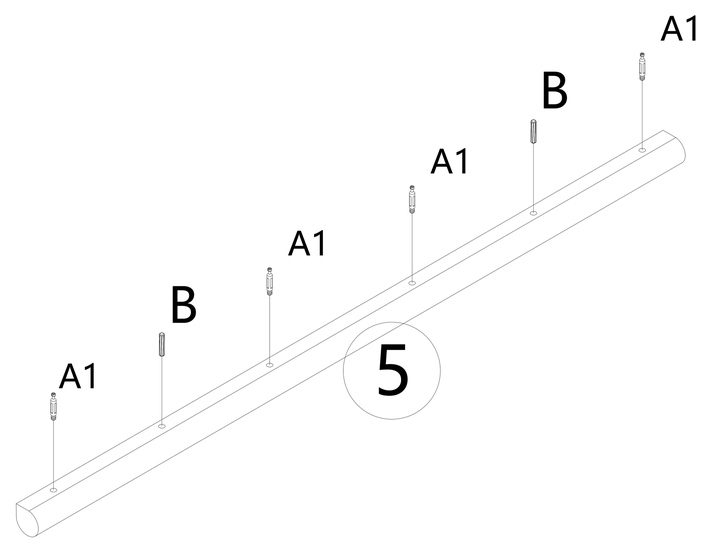

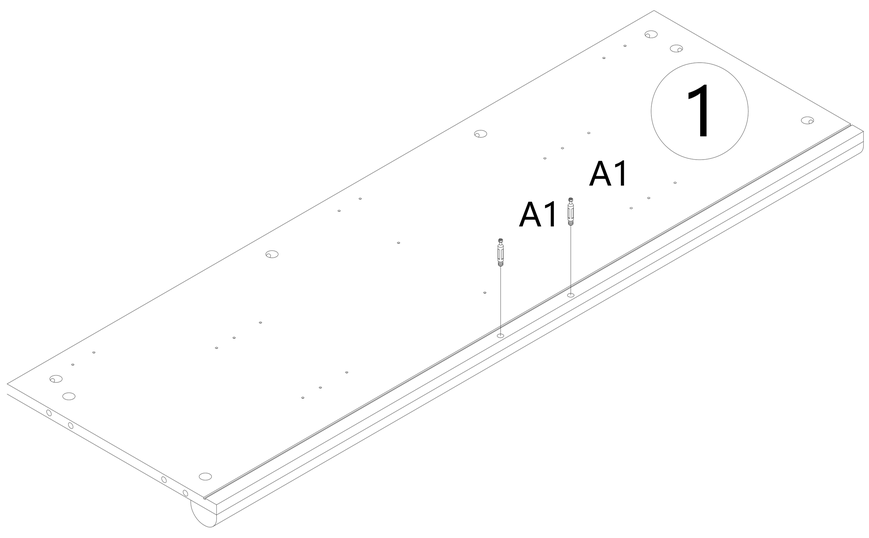

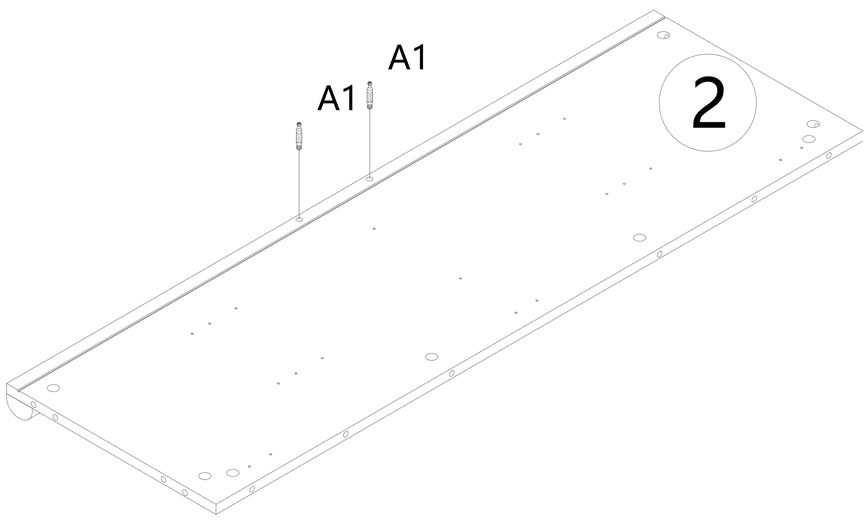

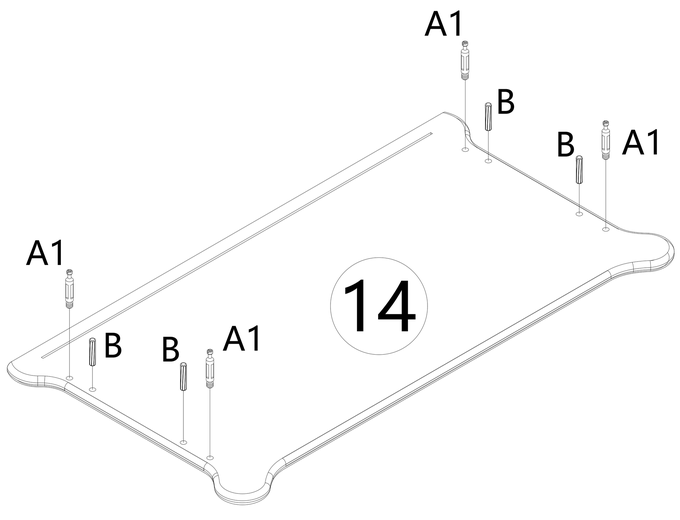

Step 2

	A2
L ×1PC	A ×8PCS

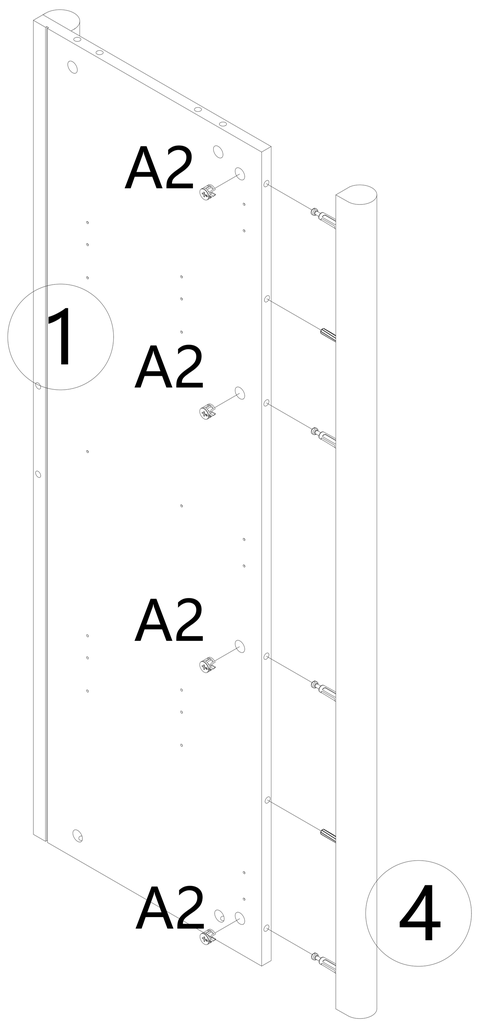

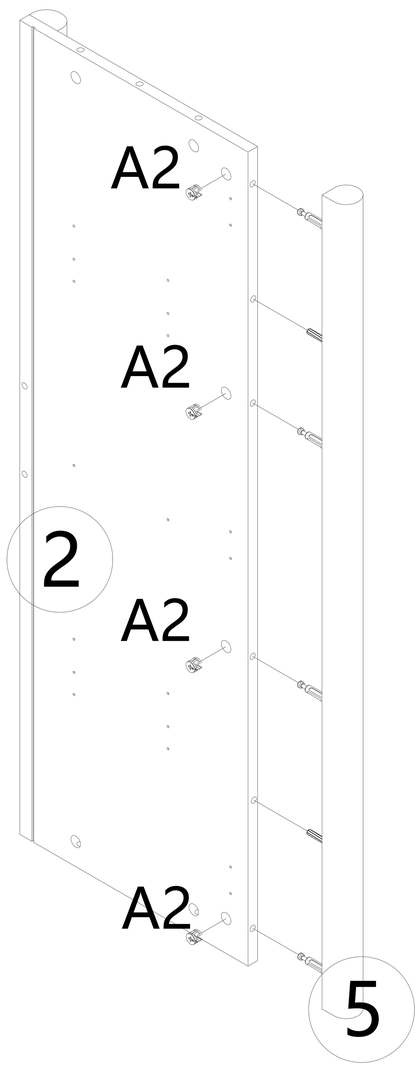

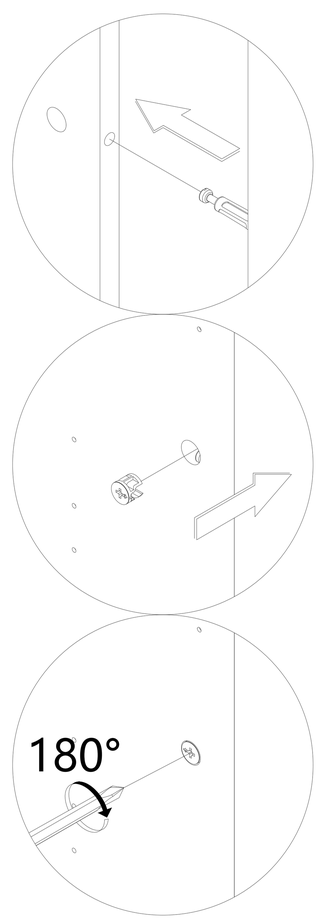

Step 3

	A2 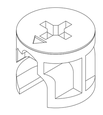
L ×1PC	A ×4PCS

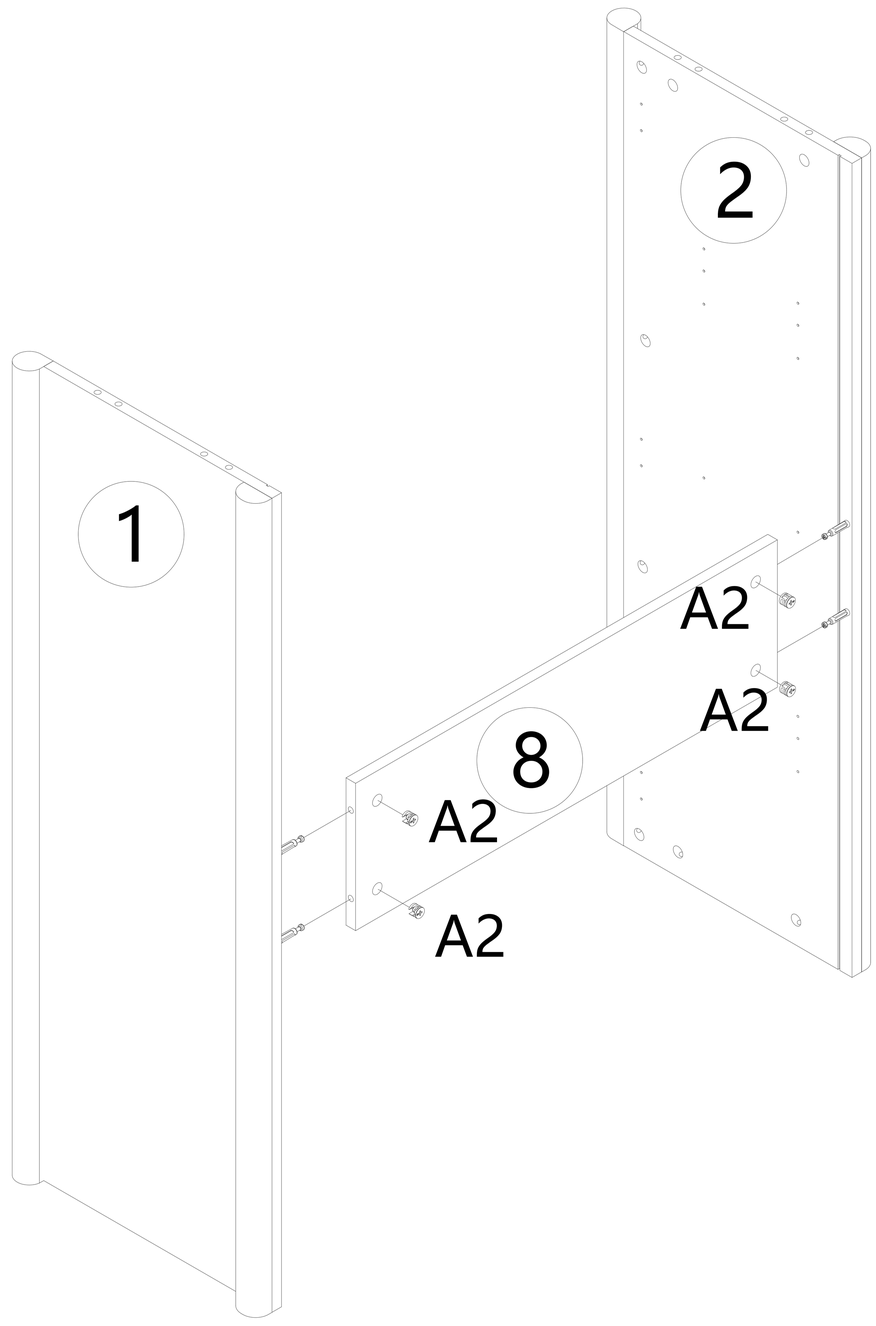

Step 4

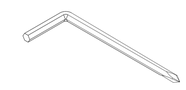	A2 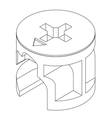
L ×1PC	A ×4PCS

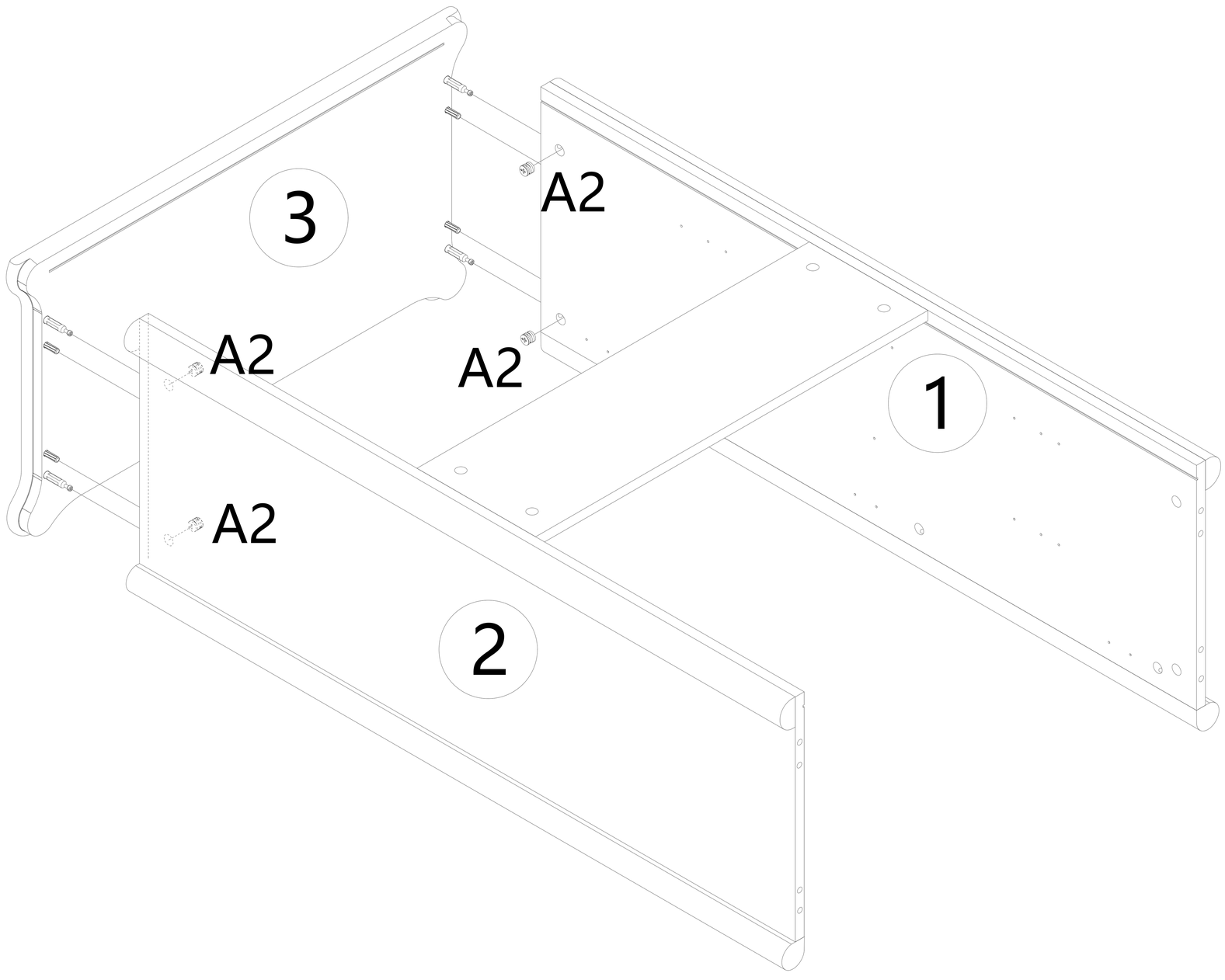

Step 5

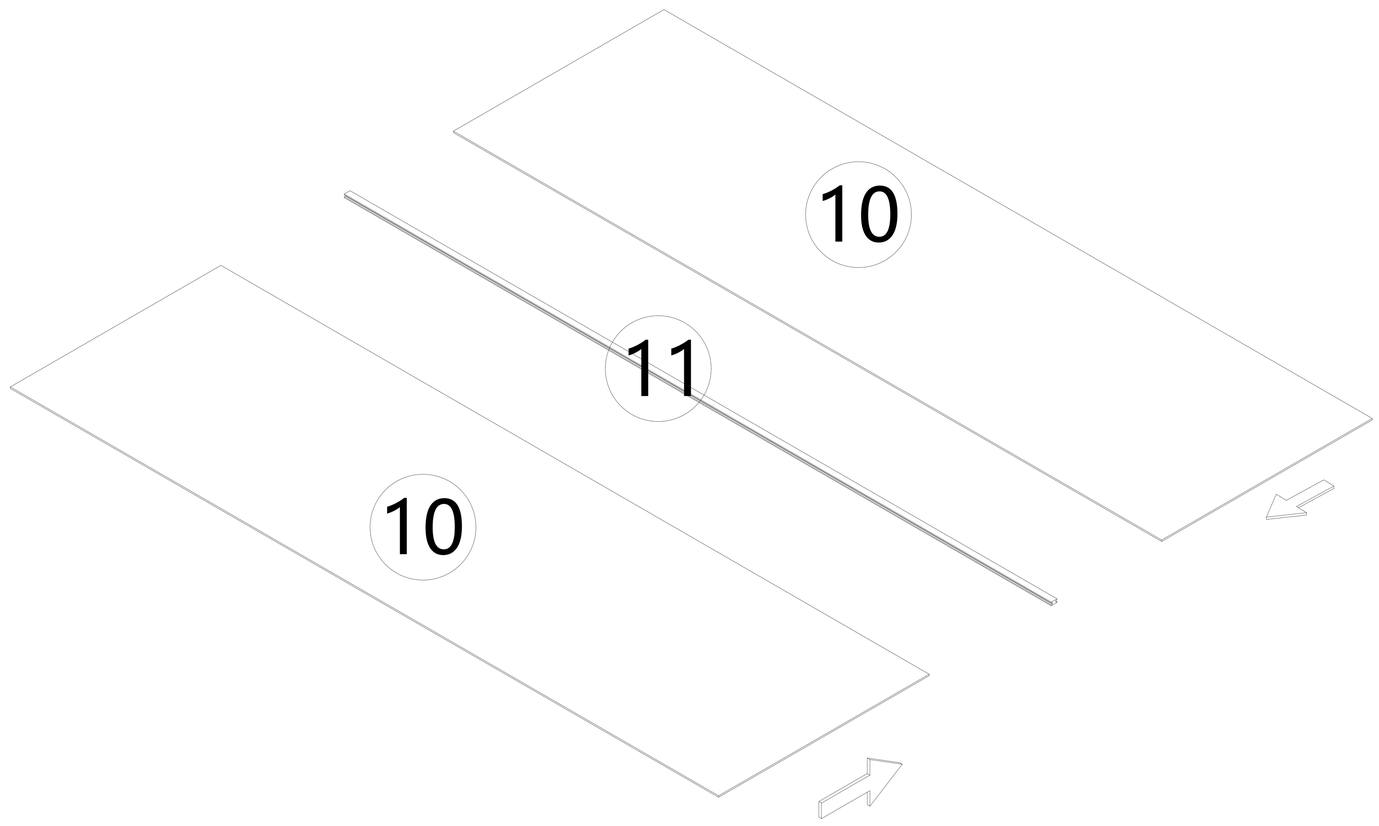

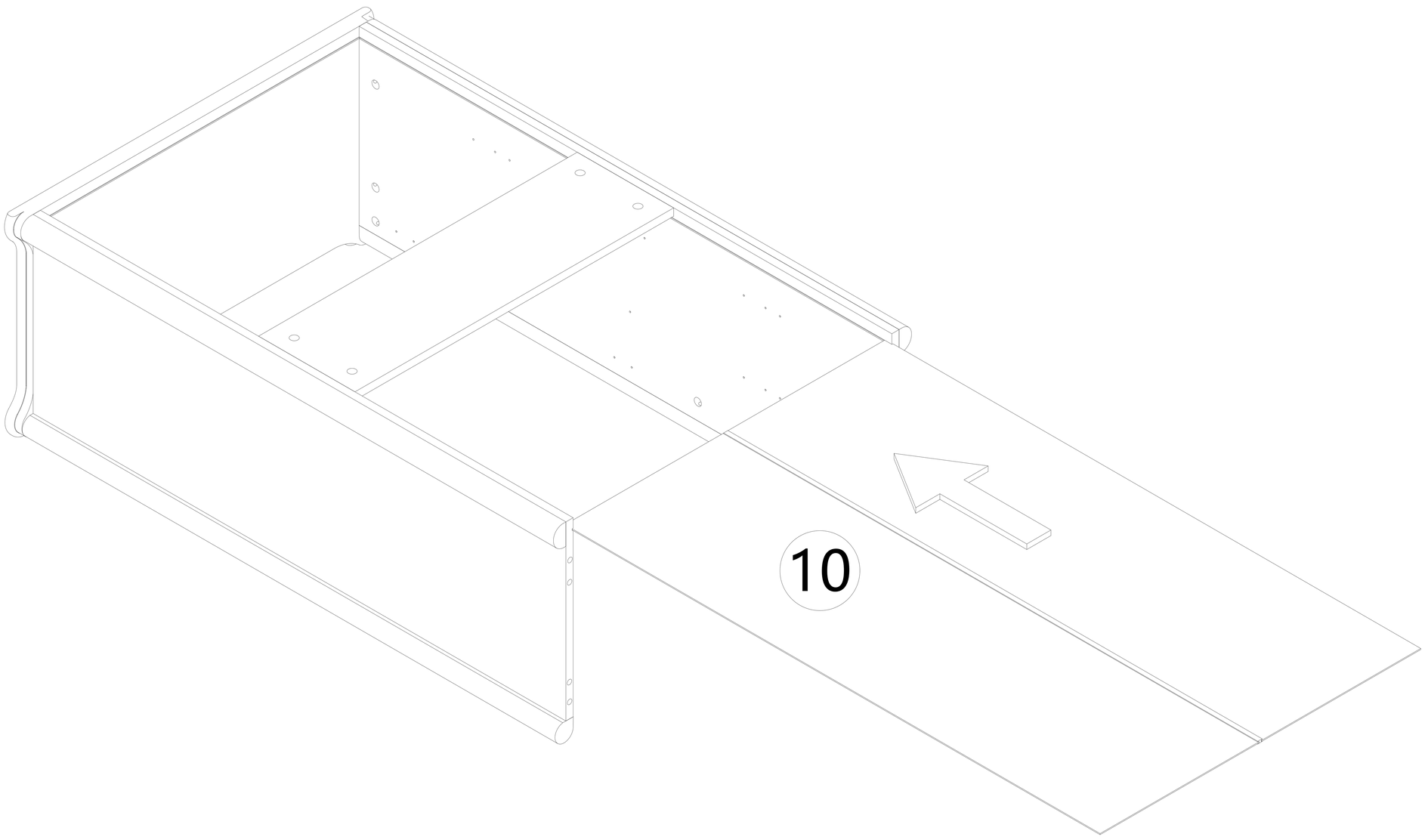

Step 6

A1		A2	
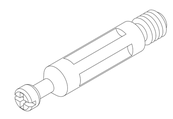	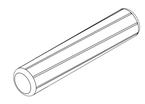 8 x 40MM		
A ×4PCS	B ×4PCS	A ×4PCS	L ×1PC

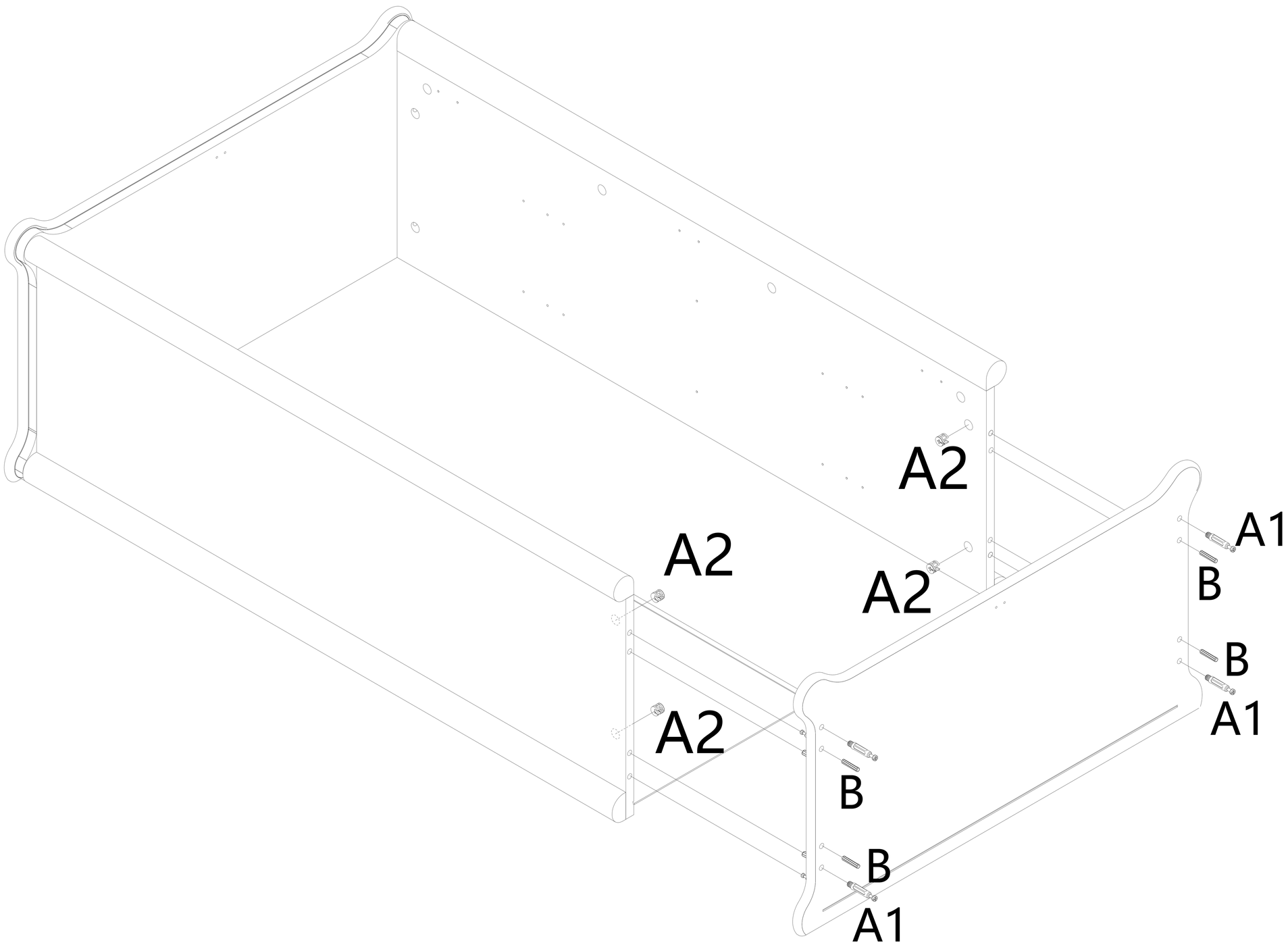

Step 7

A1	8 x 40MM	M8 x 40MM	
A ×8PCS	B ×6PCS	C ×4PCS	L ×1PC

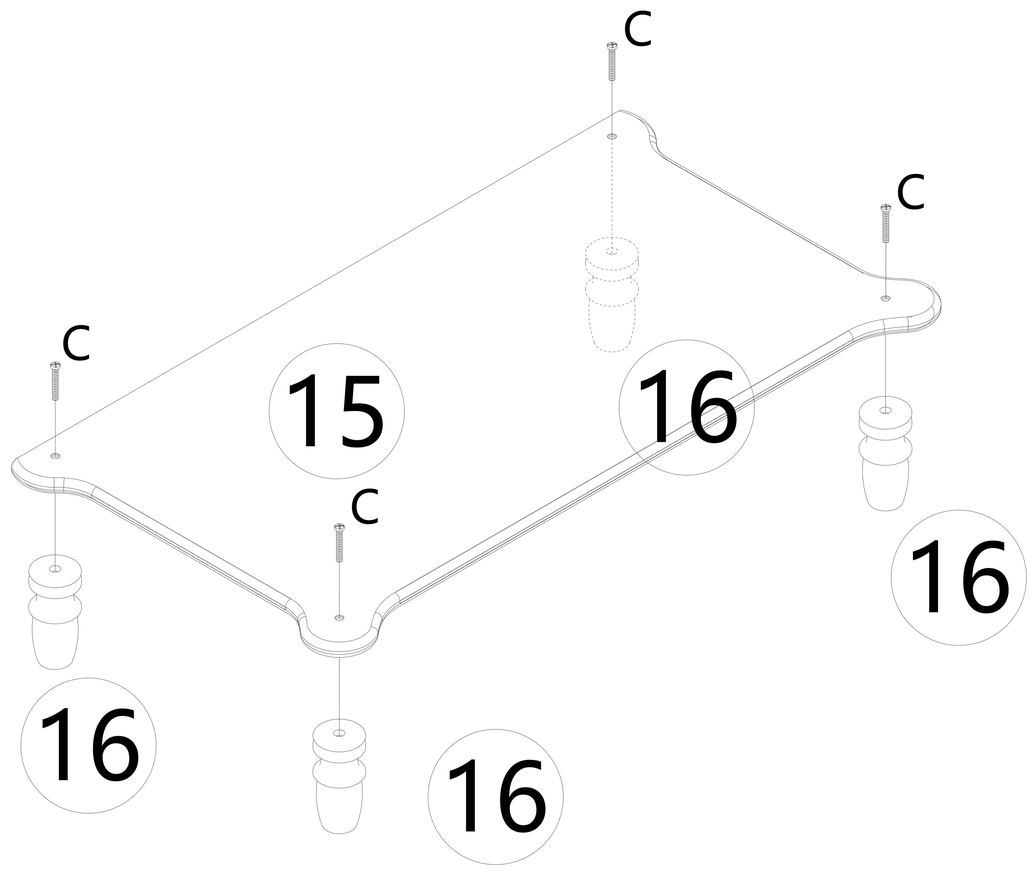

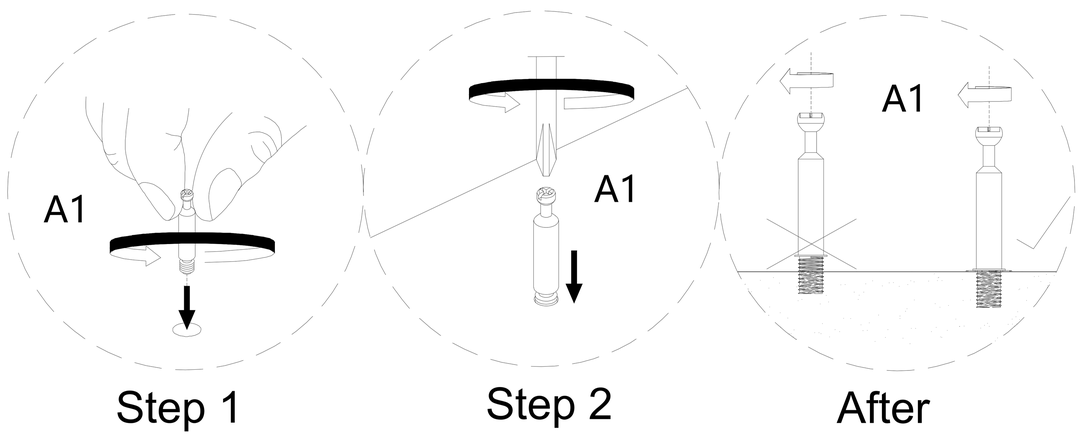

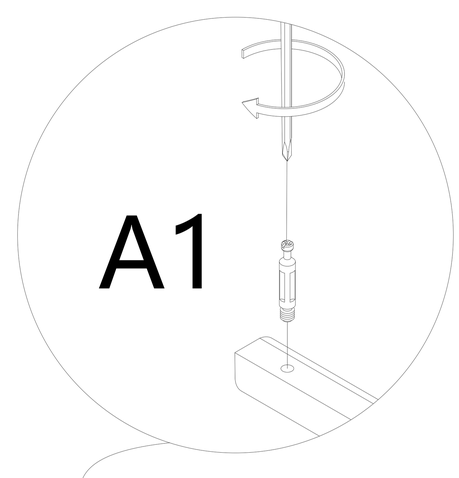

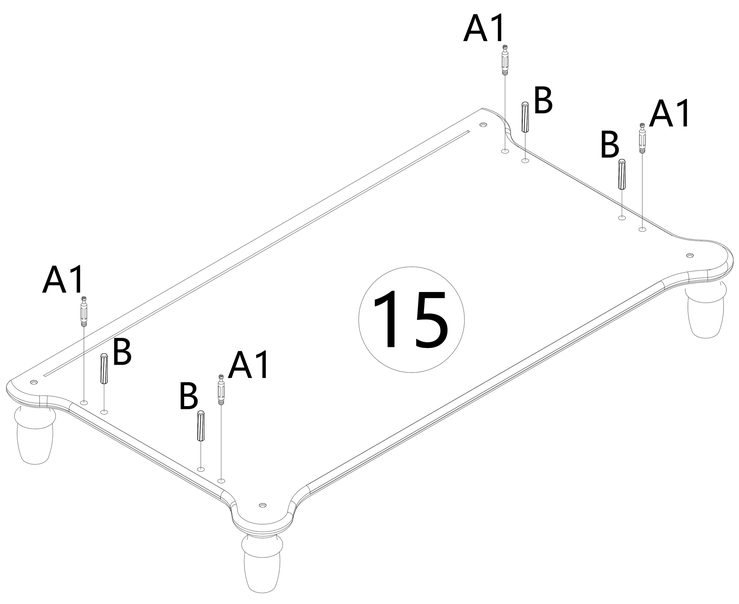

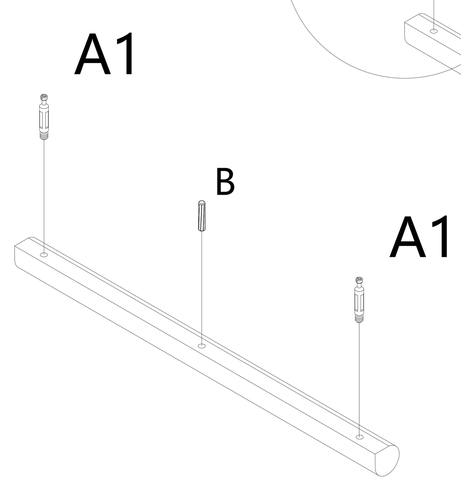

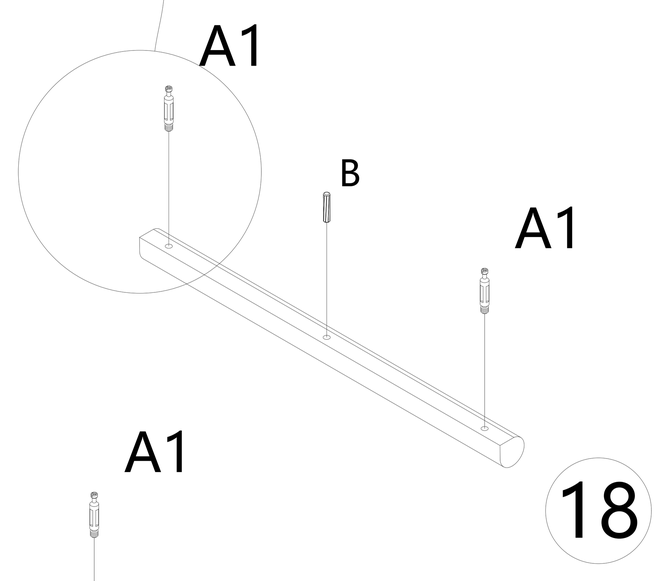

Step 8

A2	
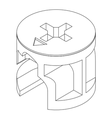	
(A) ×4PCS	(L) ×1PC

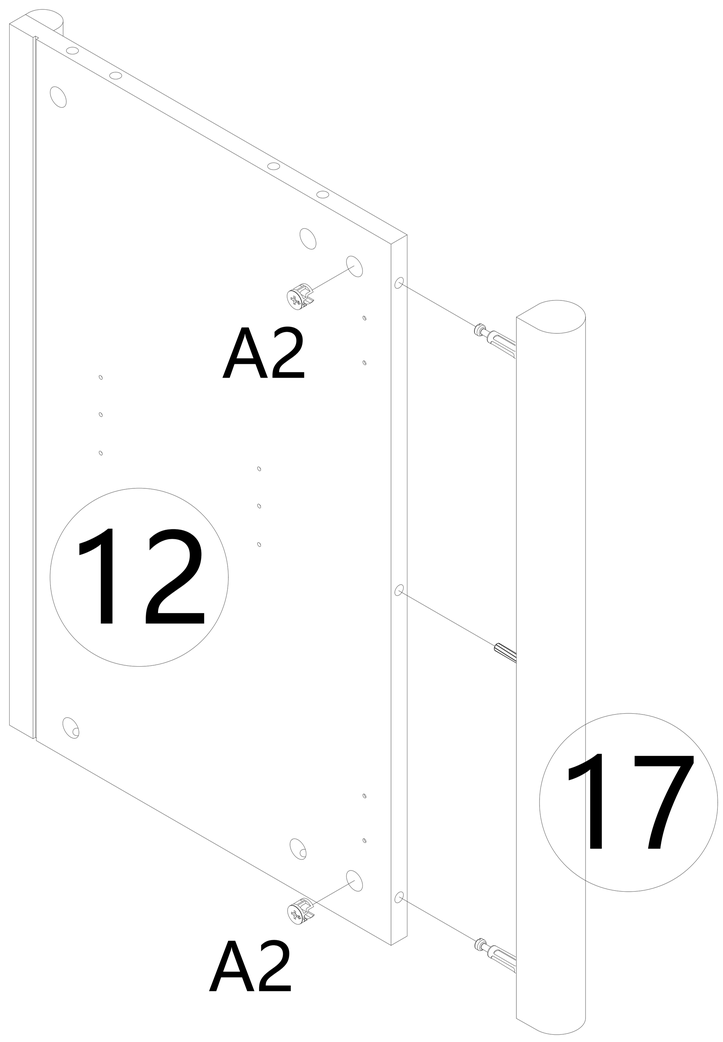

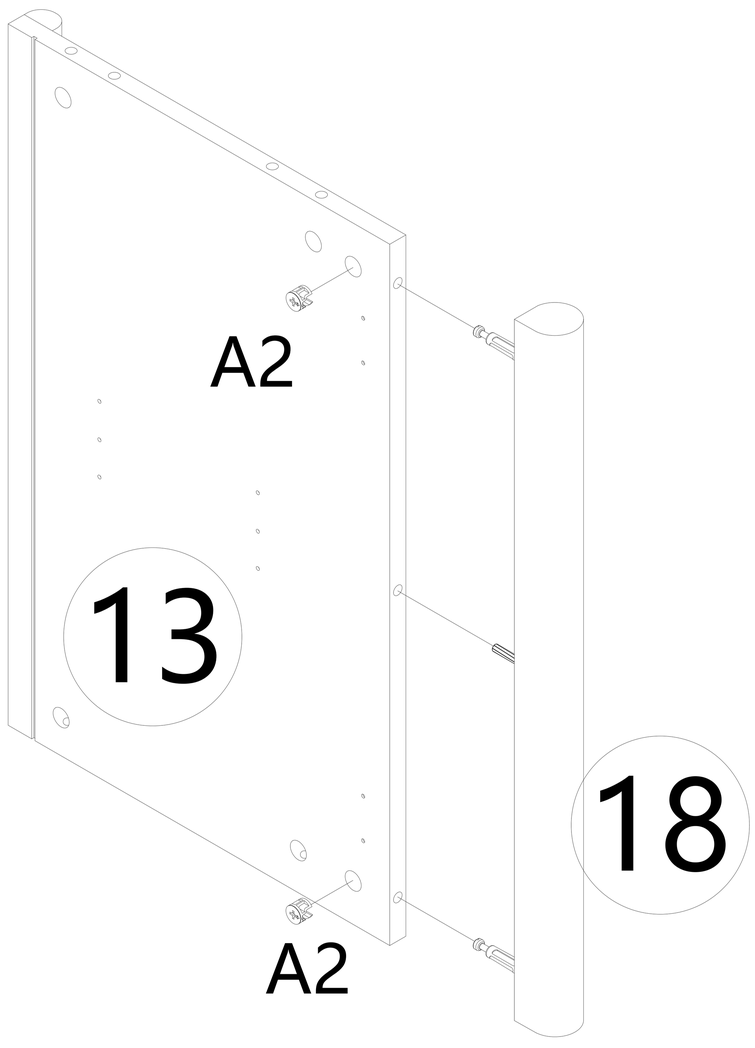

Step 9

A2	
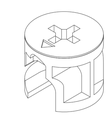	
(A) ×4PCS	(L) ×1PC

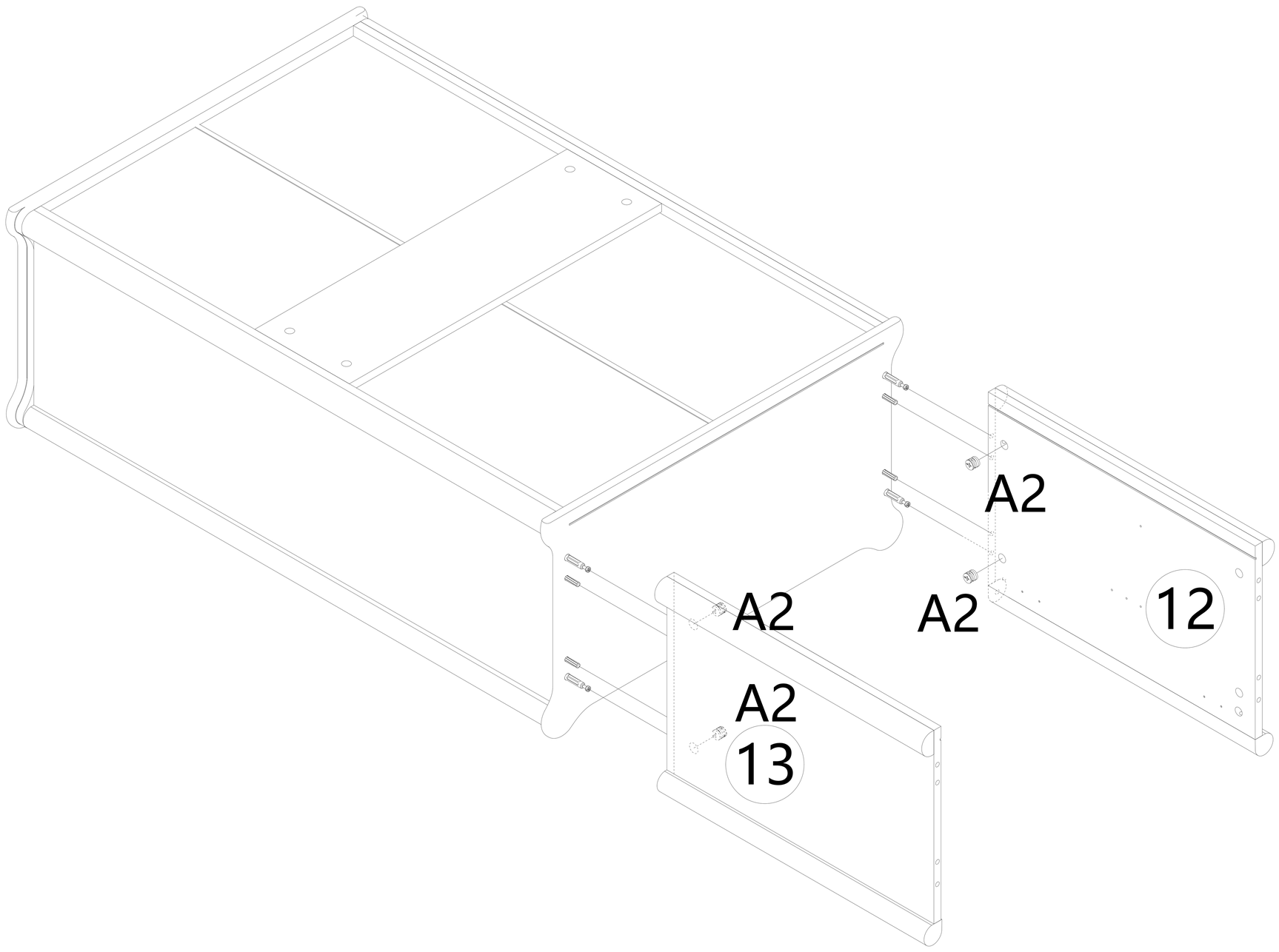

Step 10

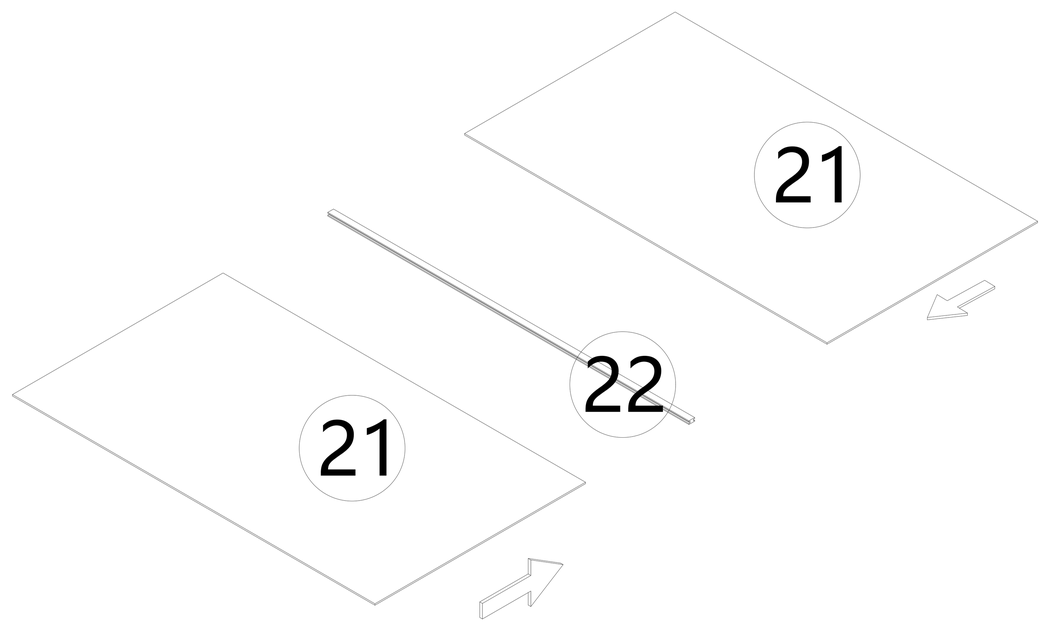

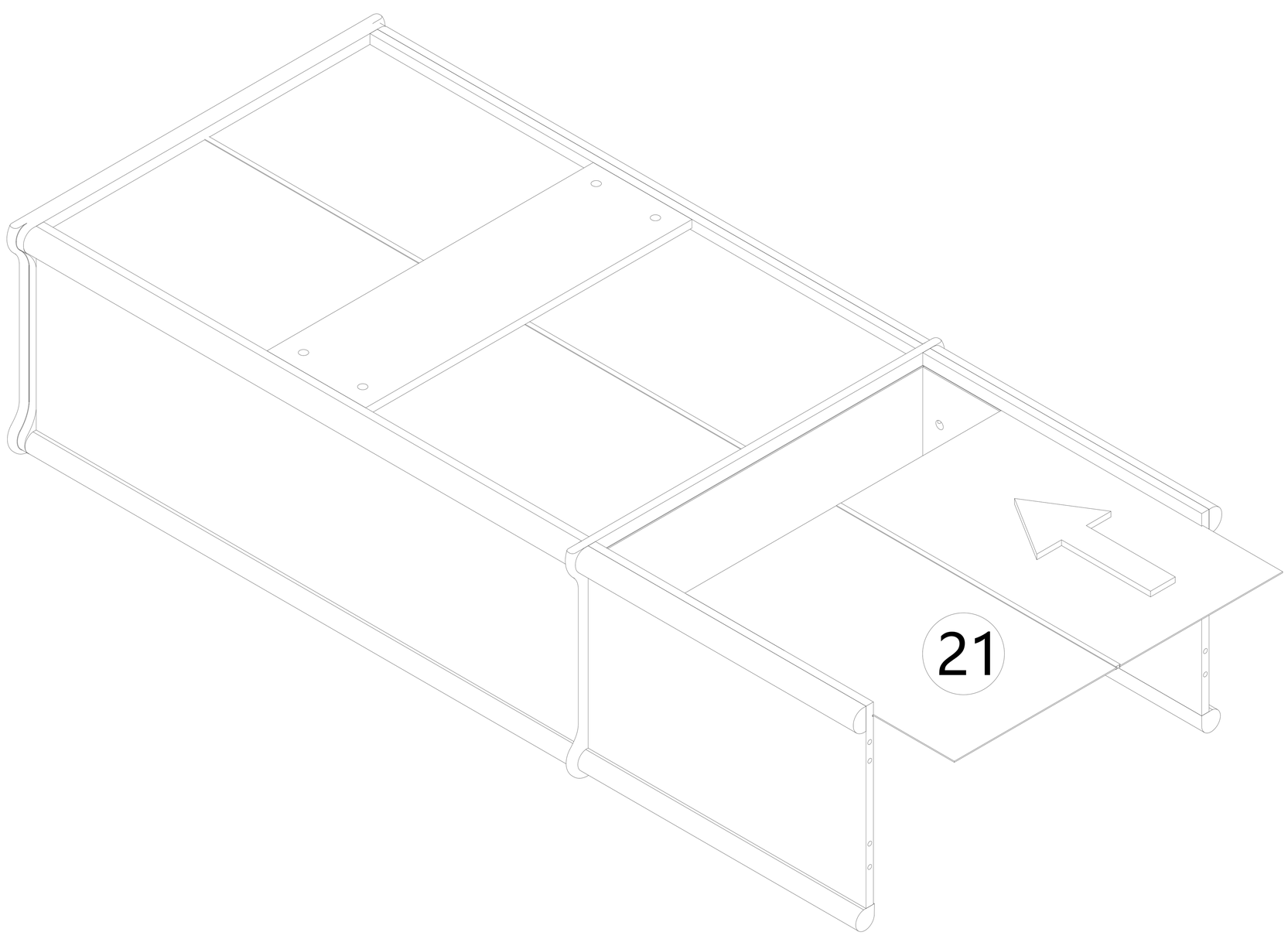

Step 11

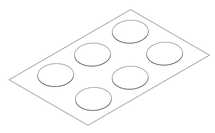		A2	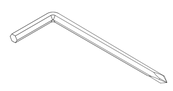
J ×32PCS	I ×4PCS	A ×4PCS	L ×1PC

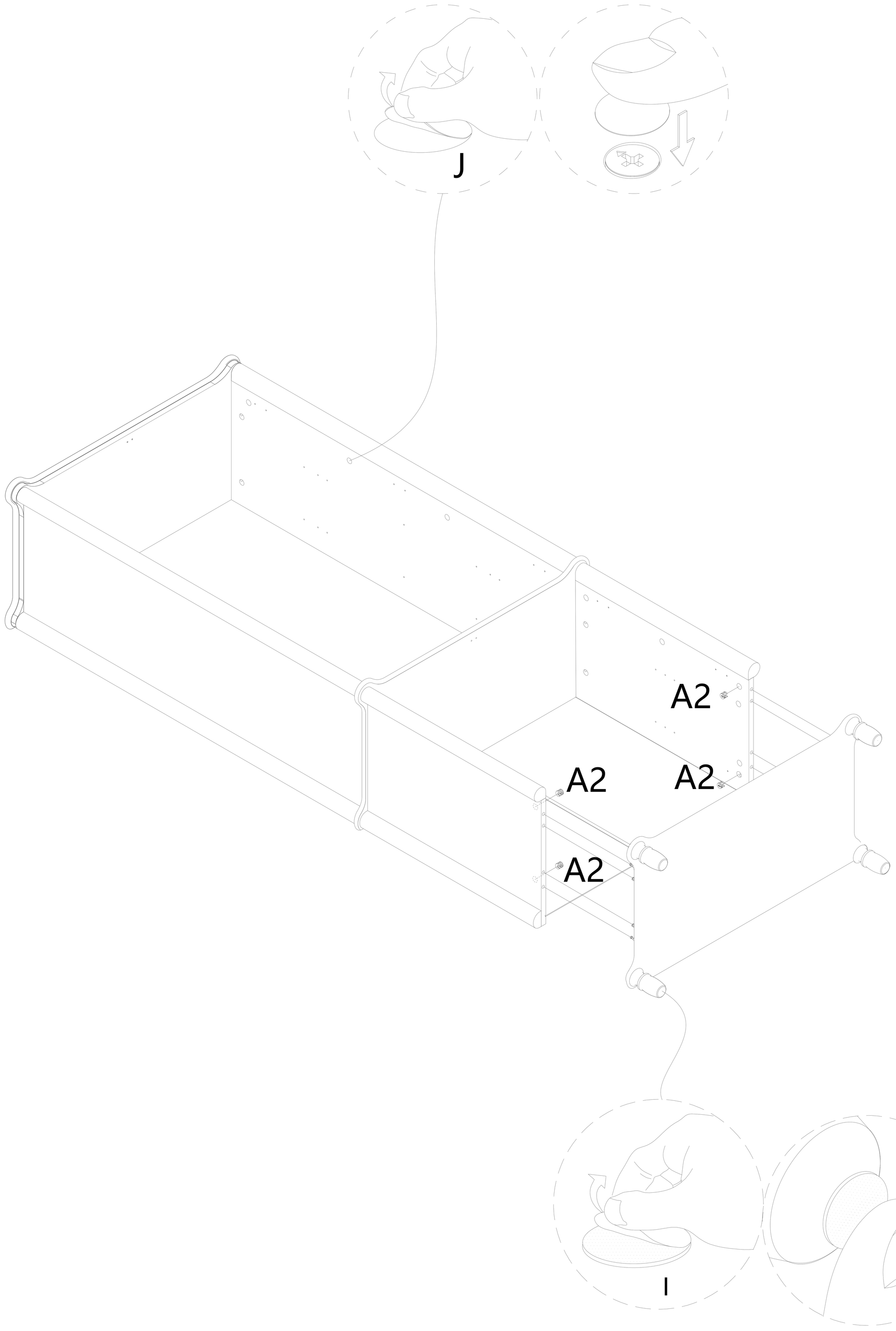

Step 12

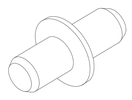

6MM

H ×16PCS

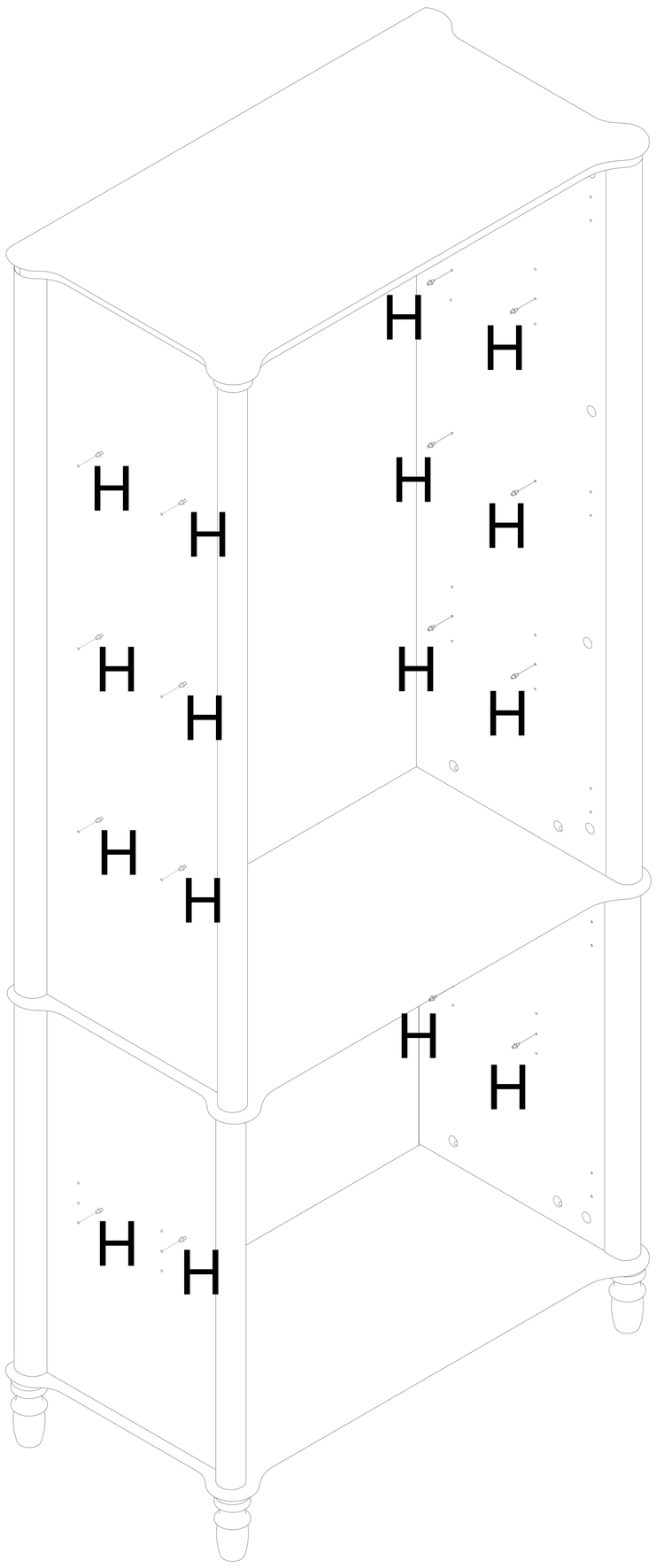

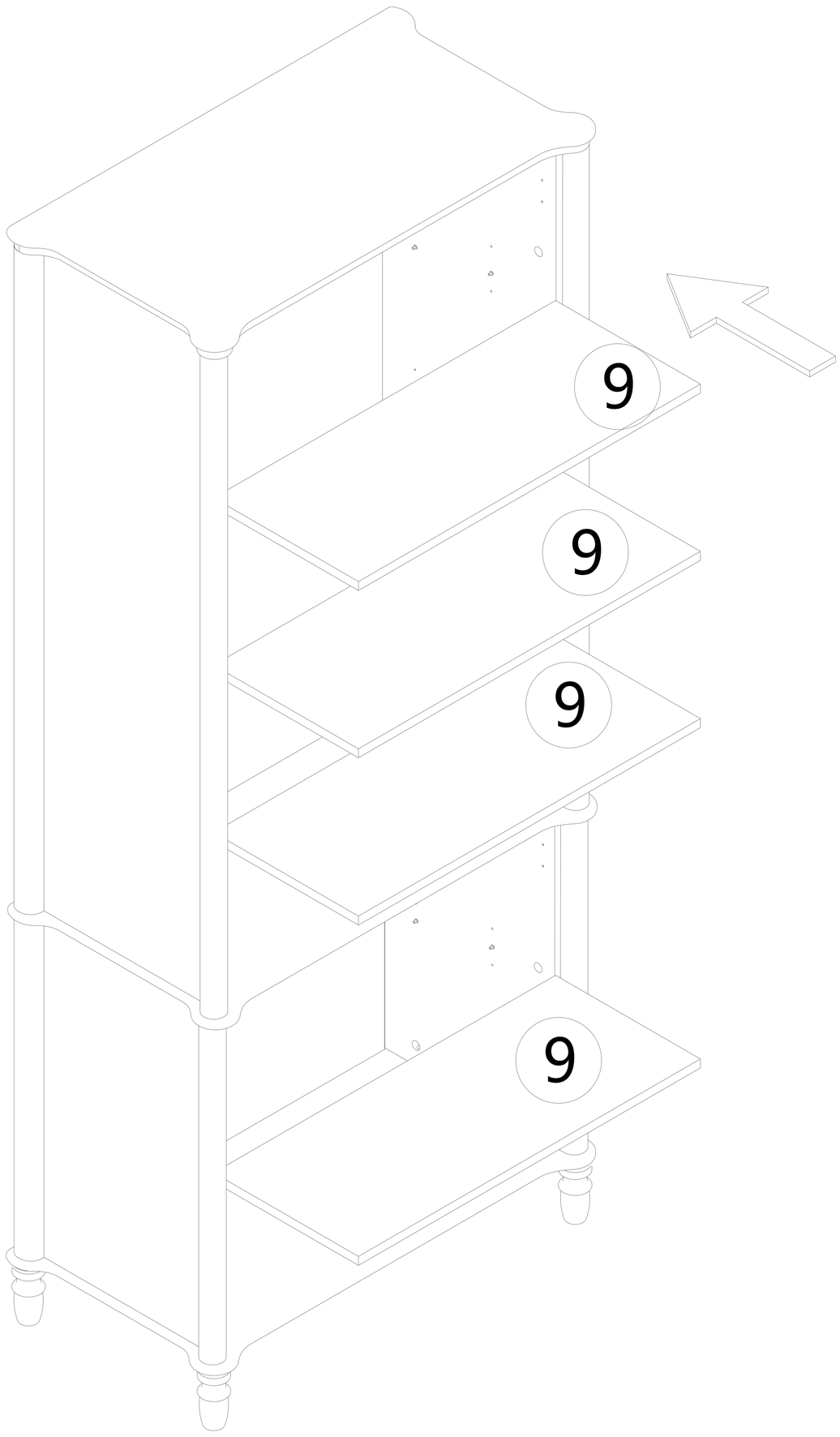

Step 13

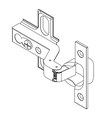		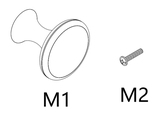
D ×10PCS	L ×1PC	M ×4STES
3.5 x 14MM		
E ×64PCS	F ×2PCS	

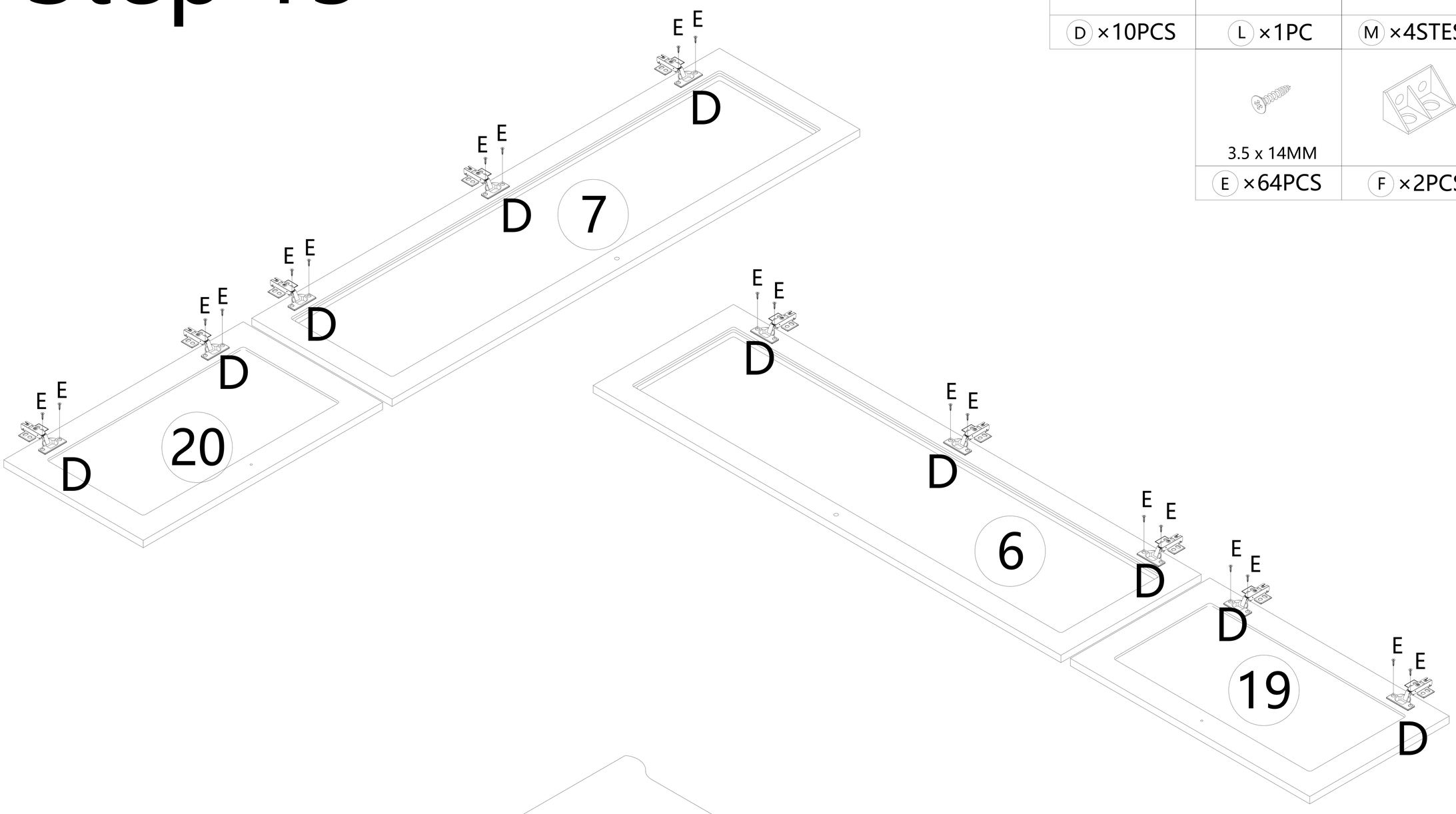

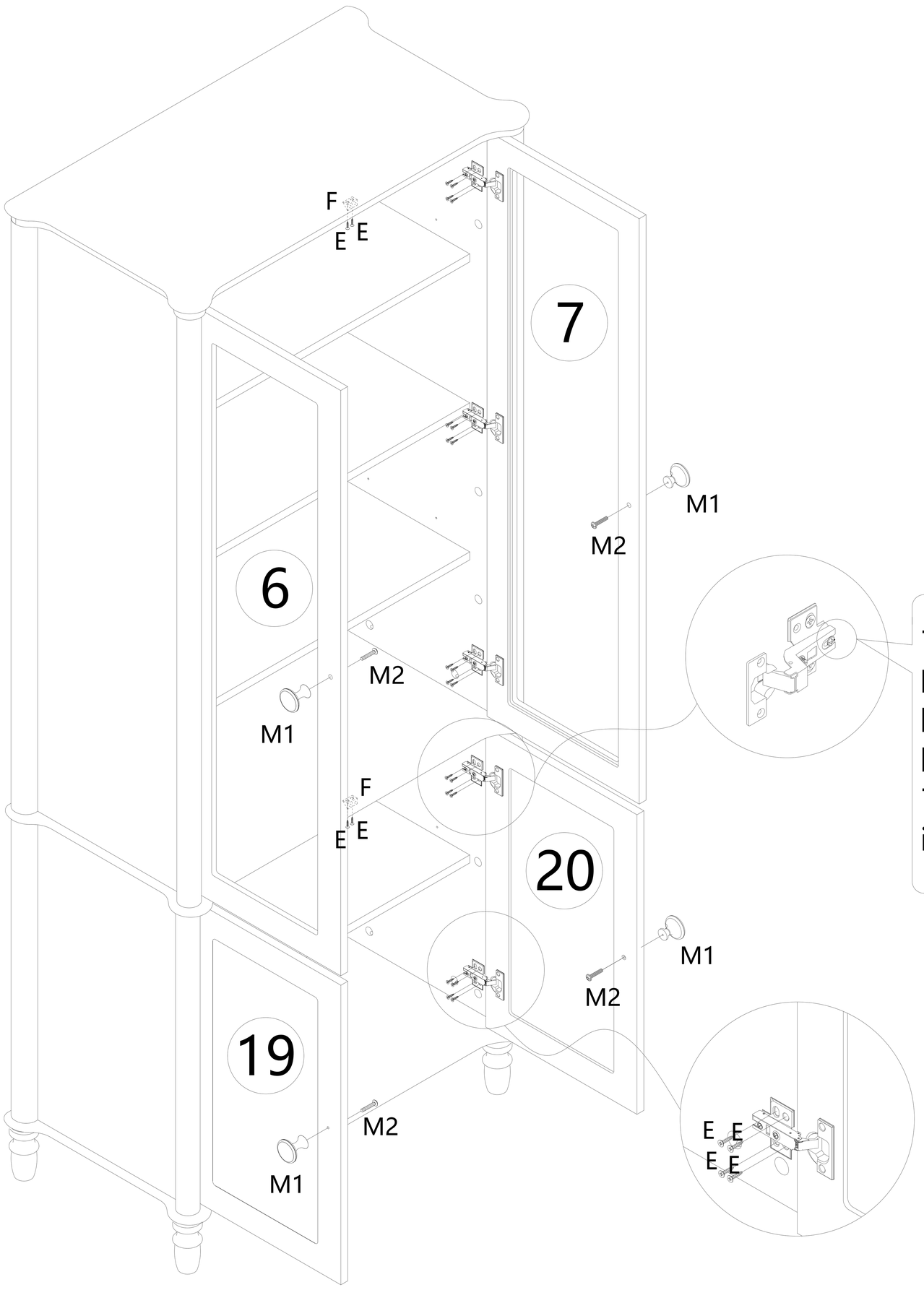

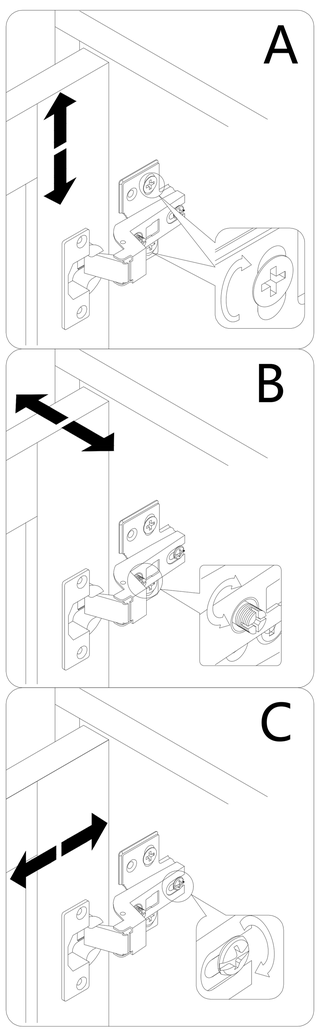
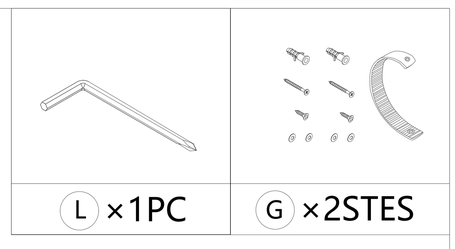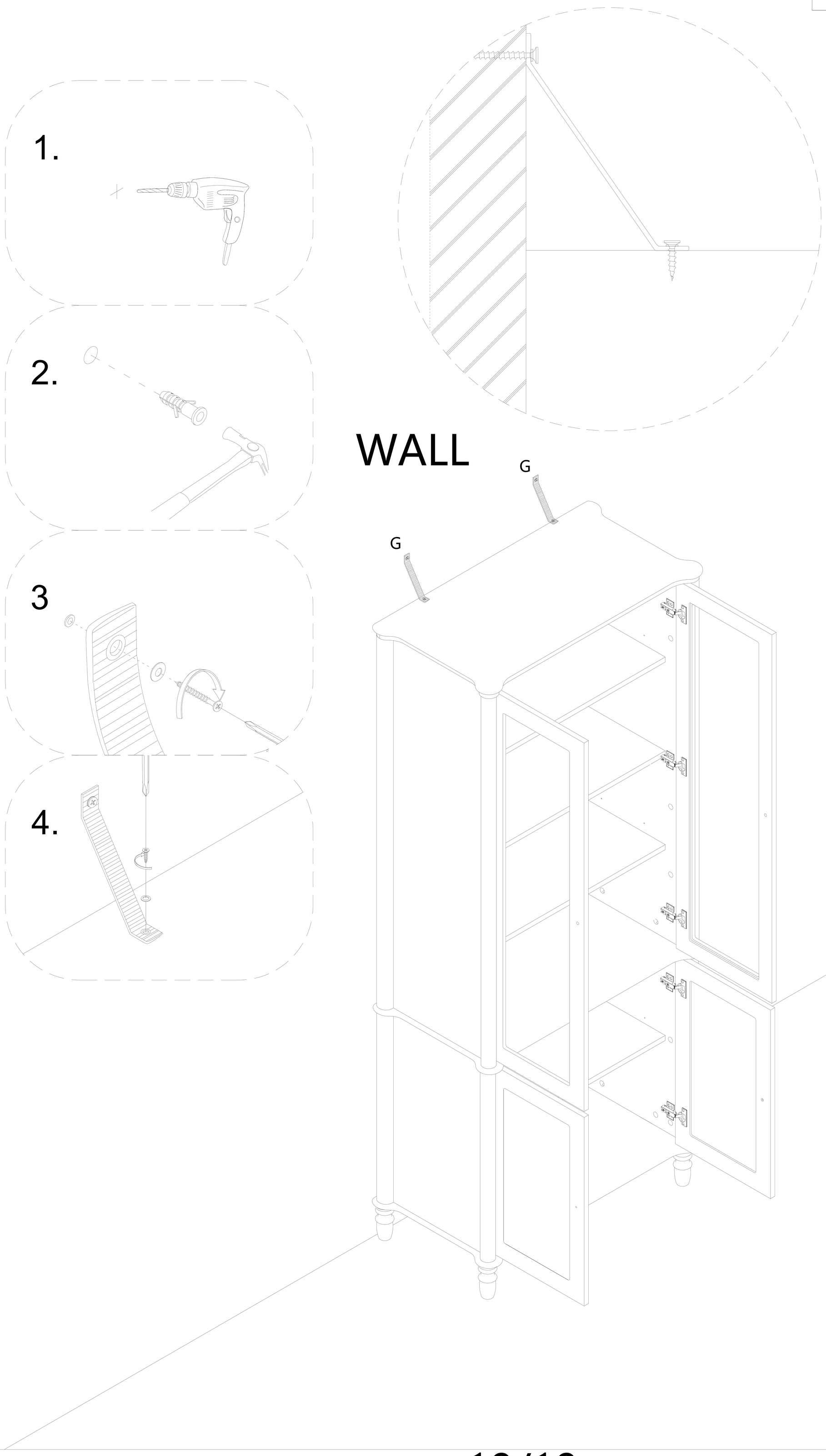
Step 14