PATIO SWING
ASSEMBLY INSTRUCTIONS
YS231105 SERIES



ATTENTION

Thanks for choosing our product.

1. Please check the manual carefully and make sure you have received all the parts.
2. If there is any missing parts, please let us know the letter of the parts you need.
3. If there is any damage parts, please send clear photos to us, we will check and offer you best solution soon.
4. There will be 1 box in total for this whole product.

Assembly Instruction

Parts List

A 	B 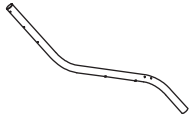	C 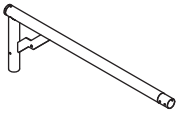	D 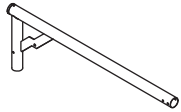
2 pcs	2 pcs	1 pc	1 pc
E 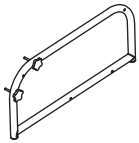	F 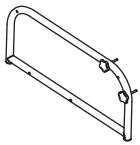	G 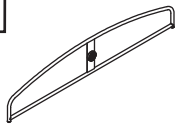	H 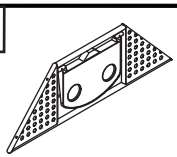
1 pc	1 pc	2 pcs	2 pcs
I 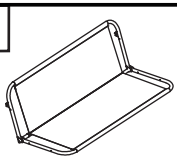	J 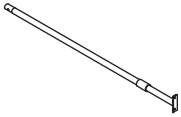	J1 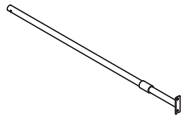	K
1 pc	1 pc	1 pc	2 pcs
K1	L 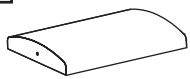	M 	N 
2 pcs	1 pc	3 pcs	2 pcs
N1 	W 	W1 	
2 pcs	4 pcs	2 pcs	

Assembly Instruction

Hardware List

O 	P  M8*65mm	Q  M8*40mm	R  M6*105mm
2 pcs	4 pcs	4 pcs	6 pcs
S  M6*60mm	T  M6*55mm	U  M6*30mm	V  M6*15mm
4 pcs	2 pcs	1 pc	8 pcs
V1  M6*40mm	X 	Y 	Z 
2 pcs	2 pcs	1 pc	1 pc

NOTE

1. If one or some screws are fully tightened during assembly, the other screws may not be aligned with screw holes. 70% tighten before fastening all screws. Allen wrench is recommended instead of an electric drill.

2. If some screws are not aligned with holes during assembly, please loosen all the other screws to 70% and continue the assembly process.

3. If the items is not stable, please loosen all the screws, adjust it on a flat ground and tighten all the screws.

Patio Swing Assembly

Step 1	
	A*2
	B*2
	C*1
	D*1
	R*6
	T*2
	W*4

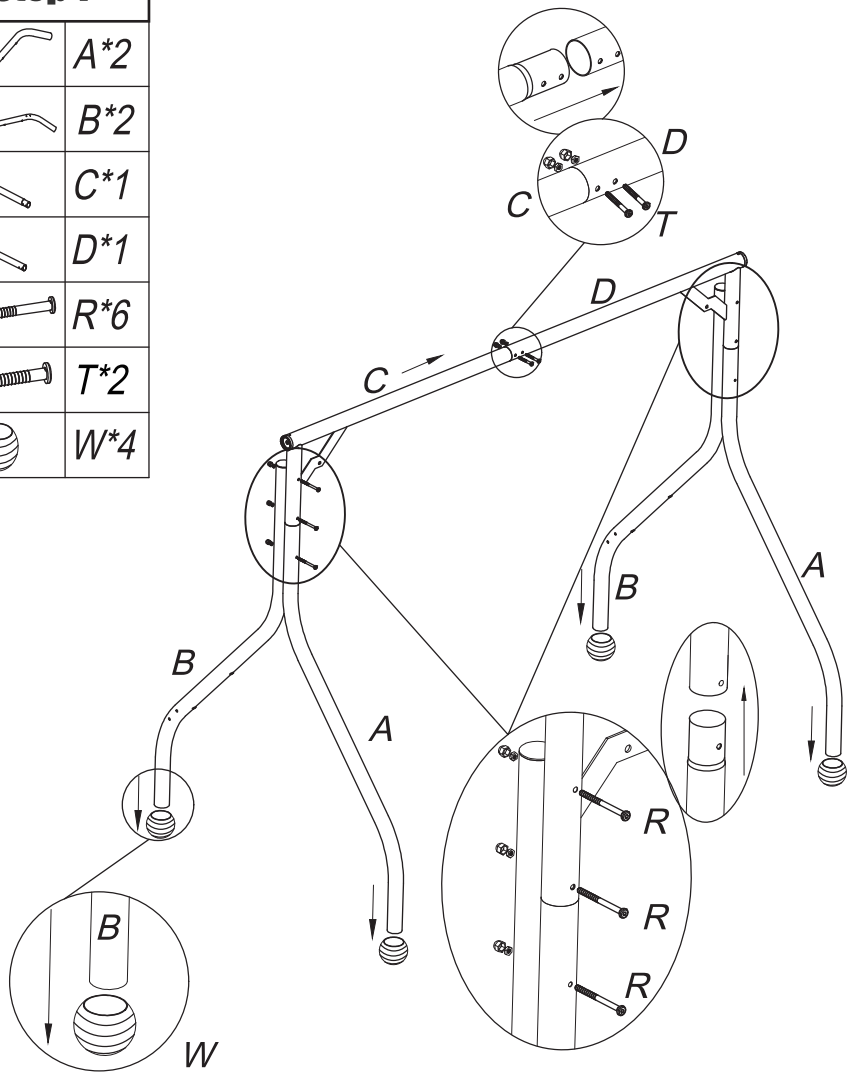

Patio Swing Assembly

Step 2

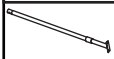	J*1
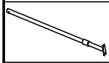	J1*1
	S*4
	U*1

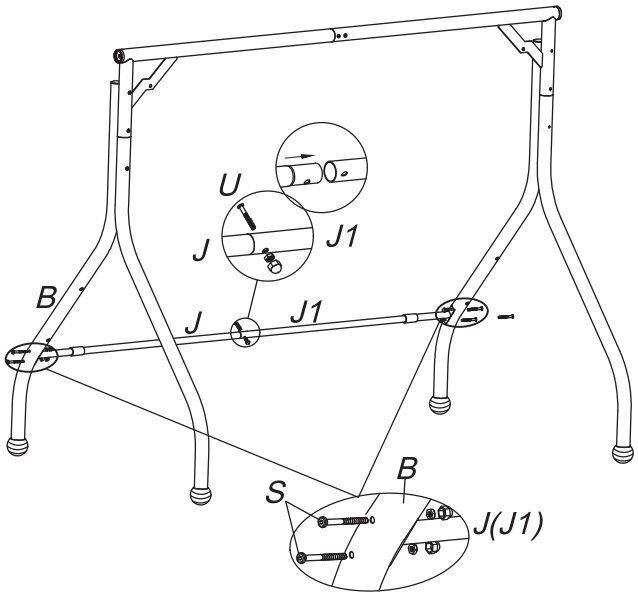

Step 3

	H*2
	V*8

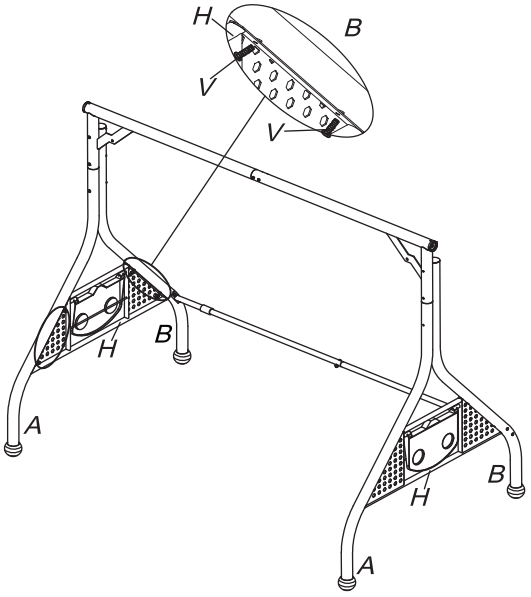

Patio Swing Assembly

Step 4	
	I*1
	E*1
	F*1
	K*2
	K1*2
	Q*4
	P*4
	V1*2
	X*2

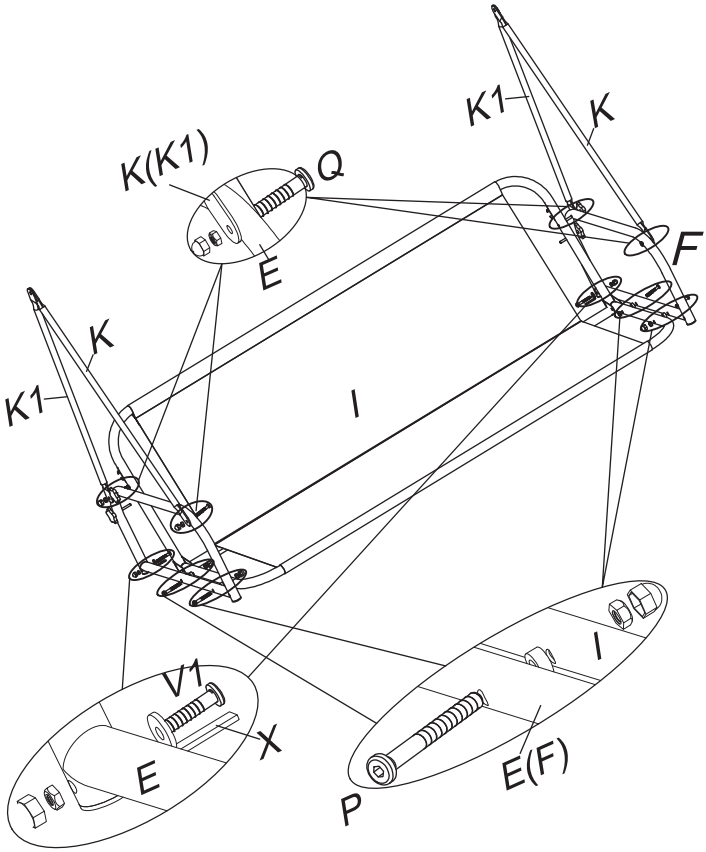

Suggestion: It is recommended that you install the suspender on both sides of the swing after finishing installing the handrail of the swing.

Patio Swing Assembly

Step 5	
	O*2

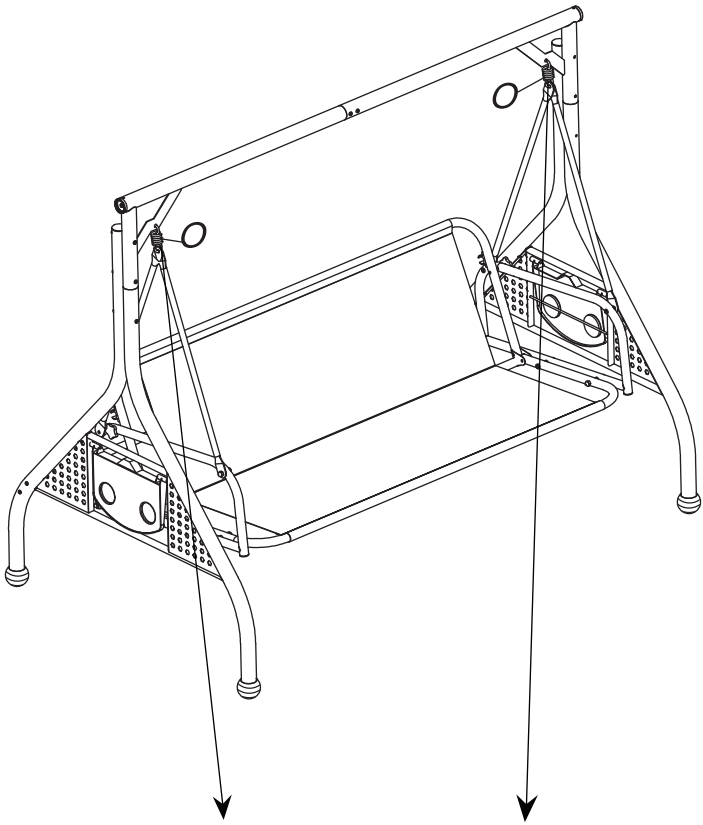

Suggestion: It is easier and faster to do this step with two people.

Patio Swing Assembly

Step 6	
	G*2
	L*1
	W1*2

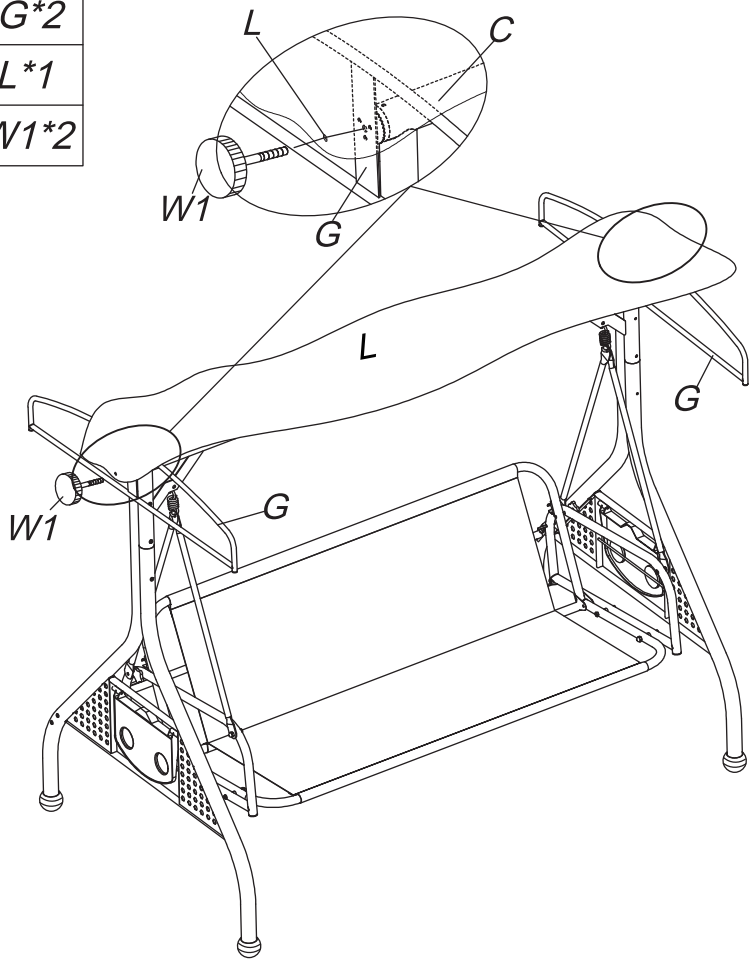

This step needs two people to install the fabric canopy of the swing.
It is recommended to first align the screw holes with the W1 part and tighten.
Then put the shade cloth over the top frame.

Patio Swing Assembly

Step 7	
	M*3
	N*2
	N1*2

Patio Swing Assembly

Step 8

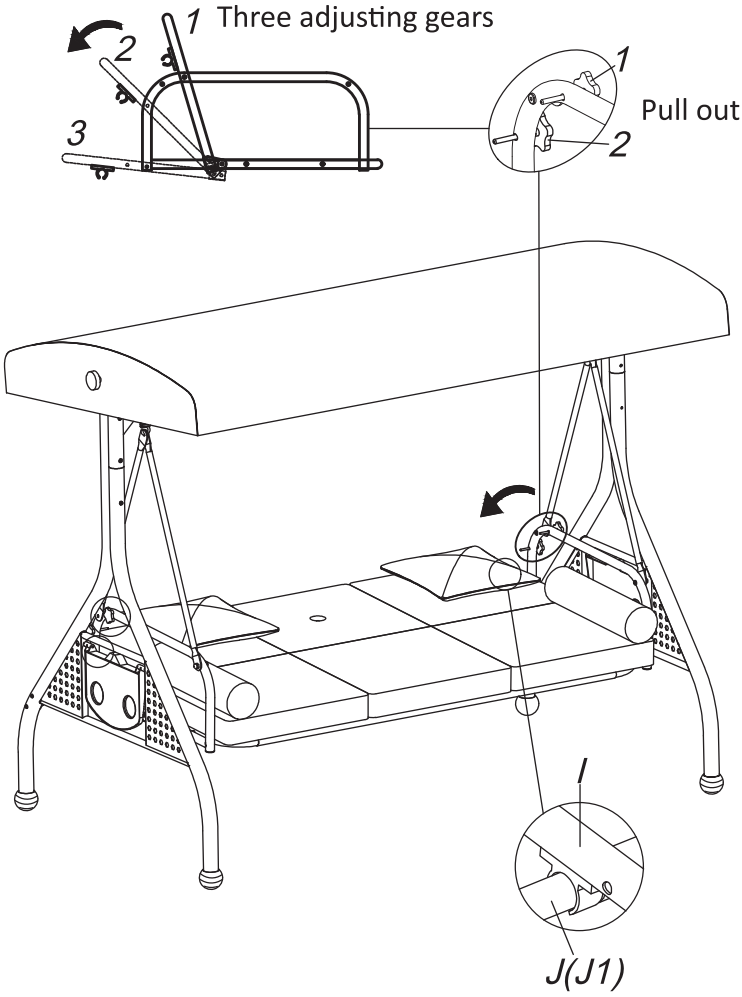

CONTACT US

If you order products on our store:

Please contact our service team if you need help. The service email is xinshenga202311@163.com.
(Guaranteed response within 24 hours)

If you order our products on Amazon/Walmart/Wayfair etc.
Log in Amazon/Walmart/Wayfair etc. to contact the seller.
Order>Sold By>Contact Seller

WARRANTY

So glad you have completed the assembly and can enjoy it.
If you are satisfied with our products, thank you for showing your favored PATIO SWING to your around.

Customer Service:

Any problem with the product or shipping issue, please feel free to contact us, we will try our best to serve and help.