BATHLYN
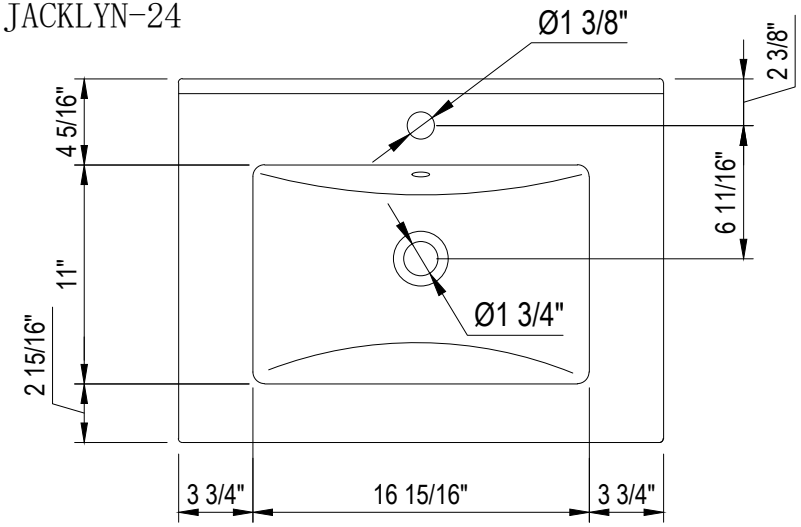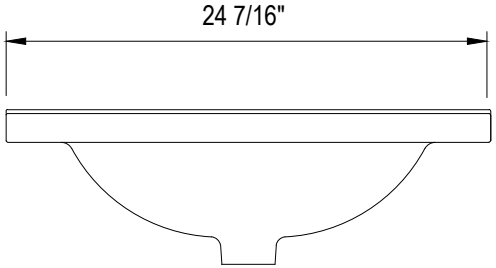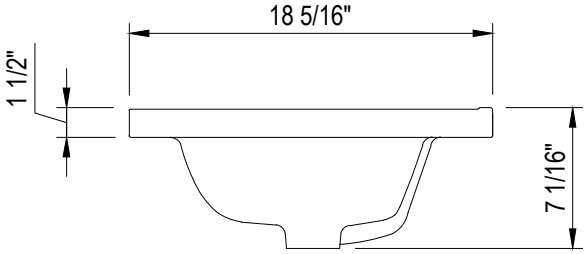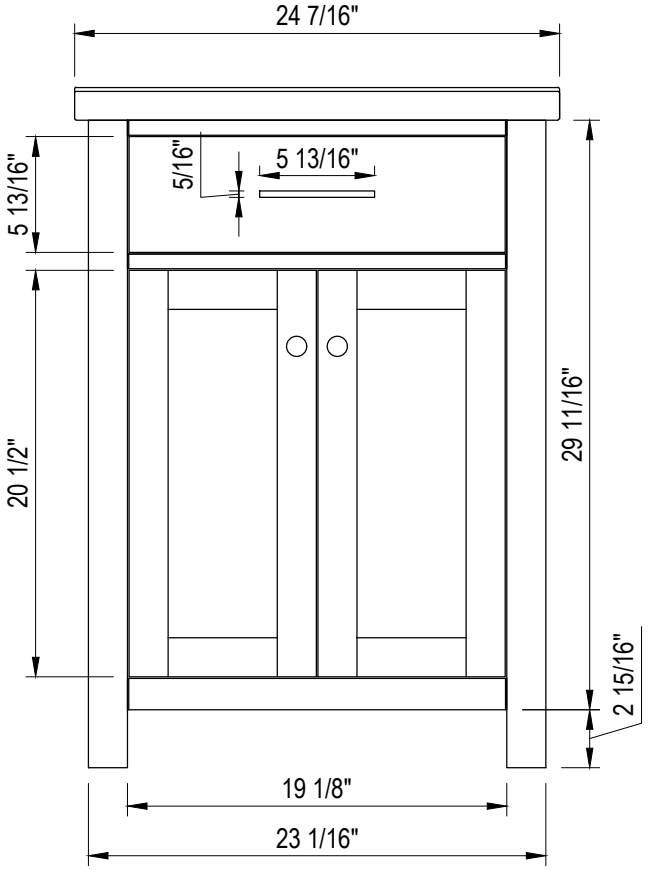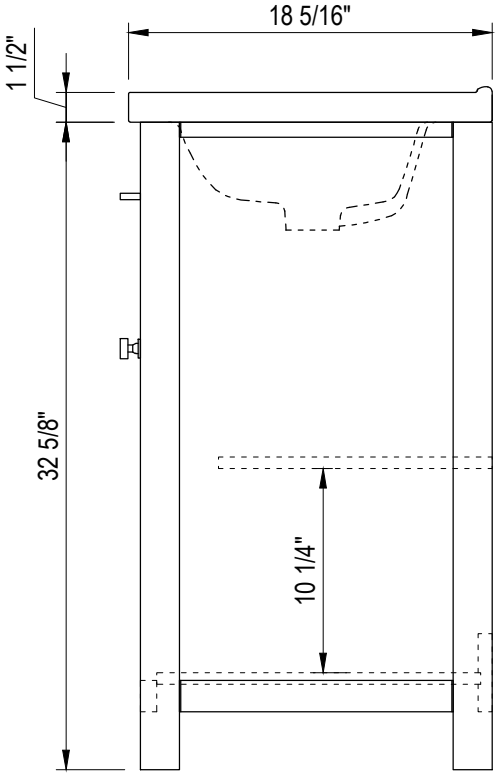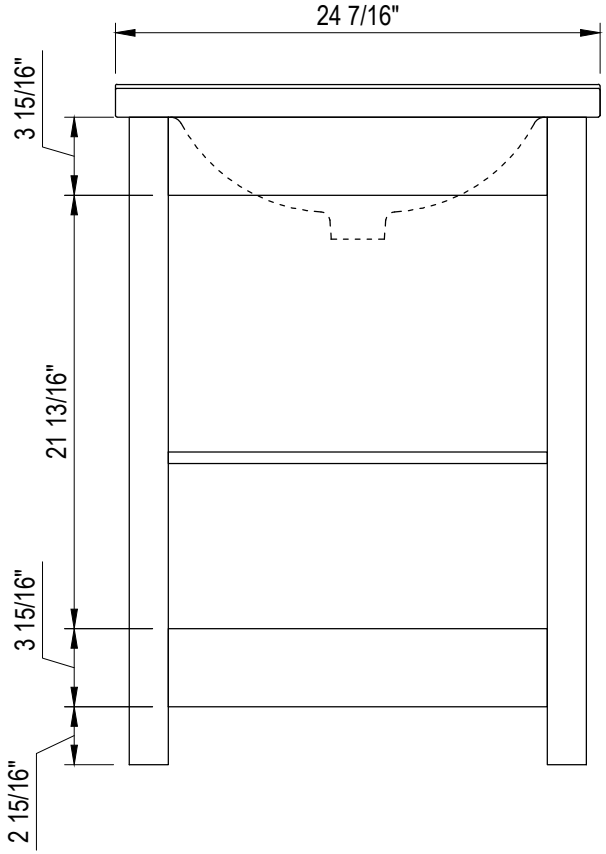
JACKLYN-24