ASSEMBLY INSTRUCTION

DESCRIPTION : WRITING DESK

Thank you for purchasing this quality product. Be sure to check all packing material carefully for small Hardware which may have come loose inside the carton during shipment. Identify and count all Hardware and compare with the Hardware List Below.

Parts List			
No.	Description		Qty.
①	Table Top		1 Pc
②	RSF Leg		2 Pcs
③	LSF Leg		2 Pcs
④	Stretcher		2 Pcs

Assembly Hardware Pack			
	⑤		
No.	Description	Hardware	Qty.
Ⓐ	JCBC Screw Ø5/16" x 57mm		8 Pcs
Ⓑ	Spring Washer Ø5/16"		8 Pcs
Ⓒ	Flat Washer Ø5/16" x 19mm		8 Pcs
Ⓓ	Allen Key M4		1 Pc
Ⓔ	Screw M4 x 51mm		4 Pcs

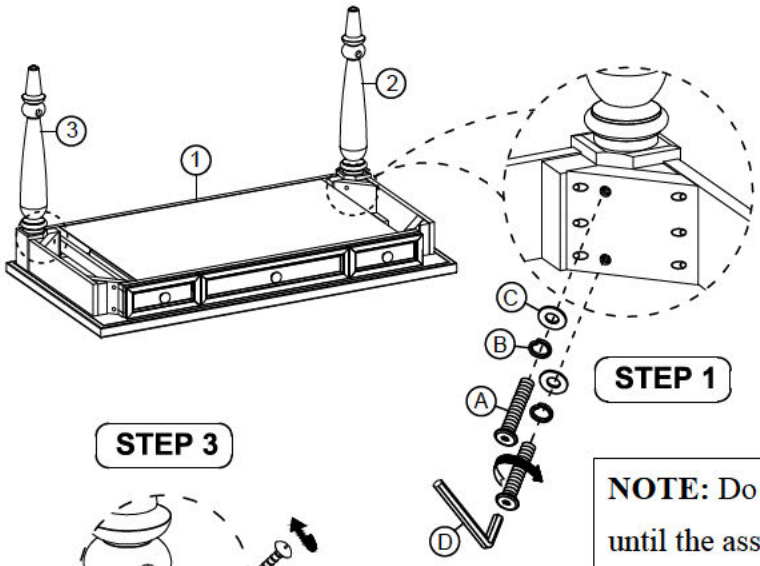

STEP 1

NOTE: Do not fully tighten Bolts until the assembly is completed.

STEP 3

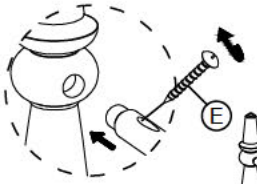

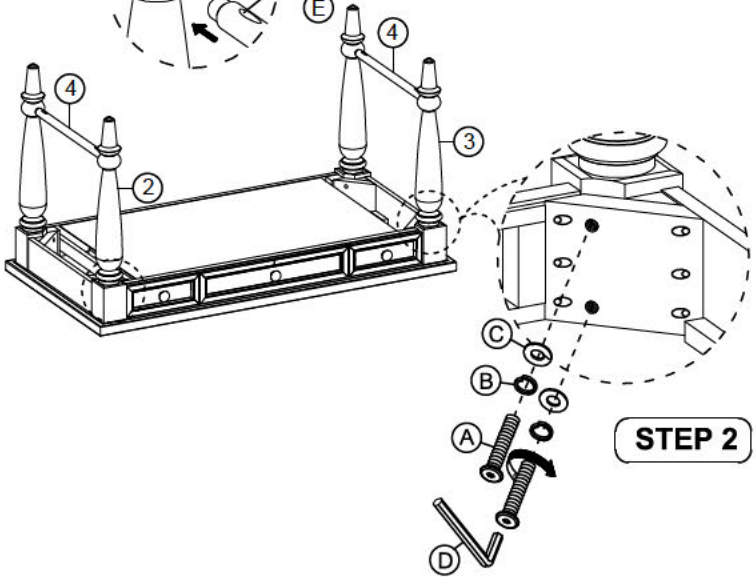

STEP 2

DRAWER REMOVAL GUIDANCE

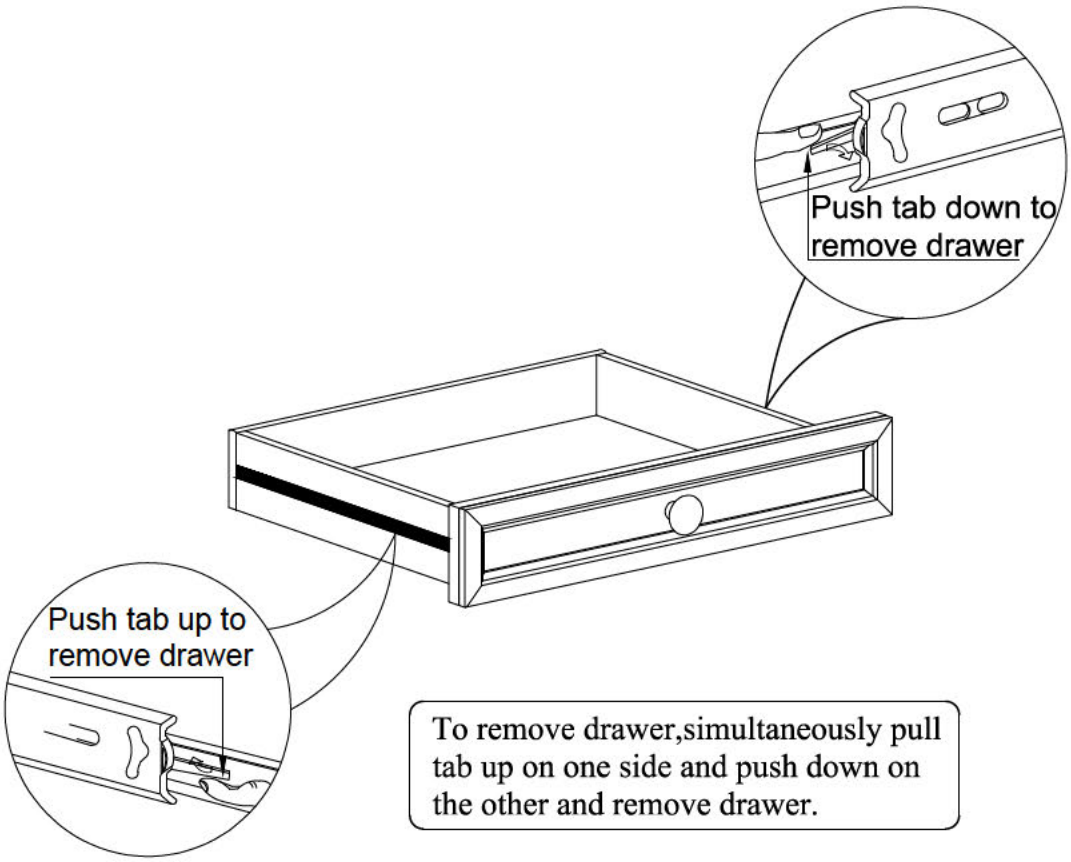

To remove drawer,simultaneously pull tab up on one side and push down on the other and remove drawer.