ASSEMBLY INSTRUCTION

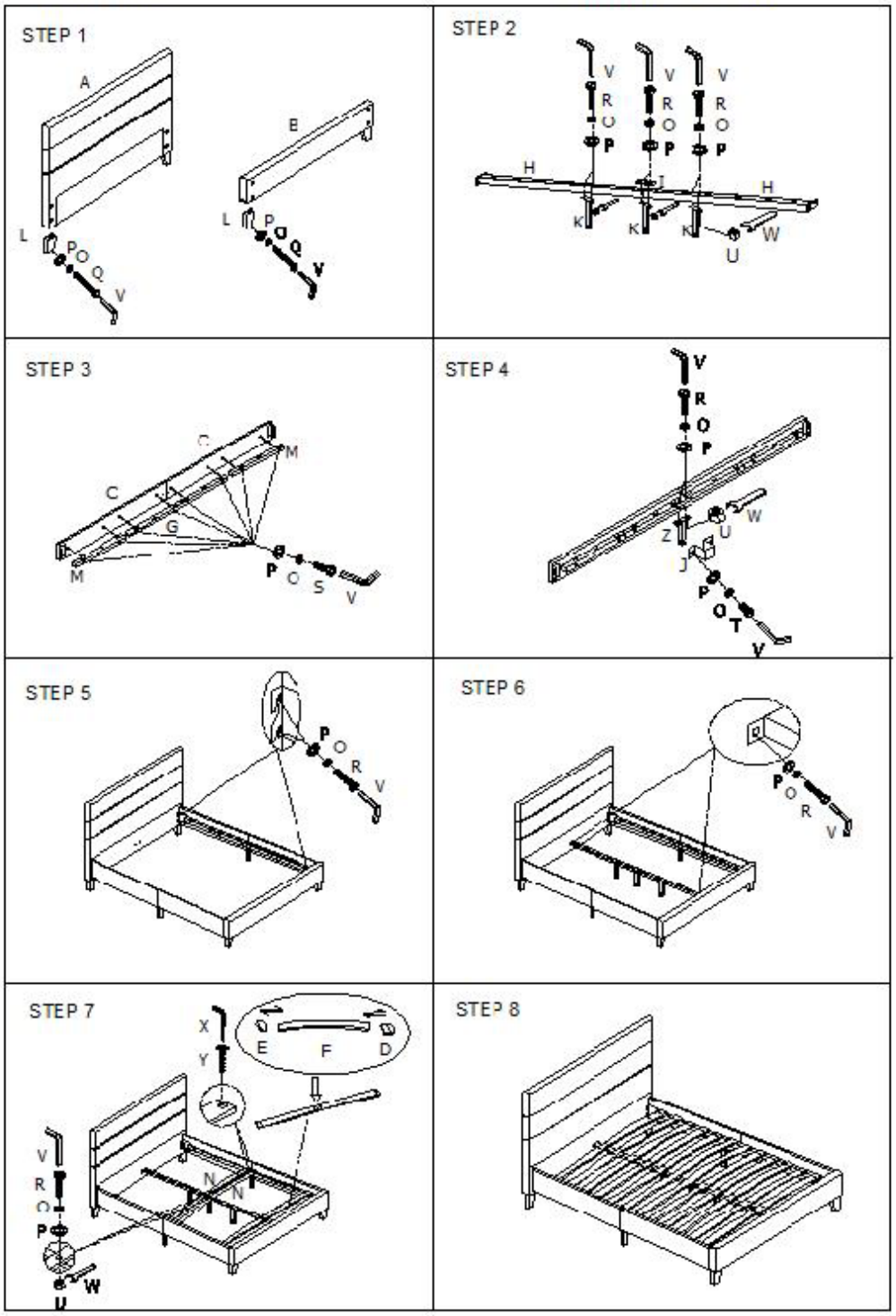

PAGE 2 OF 2