ASSEMBLY INSTRUCTION

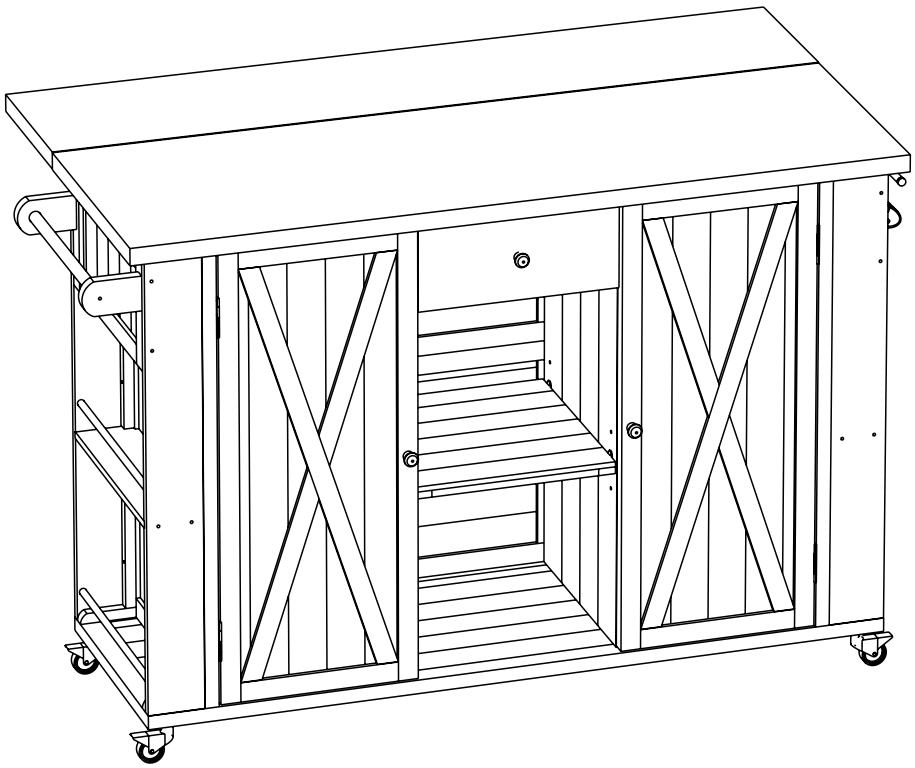

IMPORTANT NOTE:

① PLACE ALL PARTS ON A CLEAN AND SMOOTH SURFACE SUCH AS A RUG OR CARPET TO AVOID THE PARTS FROM BEING SCRATCHED.

② BEFORE YOU BEGIN,KINDLY FOLLOW THE ASSEBLY INSTRUCTIONS STEP BY STEP.

③ DO NOT TIGHTEN ALL SCREWS AND BOLTS UNTIL THIS ITEM IS FULLY SET-UP.

Detail View

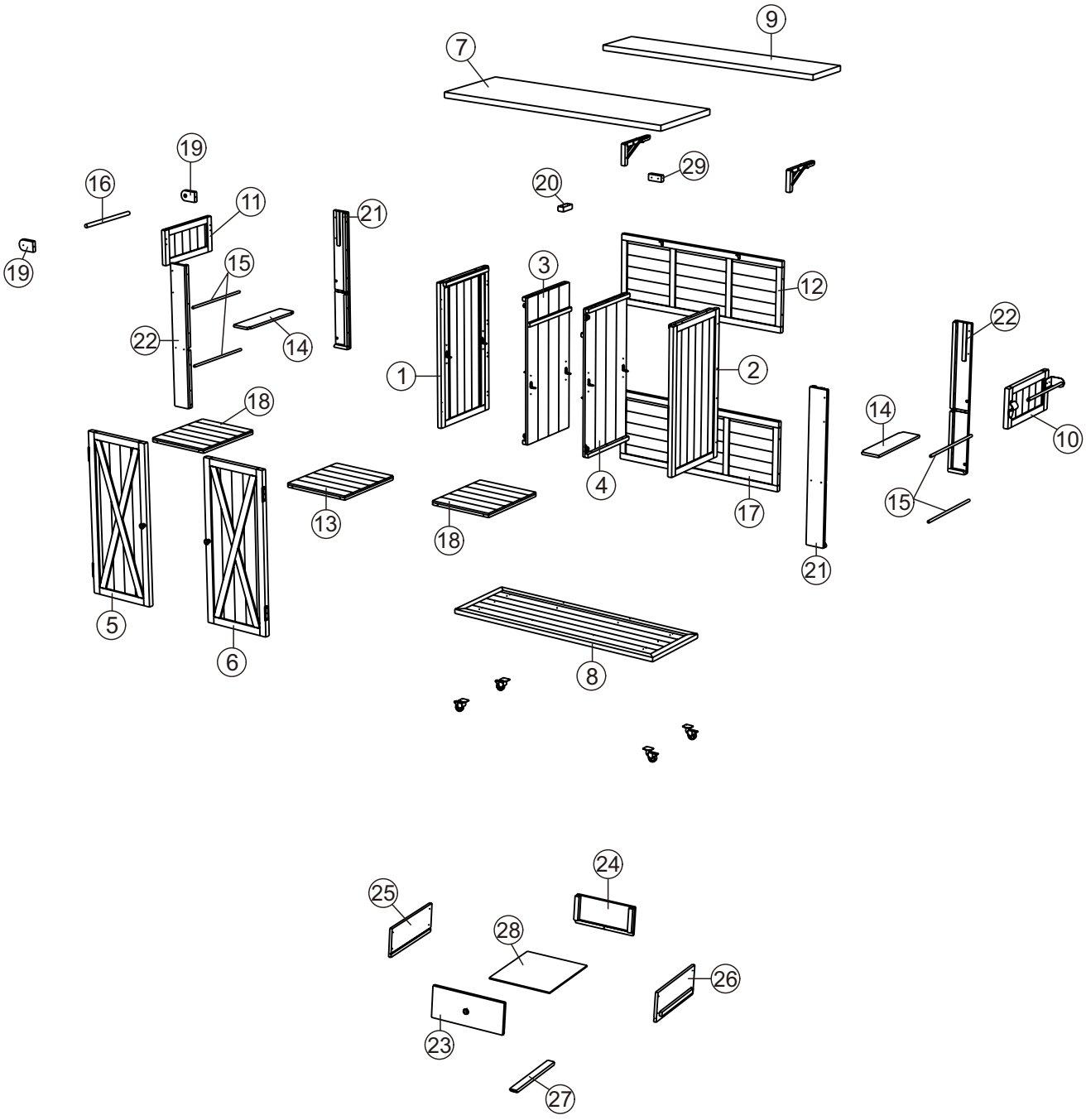
9
7
29
20
19
16
11
21
19
15
3
12
22
14
1
2
22
18
14
10
4
17
15
13
18
21
5
6
8
24
25
28
26
23
27

1 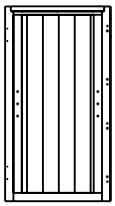 1pc	2 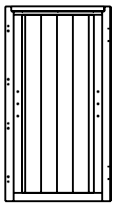 1pc	3 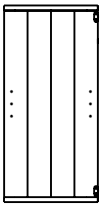 1pc	4 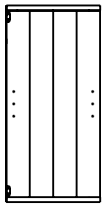 1pc
5 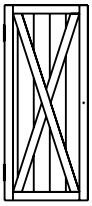 1pc	6 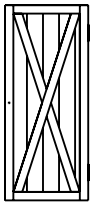 1pc	7 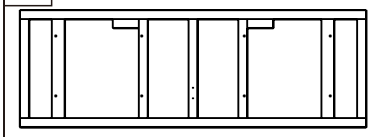 1pc	8 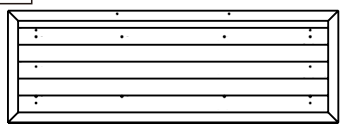 1pc
9 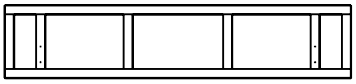 1pc	10 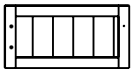 1pc	11 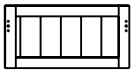 1pc	12 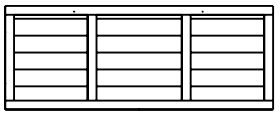 1pc
13 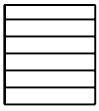 1pc	14 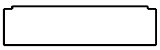 2pcs	15 4pcs	16 1pc
17 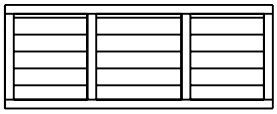 1pc	18 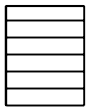 2pcs	19  2pcs	20  1pc
21  2pcs	22  2pcs	23  1pc	24  1pc
25 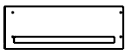 1pc	26 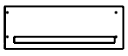 1pc	27 1pc	28 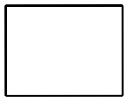 1pc
29  1pc			

Hardware List

A ⌀3.5*45 24pcs	B ⌀3.5*40 52pcs	C ⌀3.0*30 20pcs	D ⌀3.5*25 16pcs
E ⌀3.0*16 16pcs	F ⌀3.5*30 10pcs	G ⌀3.0*16 2pcs	H 27pcs
I 2pcs	J 12pcs	K 1pc	L 4pcs
M 3pcs	N 2pcs	O 1pc	

ASSEMBLY TOOLS REQUIRED(NOT INCLUDED)

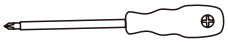



PLEASE BE CAREFUL DO NOT DAMAGE THE HOLE POSITION WHEN YOU USE POWERTOOLS !

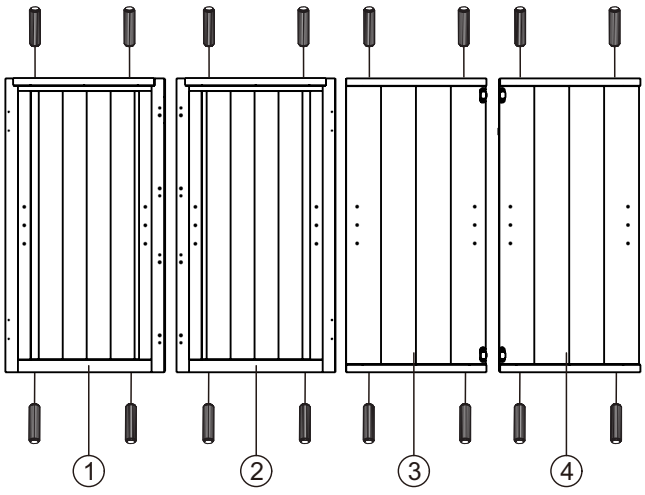

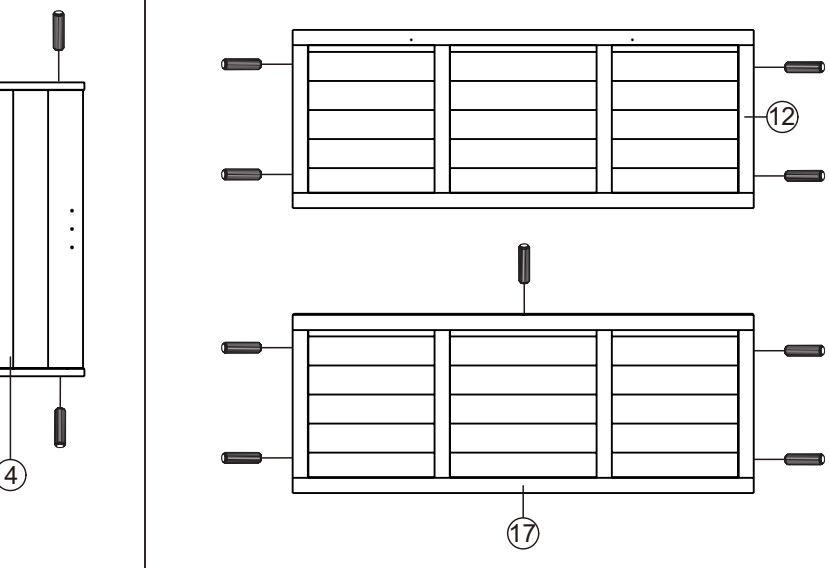

Step 1



H*16

Step 2



H*11

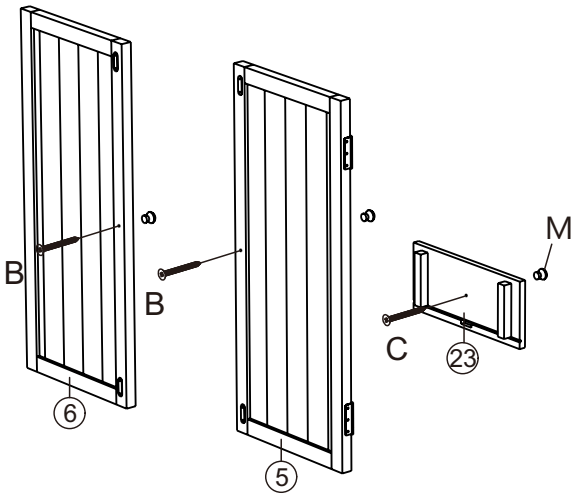

Step 3

B*2	C*1	M*3

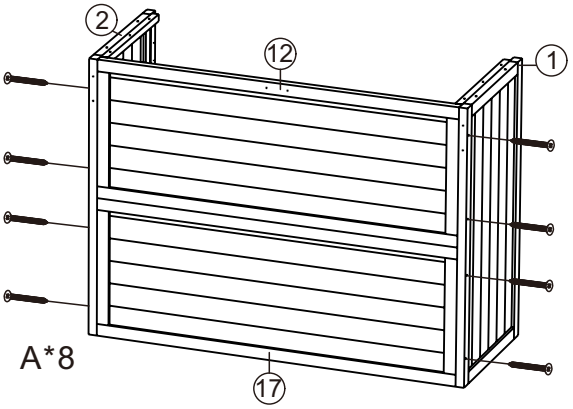

Step 4

A*8

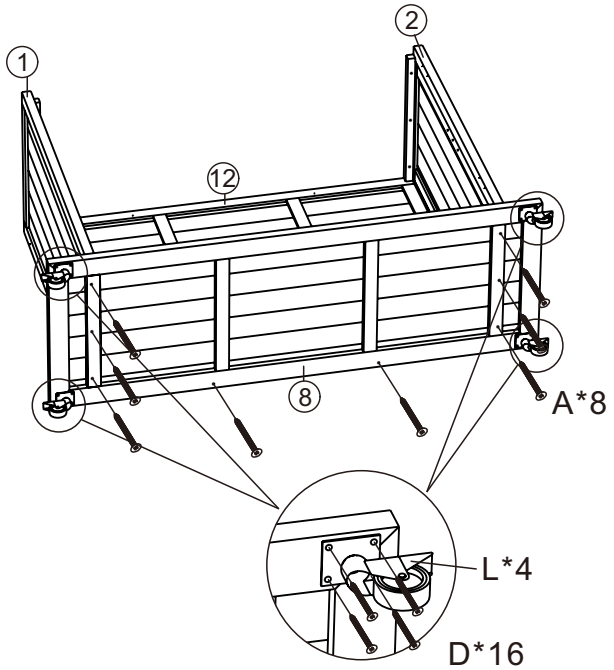

Step 5

A*8	D*16	L*4

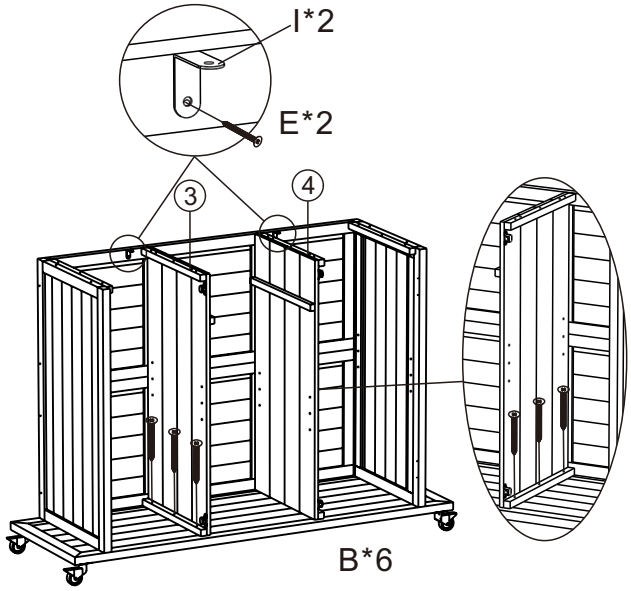

Step 6

B*6	E*2	I*2

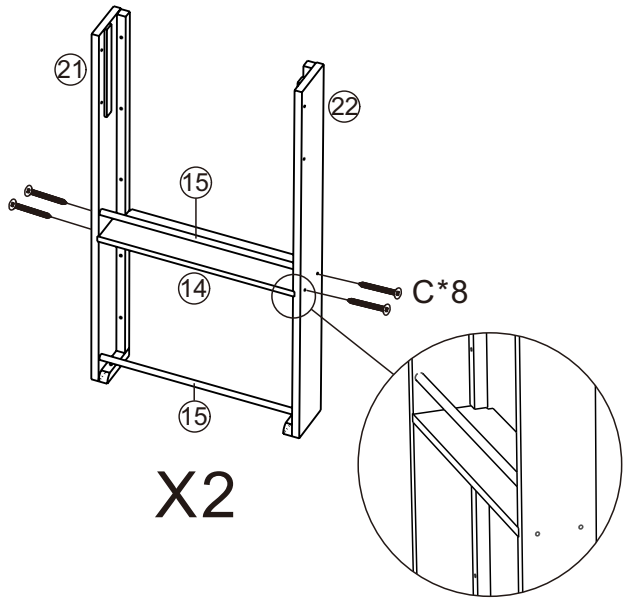

Step 7

	C*8

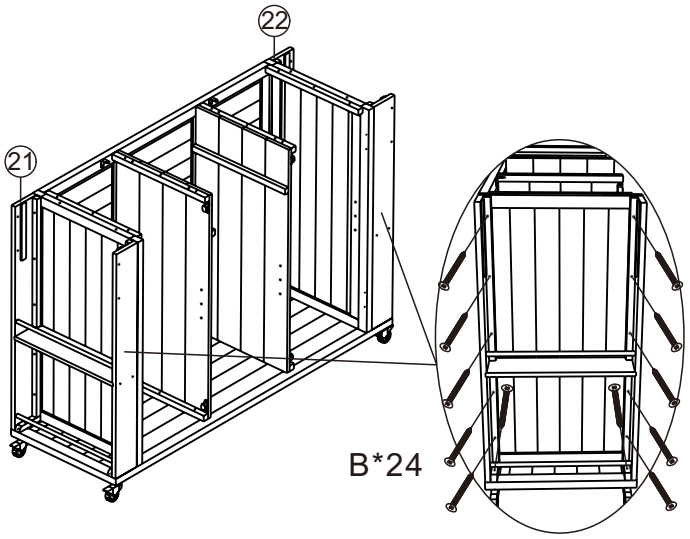

Step 8

	B*24

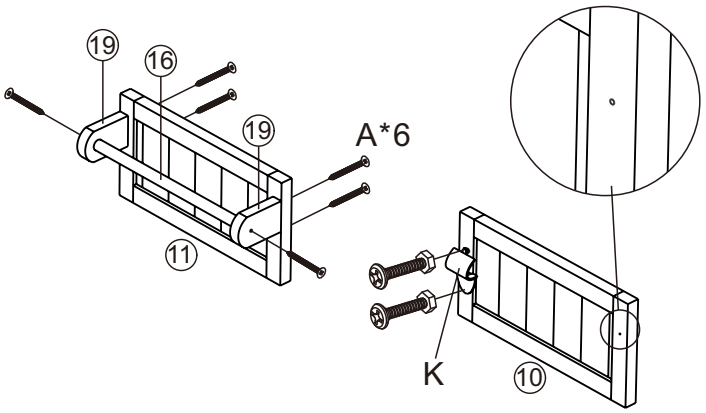

Step 9

A*6	K*1

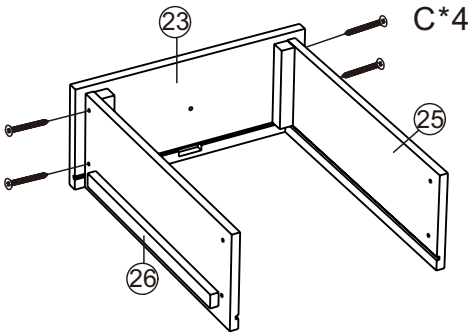

Step 10

C*4

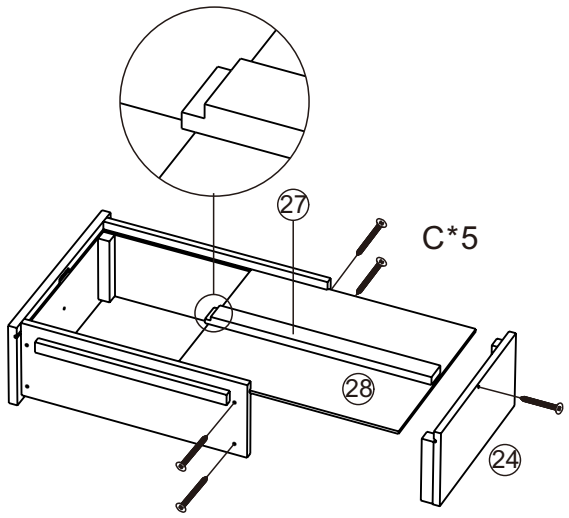

Step 11

	C*5

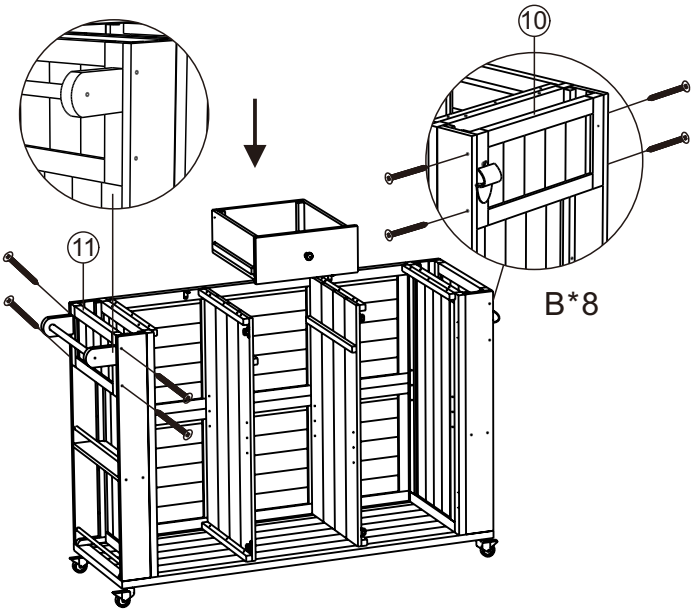

Step 12

	B*8

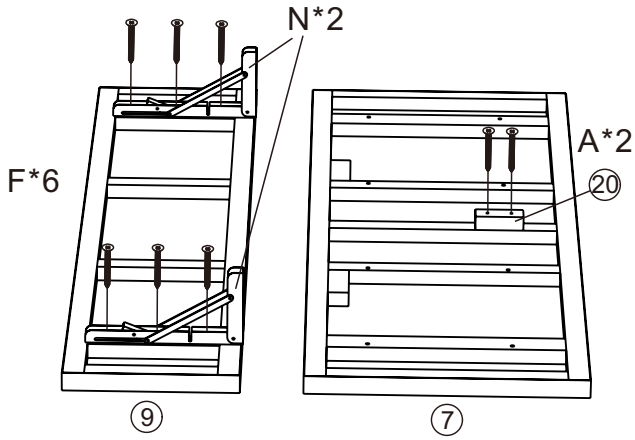

Step 13

A*2	F*6	N*2

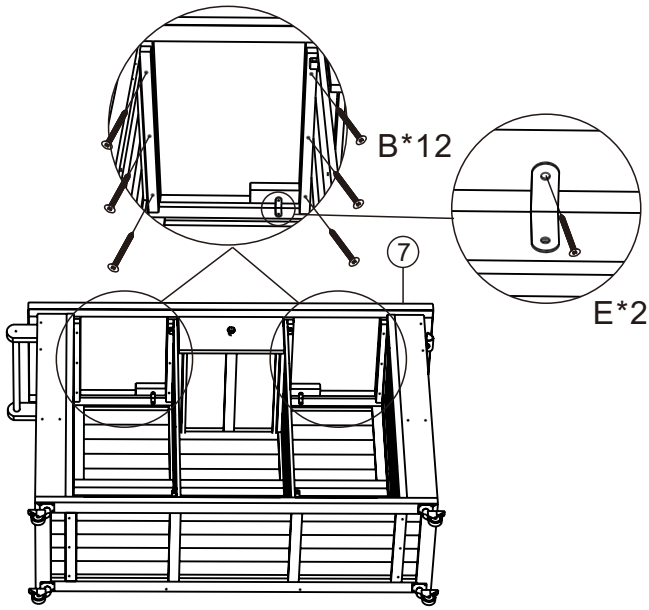

Step 14

B*12	E*2

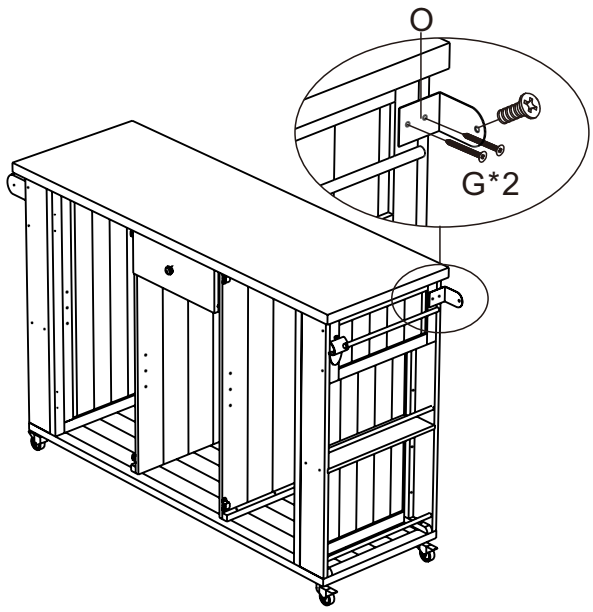

G*2	O*1

Step 15

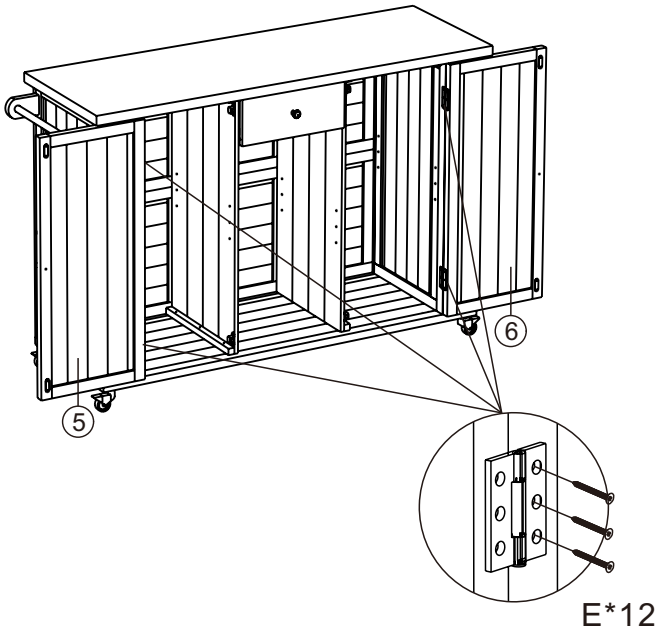

E*12

Step 16

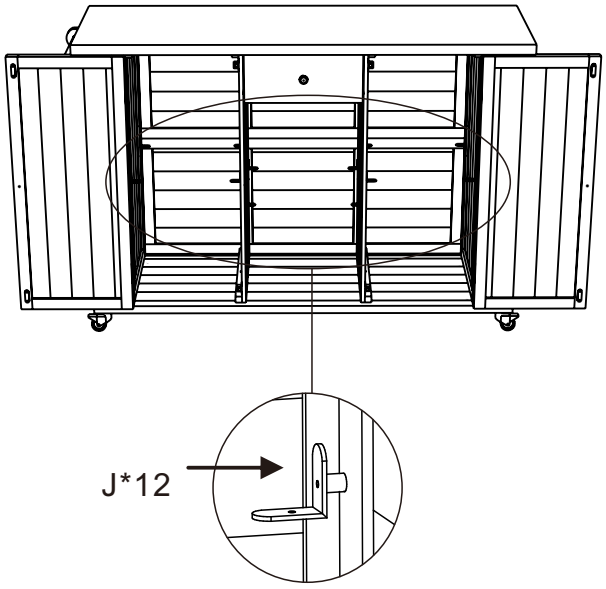

J*12

Step 17

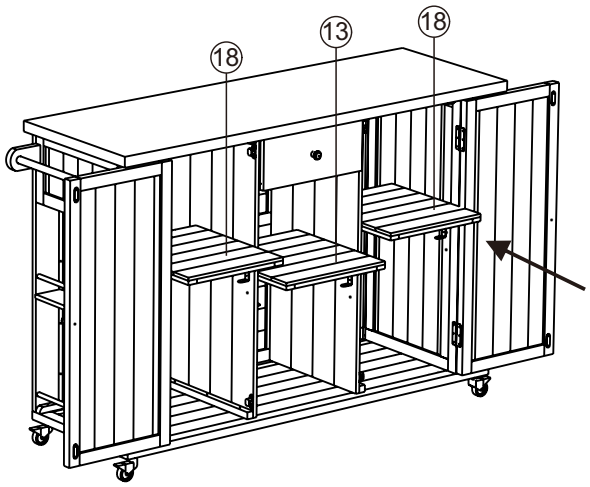

Step 18

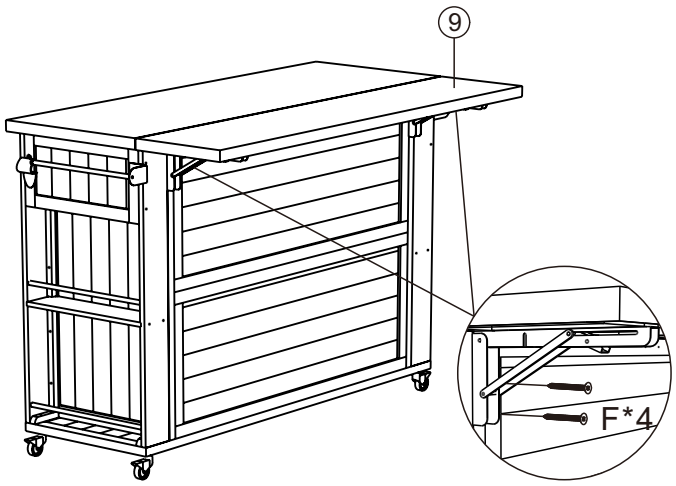

Step 19

F*4

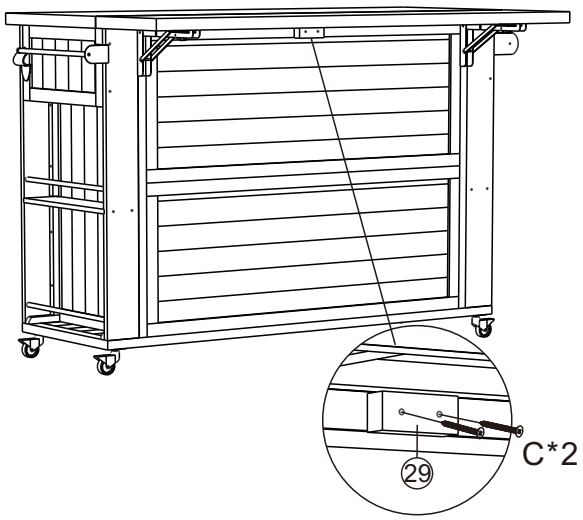

Step 20

C*2