Assembly Instructions

IMPORTANT NOTICE

INSTALLATION GUIDE

tools required: allen wrenches (provided)

ASSEMBLY REQUIREMENT

1.Remove all packaging materials,staples and packing straps from the carton.

2.Refer to Parts Checklist and ensure they are complete before you start assembling.

TIPS FORASSEMBLY

1.Allow ample room for assembly and in close proximity to where product will be placed.

2.Assemble the product on a surface that does not scratch or damage the exterior and finish of the furniture.

3.During assembly,do not over-tighten any fittings as this may cause damage.

4.Do not use power tools to assemble this product.

5.Do not sit or stand on the partially assembled product,use only installed products.

CAREAND USE

·Recommended for indoor and residential use only.

·Wipe with a soft,dry cloth.Do not use harsh abrasives or household cleaners as they may damage the finish.

·Check all the fittings periodically and re-tighten as necessary.Do not use the product if any of the parts is damaged or broken.

PARTS LIST

NO.	Description	QTY	NO.	Description	QTY
A		1	E		1
B		1	F		5
C		1			
D		2			

HARDWARE LIST

NO.	Description	QTY	NO.	Description	QTY
G		1	H	M8*40	5

Caution:Please confirm the parts list before installation

1

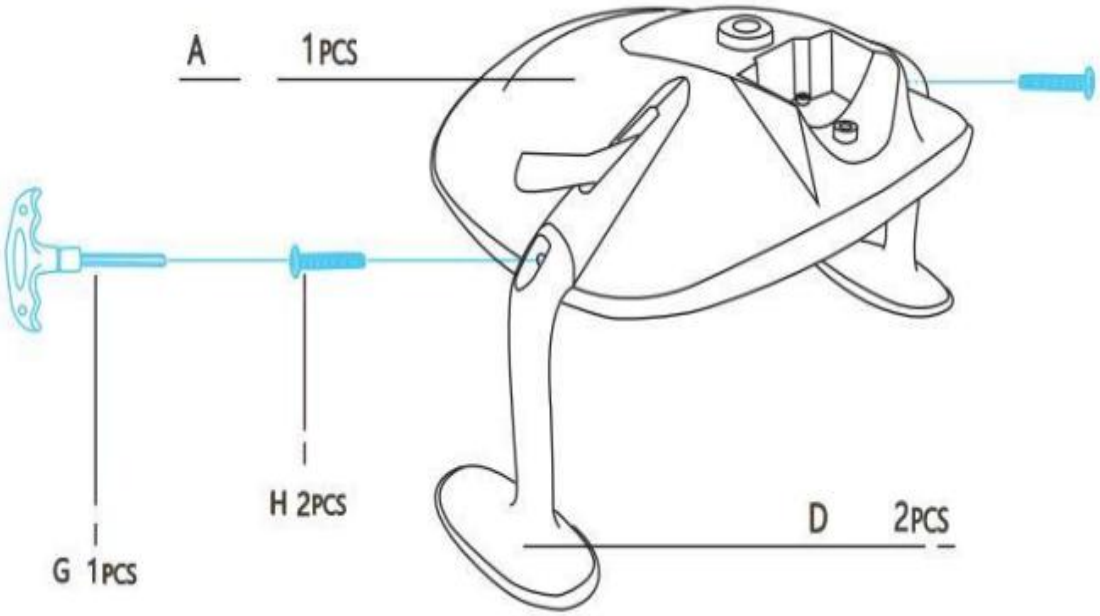

Step 1 Attach the Armrests **D** to the Seat **A** with Screw **H**x2 as the picture.Please note the orientation of the front of the seat.

2

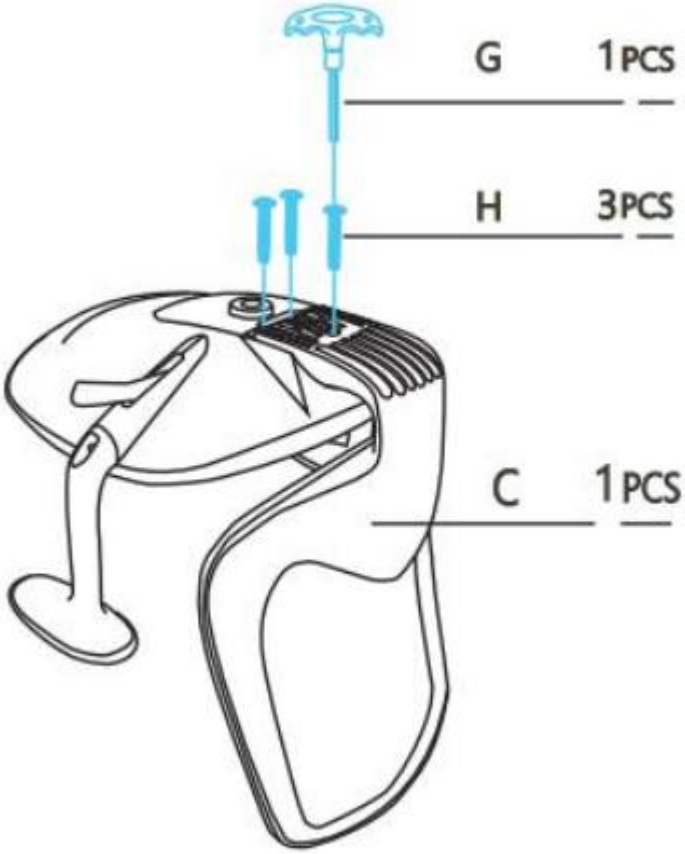

Step 2 Attach the back frame **C** to the Seat **A** with Screws **H**x3,as the picture.Please note the orientation of the front of the seat and the mechanism.

❸

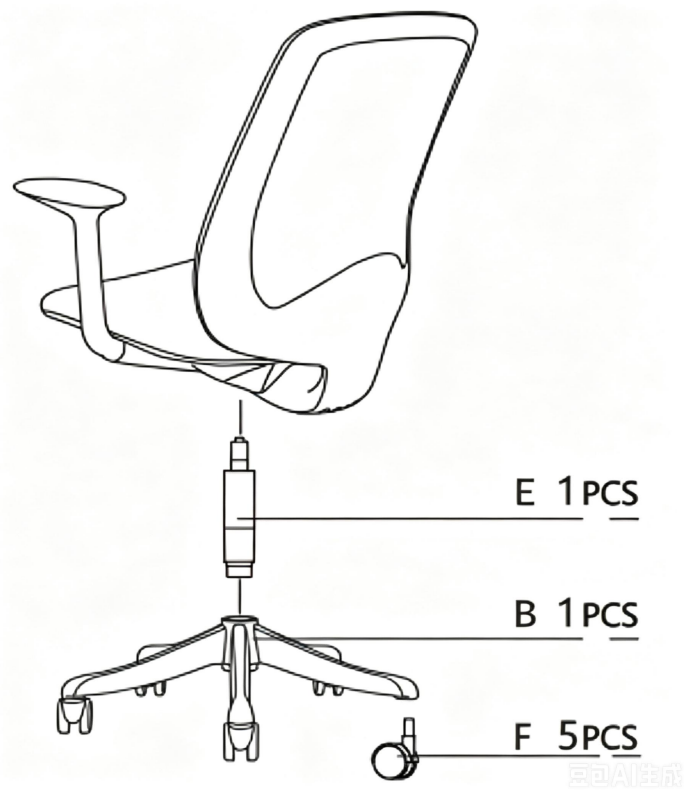

Step 3:Forcefully insert Casters Fx5 into Base B. Simultaneously, insert Gas Lift E into the central position of Base B. By aligning the holes, connect the assembled seat with the assembled base. The tilt mechanism can be adjusted to the top position of the gas lift. Press down firmly to secure.

Feature Instructions

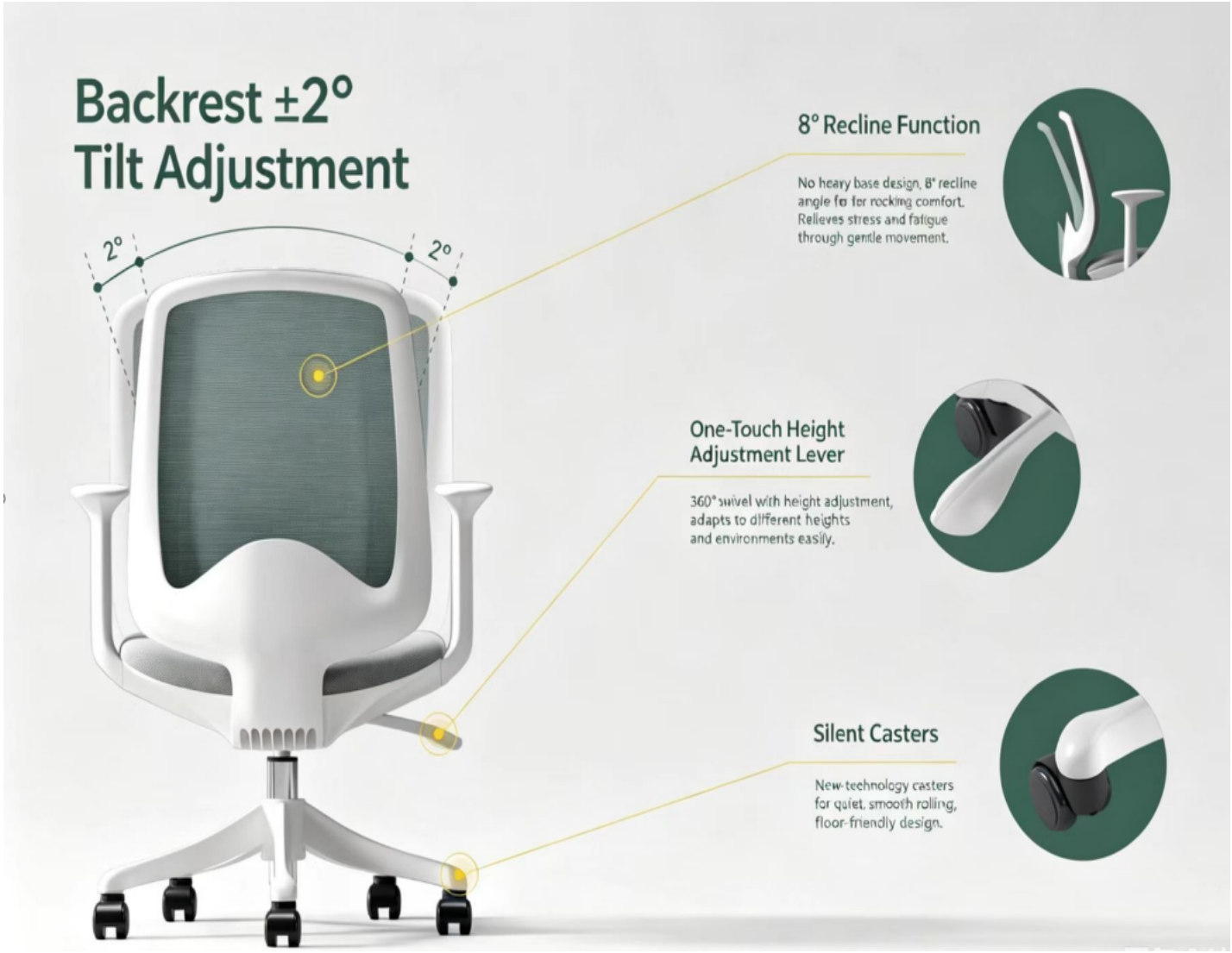

THANK YOU

Thank you very much for purchasing from us.
We have always been trying to provide the best service and reliable products for every customer.
However,accident may happen sometimes,please contact us to resolve any issue before leaving a negative feedback.
Many thanks and welcome to our shop again!