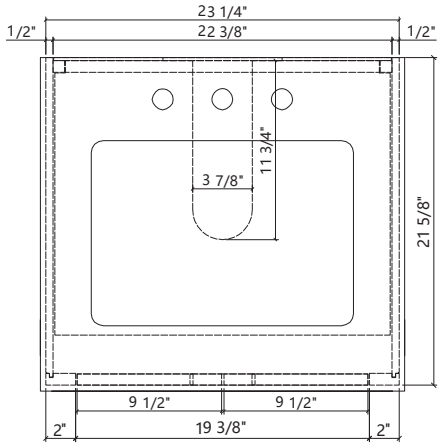
23 1/4"
22 3/8"
1/2"
1/2"
11 3/4"
3 7/8"
21 5/8"
9 1/2"
9 1/2"
2"
19 3/8"
2"

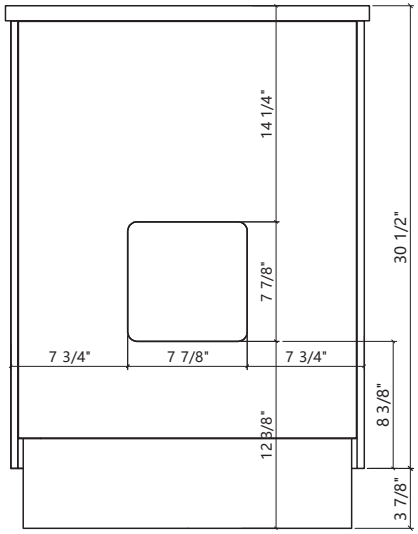
14 1/4"
30 1/2"
7 7/8"
7 3/4"
7 7/8"
7 3/4"
8 3/8"
12 3/8"
3 7/8"

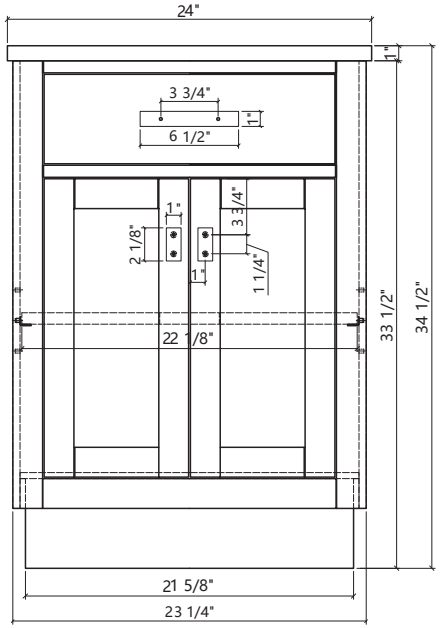
24"
1"
3 3/4"
1"
6 1/2"
1"
3 3/4"
2 1/8"
1"
1 1/4"
22 1/8"
33 1/2"
34 1/2"
21 5/8"
23 1/4"

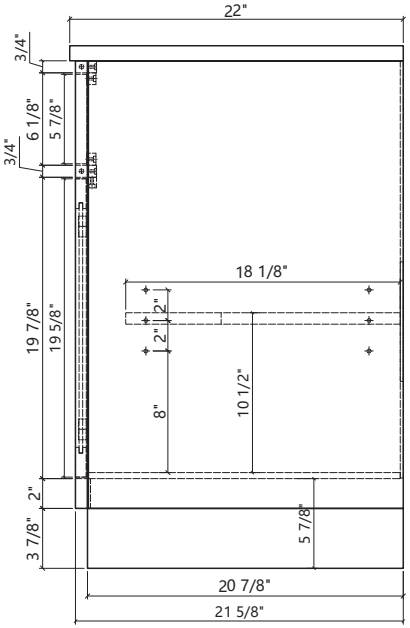
22"
3/4"
6 1/8"
5 7/8"
3/4"
18 1/8"
2"
2"
19 7/8"
19 5/8"
8"
10 1/2"
2"
3 7/8"
5 7/8"
20 7/8"
21 5/8"

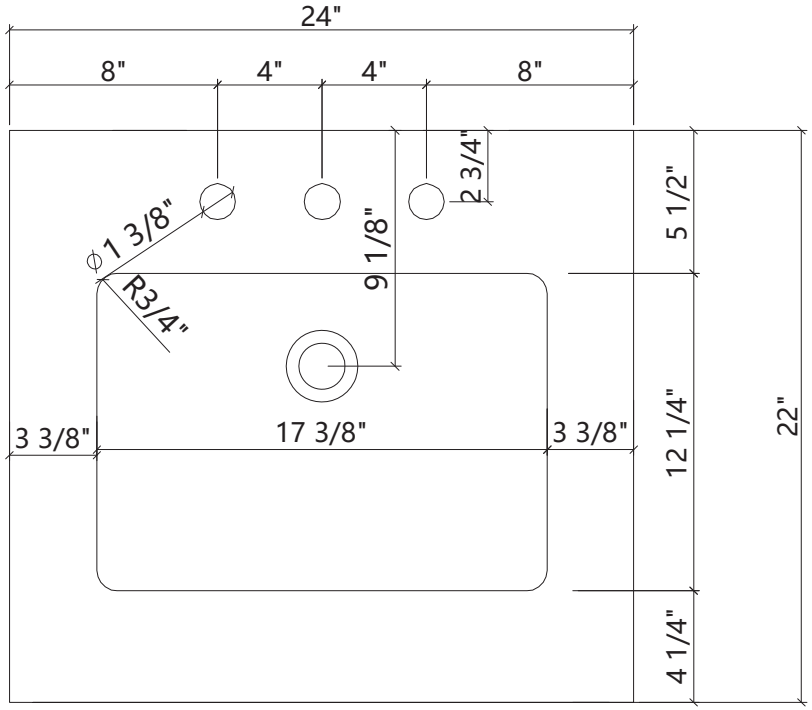
24"
8"
4"
4"
8"
2 3/4"
5 1/2"
⌀1 3/8"
R3/4"
9 1/8"
12 1/4"
22"
3 3/8"
17 3/8"
3 3/8"
4 1/4"

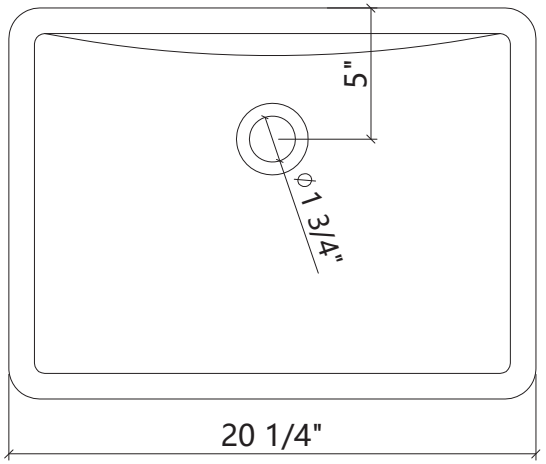
5"
ϕ 1 3/4"
20 1/4"

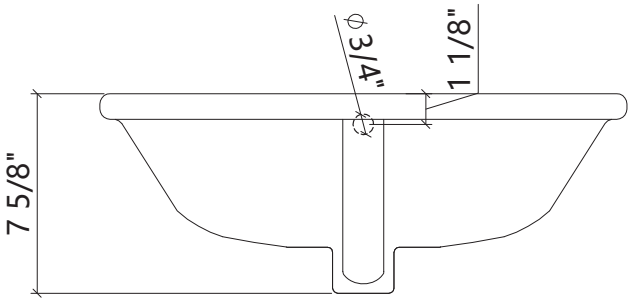
ϕ 3/4"
1 1/8"
7 5/8"

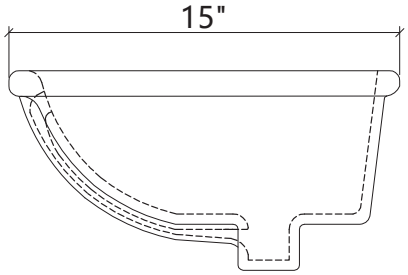
15"

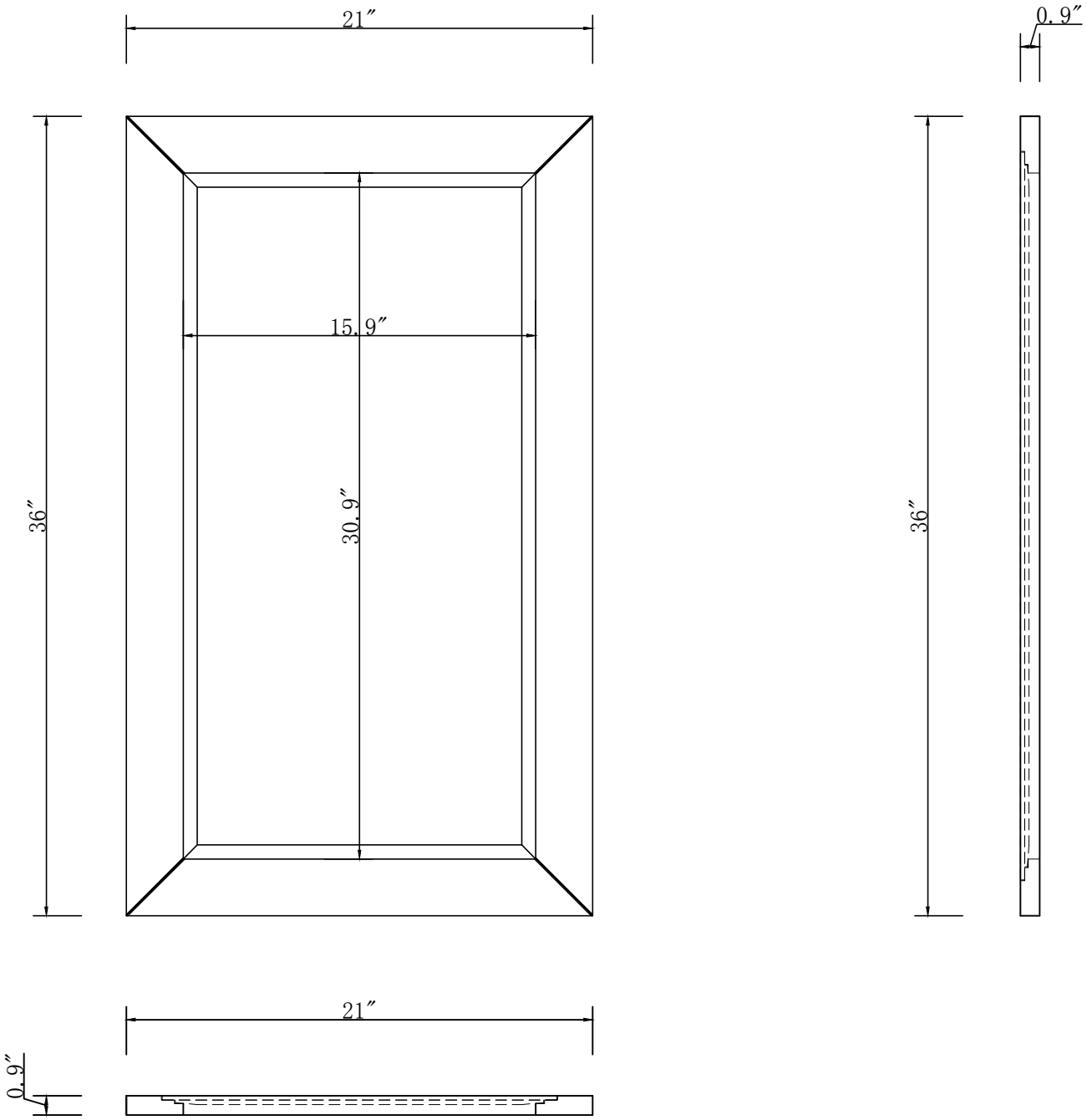
21″
15.9″
36″
30.9″
21″
0.9″
0.9″
36″