ASSEMBLY INSTRUCTION
INSTRUTIONS D'ASSEMBLAGE

SKU:N709P479959

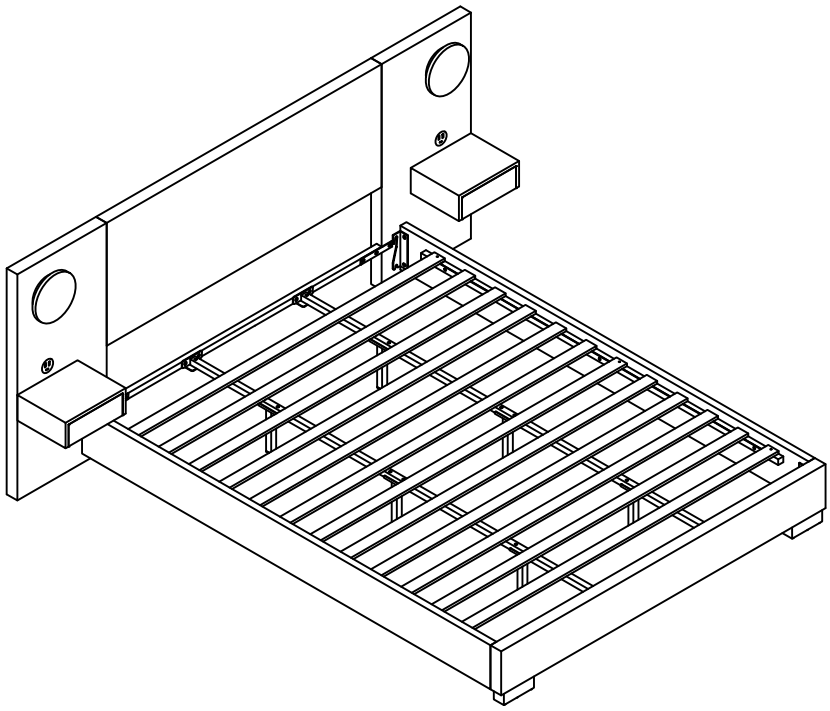

Detail View
vue Détaillée

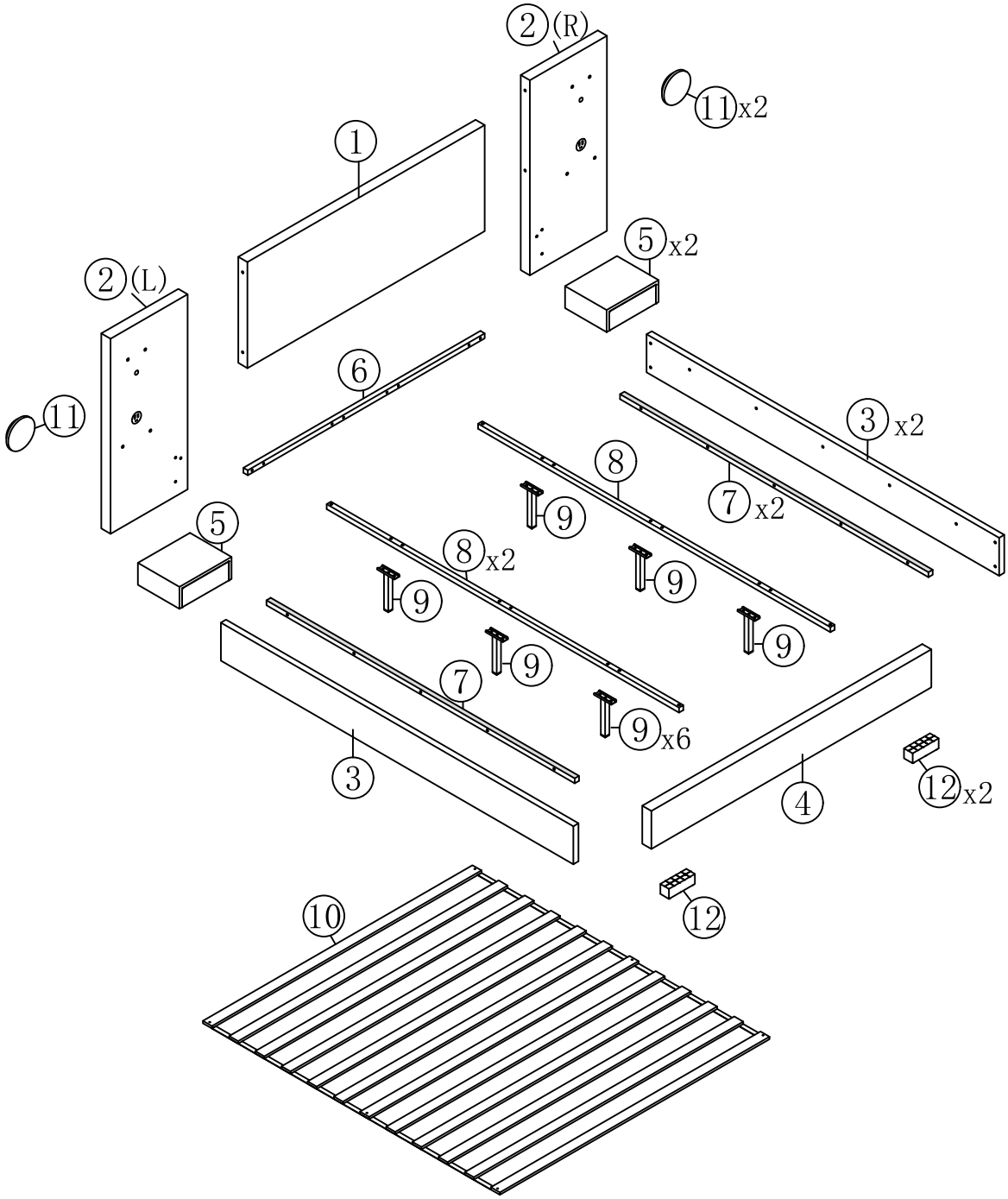

Part List
(Liste des pièces)

N709P479959

1 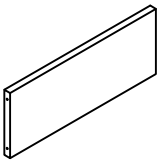 Headboard-1pc (Tête de lit)	**2L** 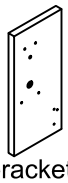 Headboard side bracket-1pc (Support latéral de tête de lit)	**2R** 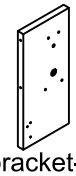 Headboard side bracket-1pc (Support latéral de tête de lit)
3 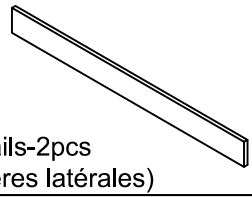 Siderails-2pcs (Barrières latérales)	**4** 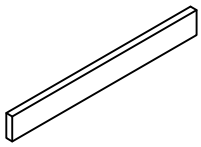 Foot board-1pc (Pied de lit)	**5** 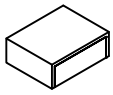 Bedside table-2pcs (Table de chevet)
6 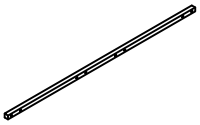 Cross bar-1pc (Barre transversale)	**7** 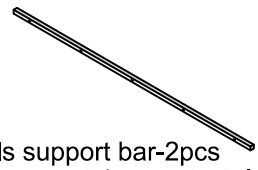 Side rails support bar-2pcs (Barre de support des montants latéraux)	**8**  Center support bar-2pcs (Barre de support centrale)
9  Support leg-6pcs (Pied de support)	**10** 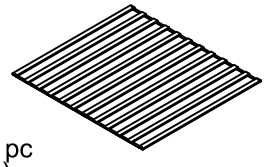 Slats-1pc (Lattes)	**11**  Headboard side panel-2pcs (Panneau latéral de tête de lit)
12 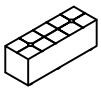 Bed legs-2pcs (Pieds de lit)		

Hardware List
(Liste du matériel)

N709P479959

A 	**B** 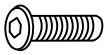 Ø8*18mm	**C**  Ø8*45mm
Allen Key(1pc) (Clé Allen)	Bolts(30pcs) (Boulons)	Bolts(30pcs) (Boulons)
D  Ø8*75mm	**E** 	**F**  Ø3*16mm
Bolts(8pcs) (Boulons)	Washer(12pcs) (Rondelle)	Nails(4pcs) (Clous)
G  Ø6*50mm	**H** 	**I** 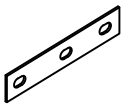
Nails(4pcs) (Clous)	Cable clip(2pcs) (Clip de câble)	Three hole iron(2pcs) (Plaque en fer à trois trous)
J 	**K** 	**L** 
Center support bar fittings(4pcs) (Ferrures de barre de support centrale)	Hinge(4pcs) (Charnière)	LED-0.5(2pcs)
M 	**N** 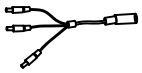	**O** 
Color controller(1pc) (Contrôleur de couleur)	Power line(1pc) (Cordon d'alimentation)	Power adapter(1pc) (Adaptateur d'alimentation)
P  Ø4*25mm		
Nails(6pcs) (Clous)		

Remark: We recommend you assemble your bed in the flat ground.
(Remarque : Nous vous conseillons de monter votre massif sur un sol plat.)

Step 1 x2
(Étape 1 x2)

L

2PCS

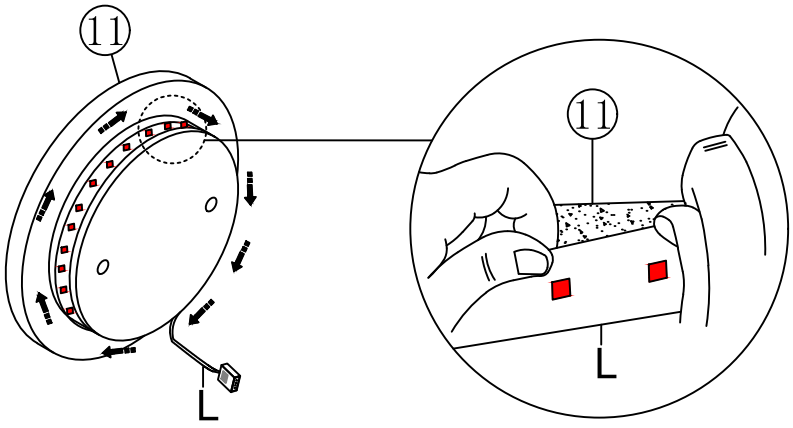

Step 2
(Étape 2)

A	D	E
	 M8X75mm	
	4PCS	4PCS

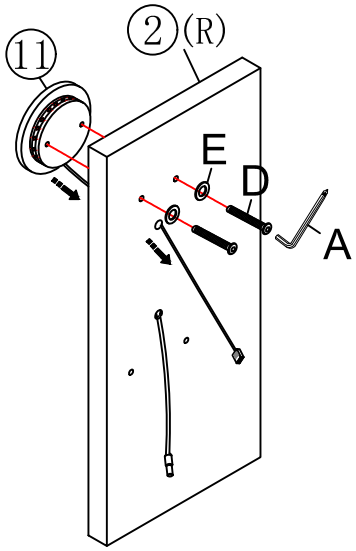

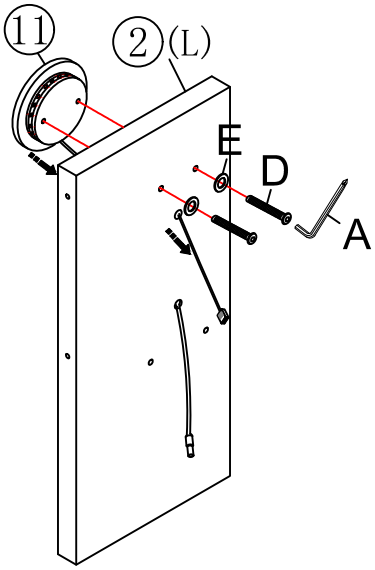

Step 3
(Étape 3)

A	C	E
	 M8X45mm	
	4PCS	4PCS

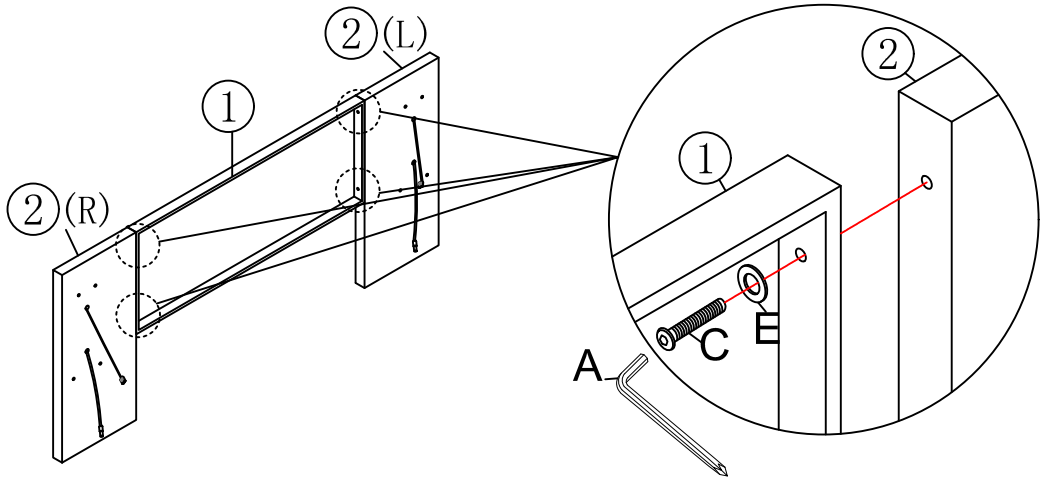

Step 4
(Étape 4)

A	B	K
	 M8X18mm	
	8PCS	2PCS

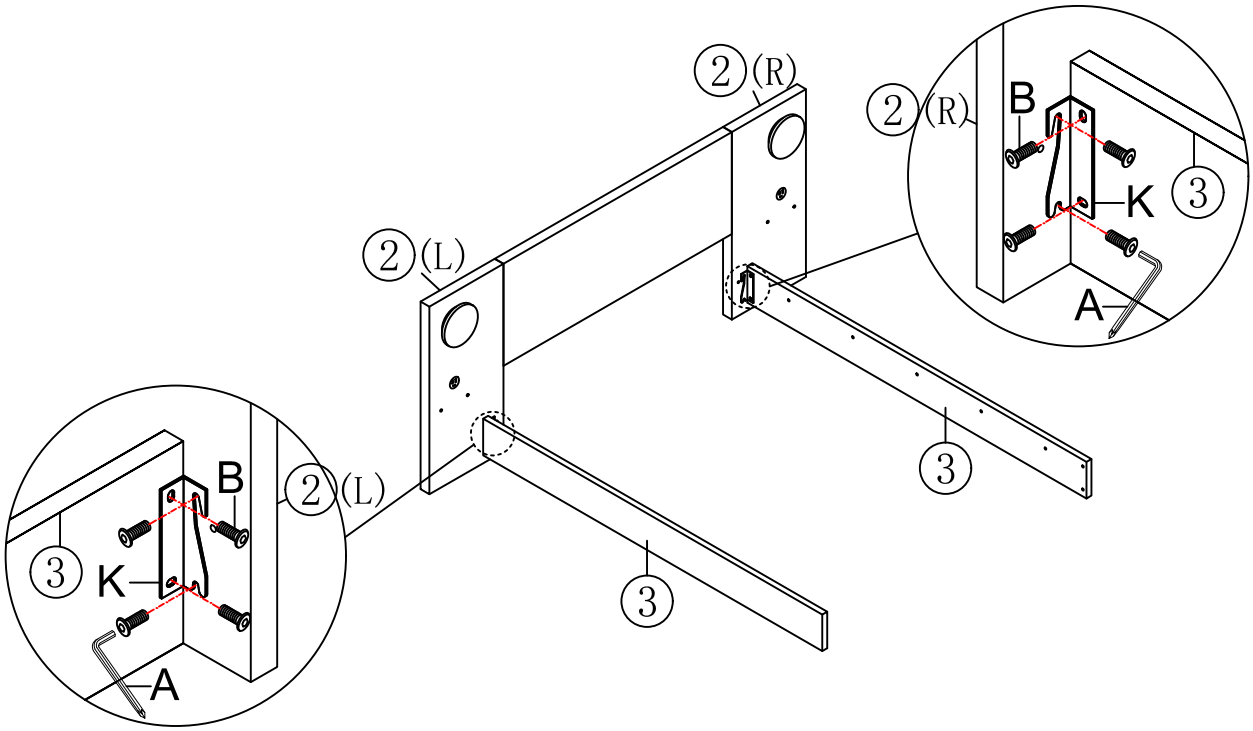

Step 5
(Étape 5)

A	G
	 M6X50mm
	4PCS

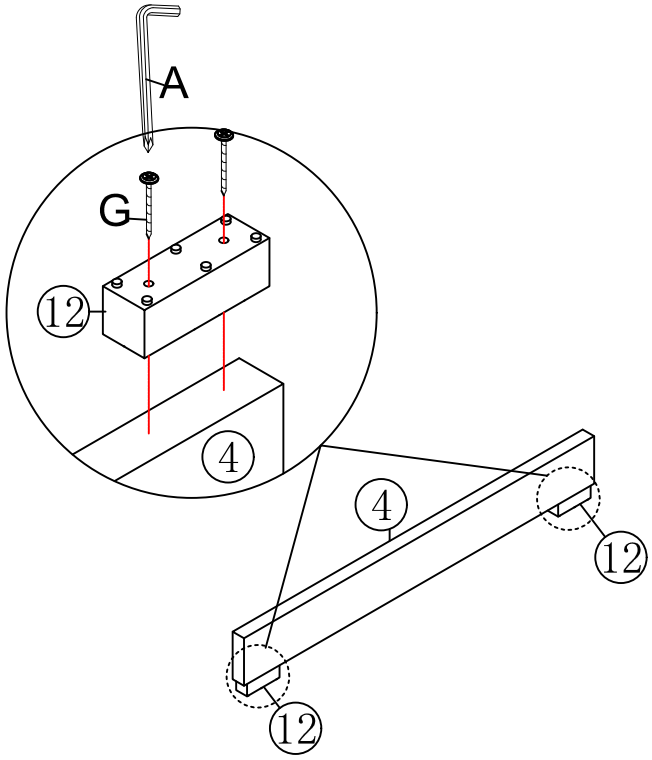

Step 6
(Étape 6)

A	B	K
	 M8X18mm	
	8PCS	2PCS

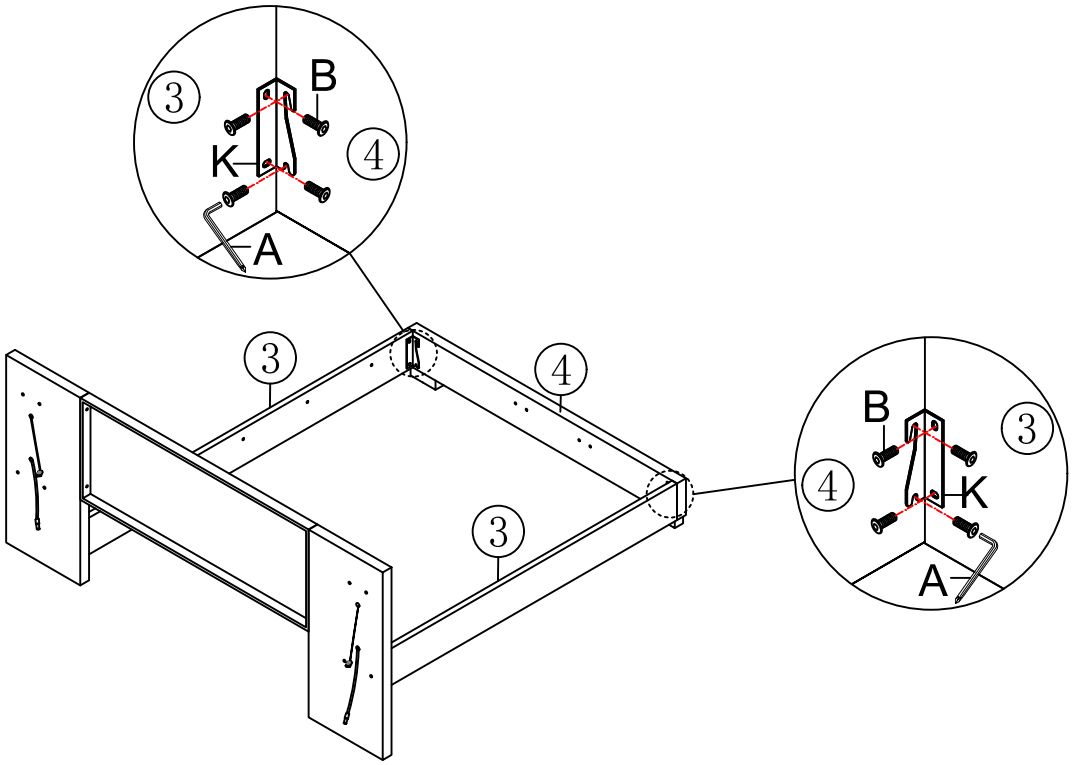

Step 7
(Étape 7)

A	C
	 M8X45mm
	10PCS

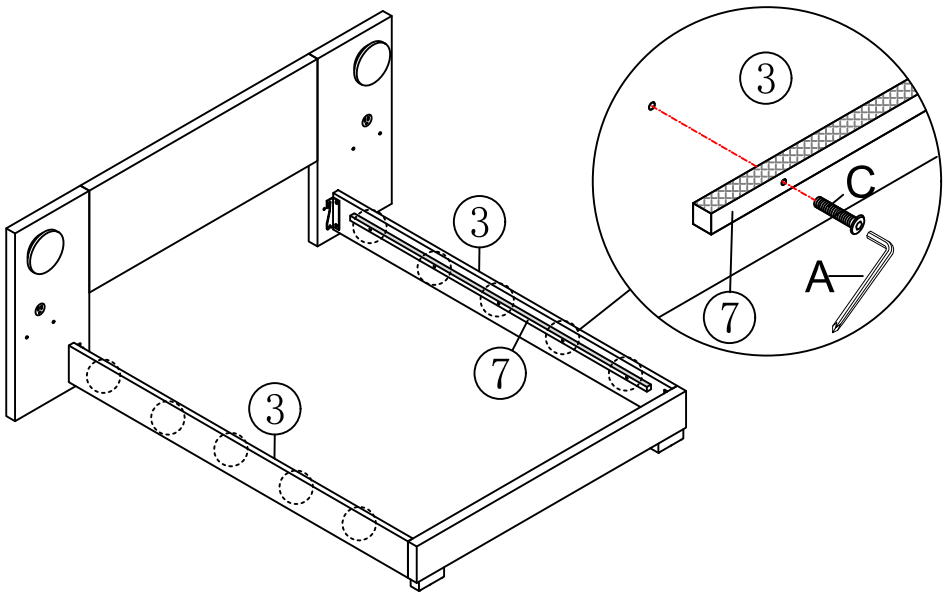

Step 8
(Étape 8)

A	B	I
	 M8X18mm	
	6PCS	2PCS

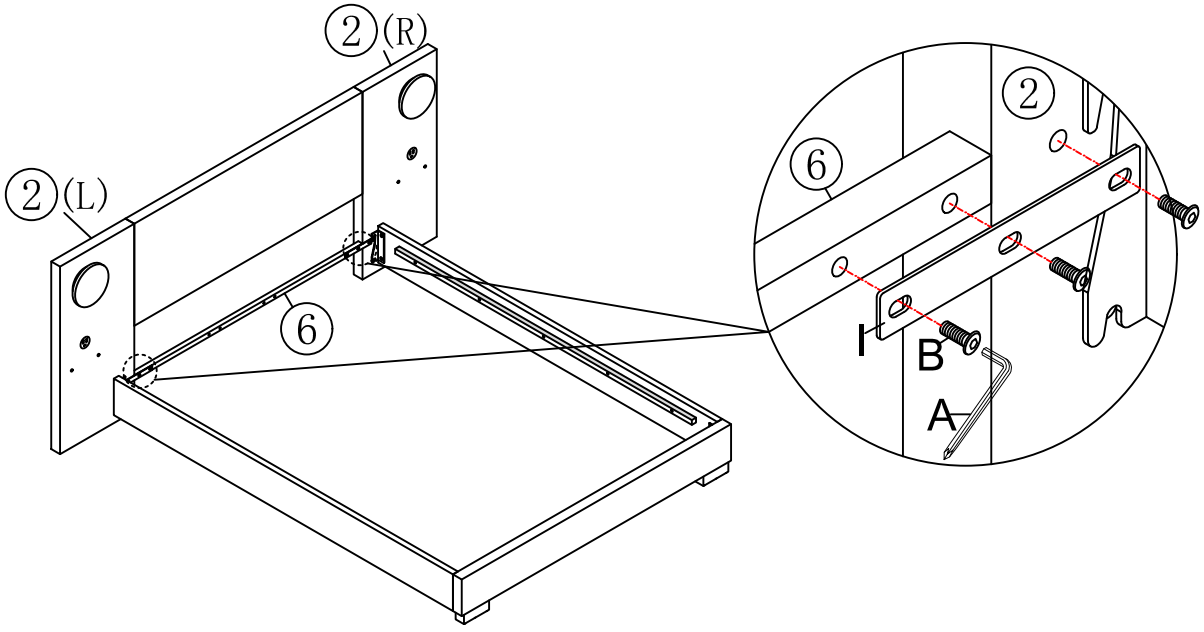

Step 9
(Étape 9)

A	D	E
	 M8X75mm	
	4PCS	4PCS

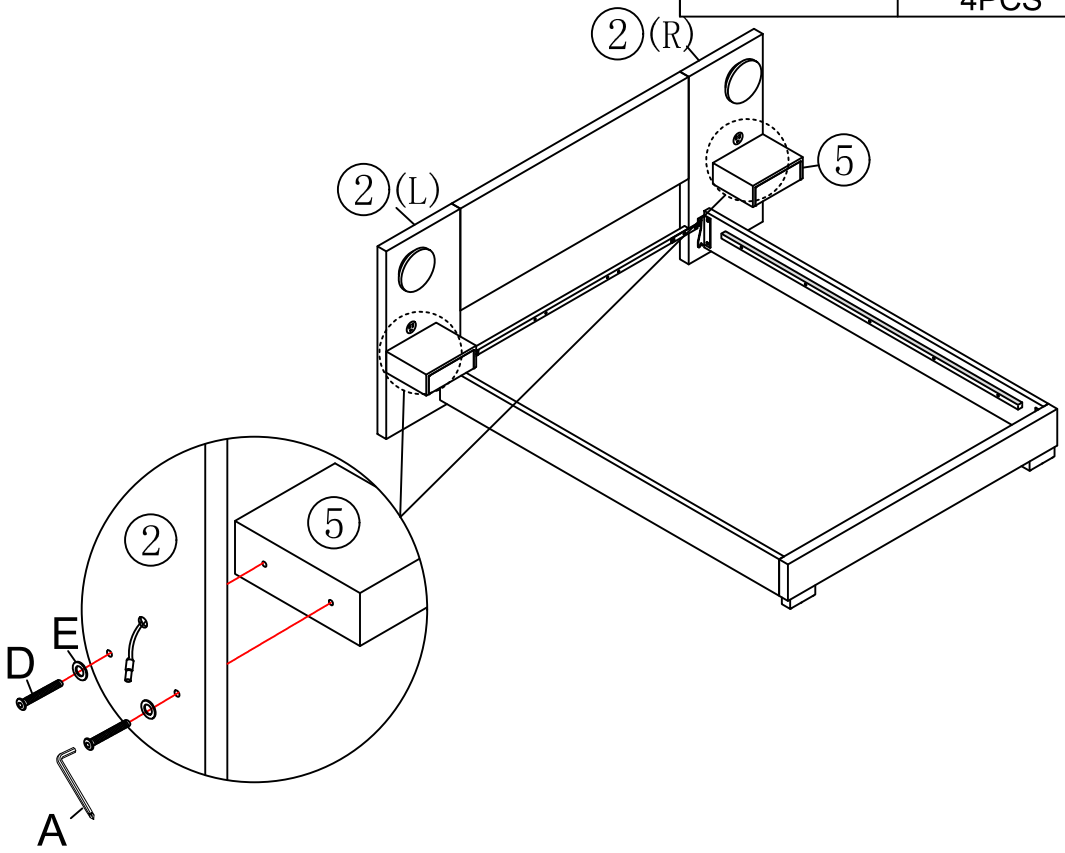

Step 10
(Étape 10)

A	B	J
	 M8X18mm	
	8PCS	4PCS

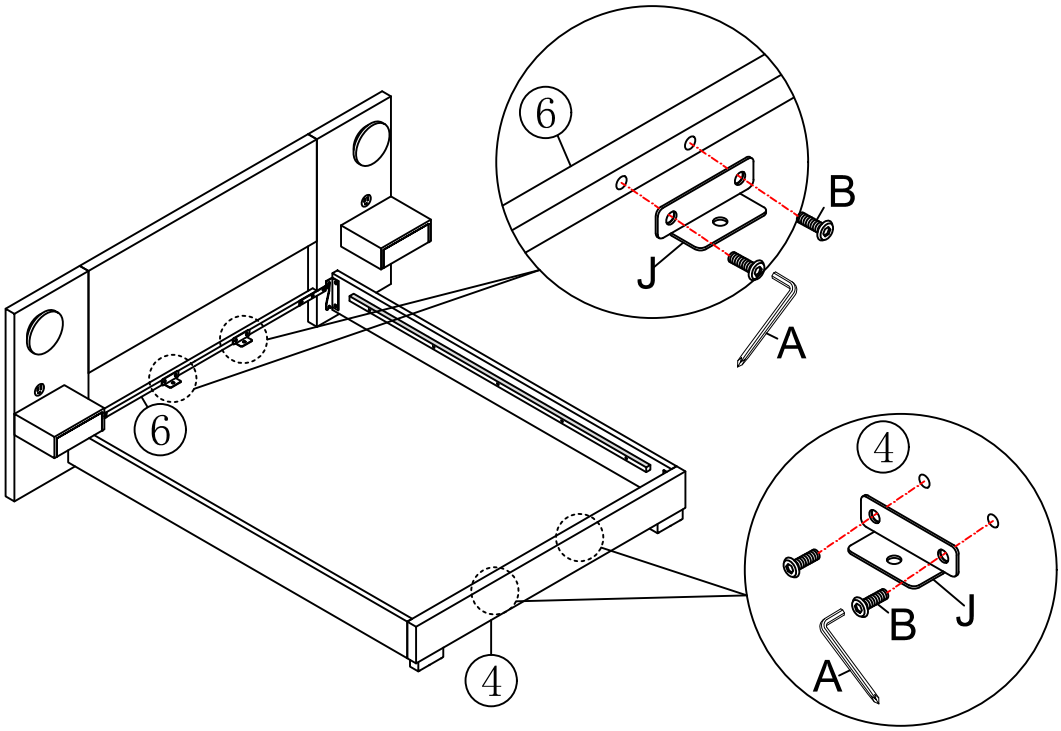

Step 11
(Étape 11)

A	C
	 M8X45mm
	12PCS

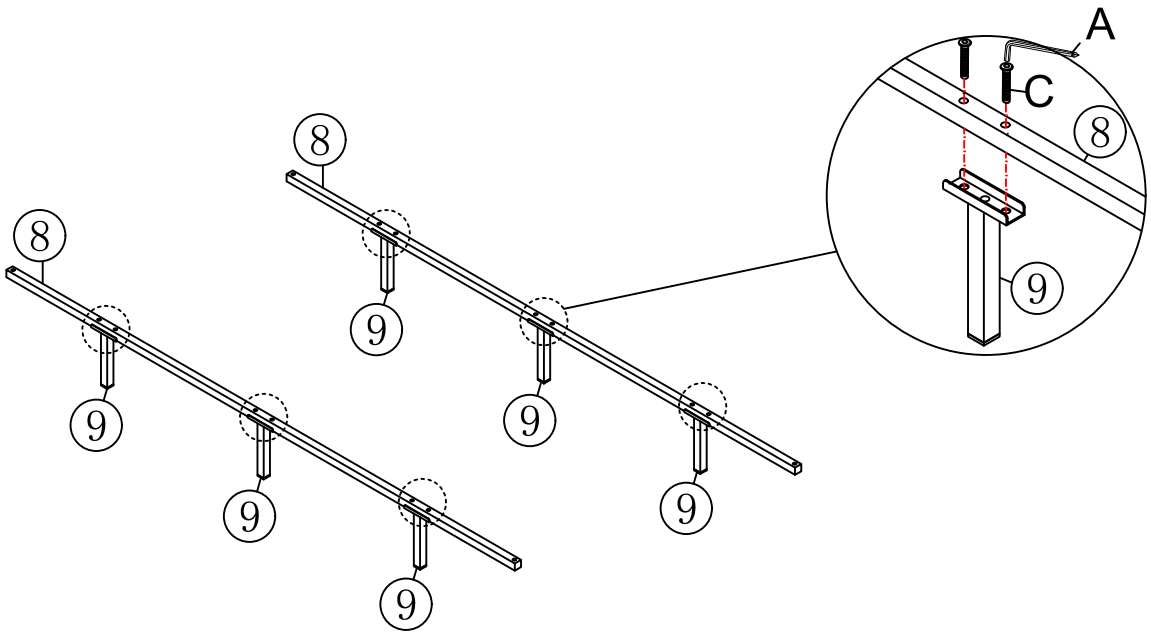

Step 12
(Étape 12)

A	C
	 M8X45mm
	4PCS

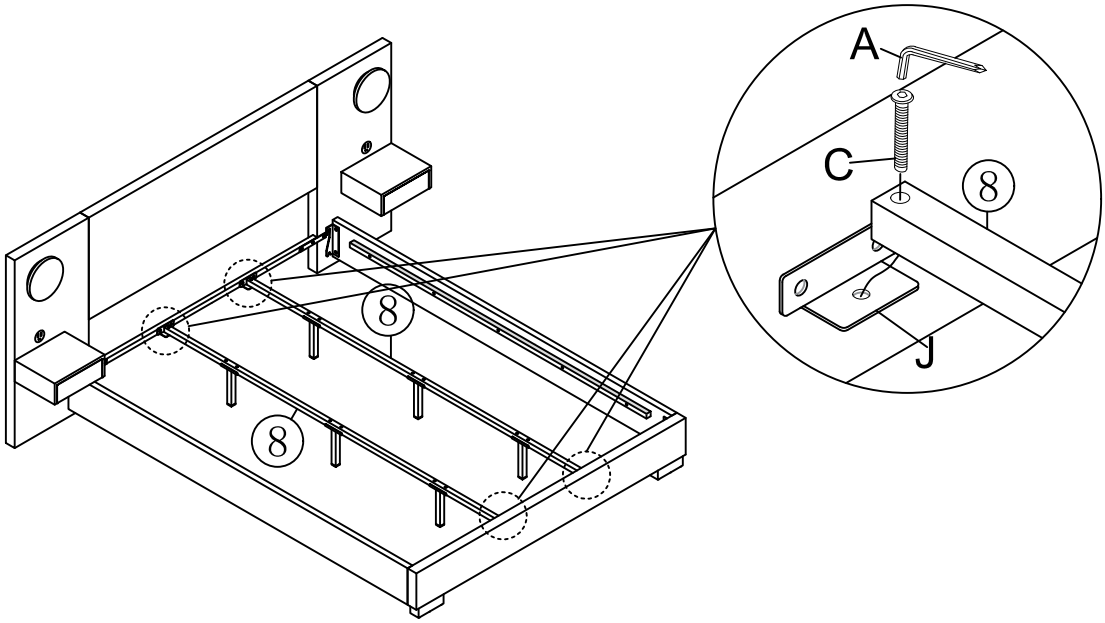

Step 13
(Étape 13)

A	P
	 M4X25mm
	6PCS

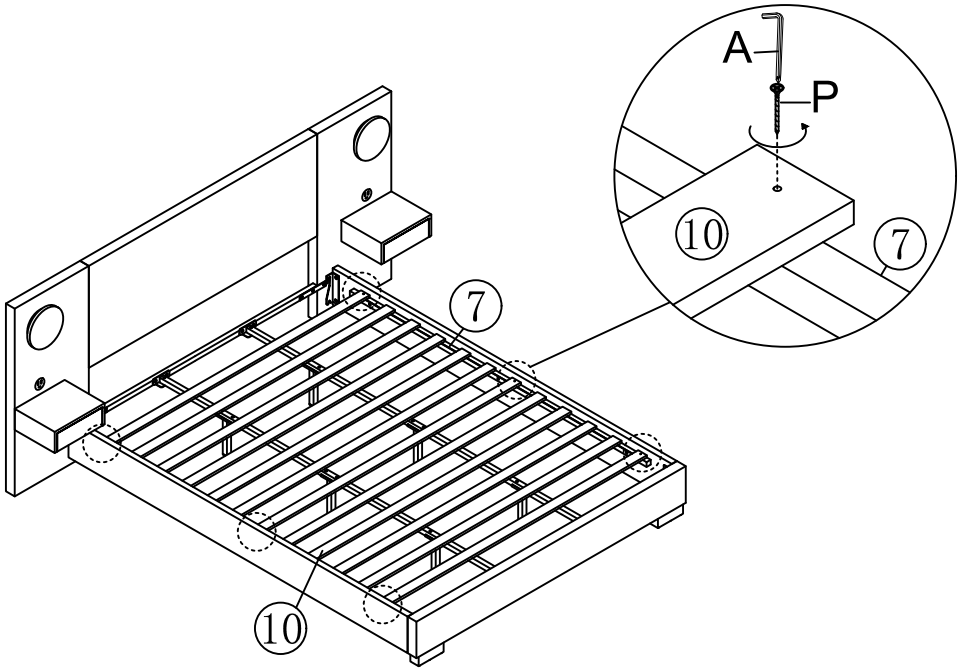

Step 14
(Étape 14)

A	F	H
	 M3X16mm	
	4PCS	2PCS

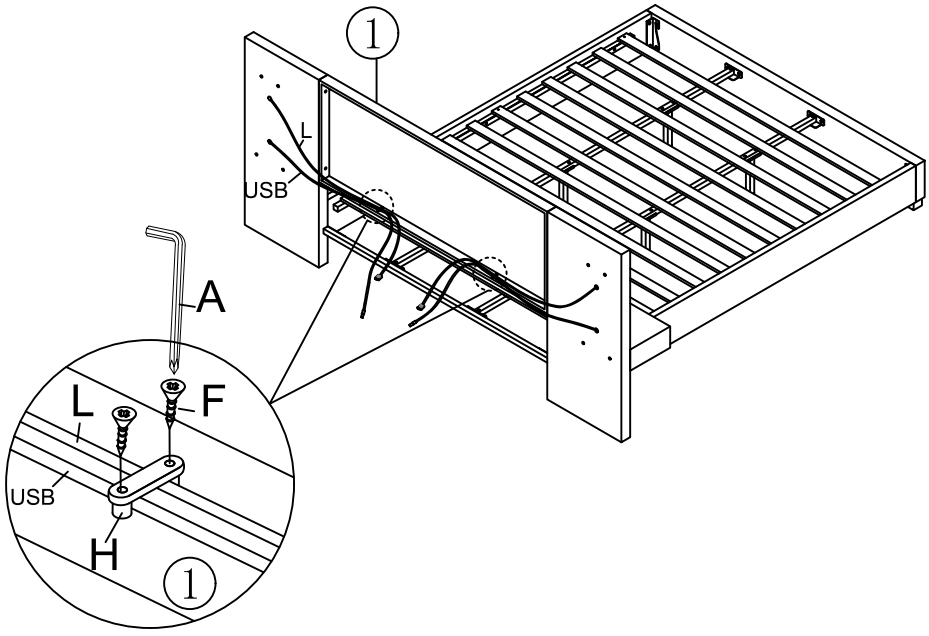

Step 15
(Étape 15)

M	N	O
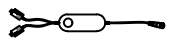		
1PC	1PC	1PC

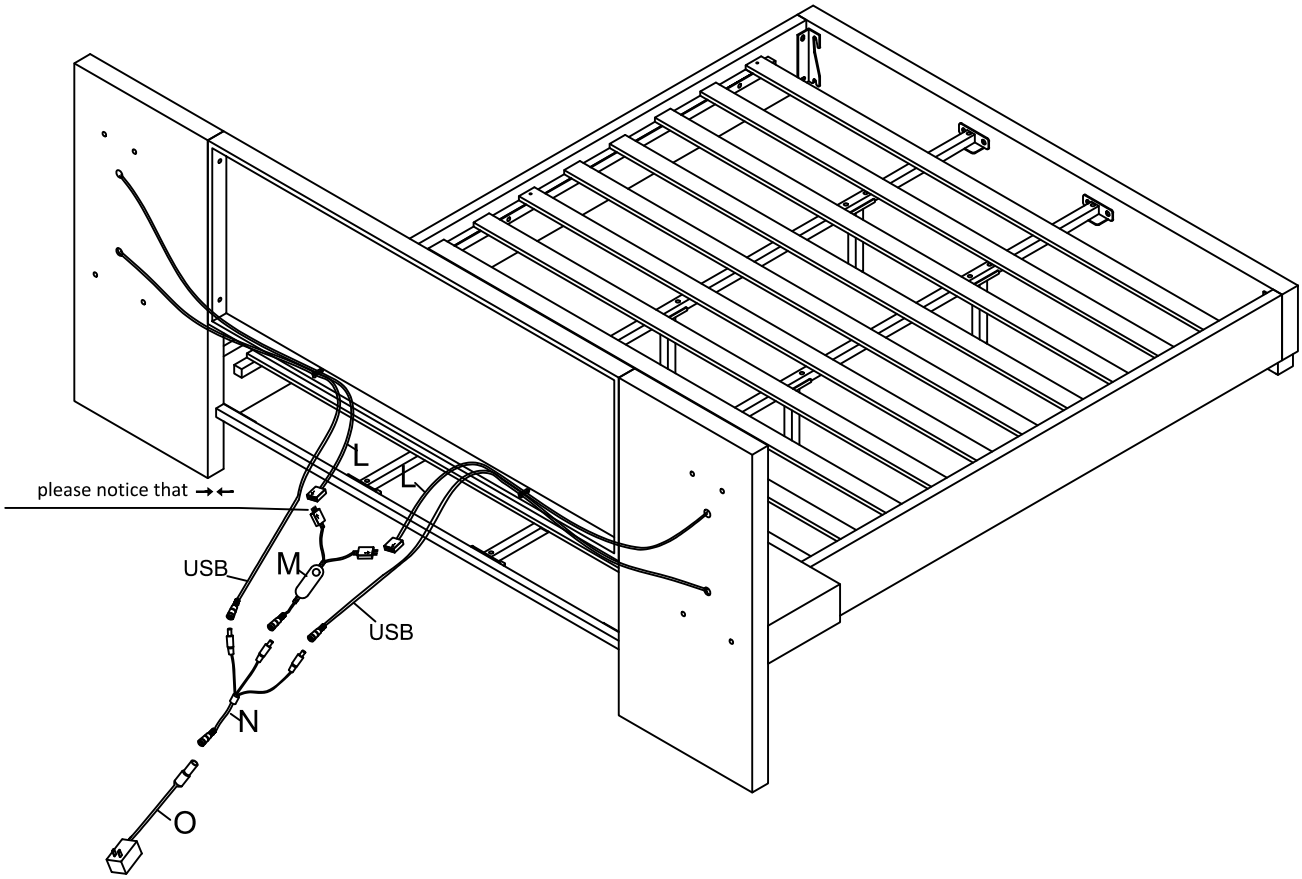

Step 16
(Étape 16)

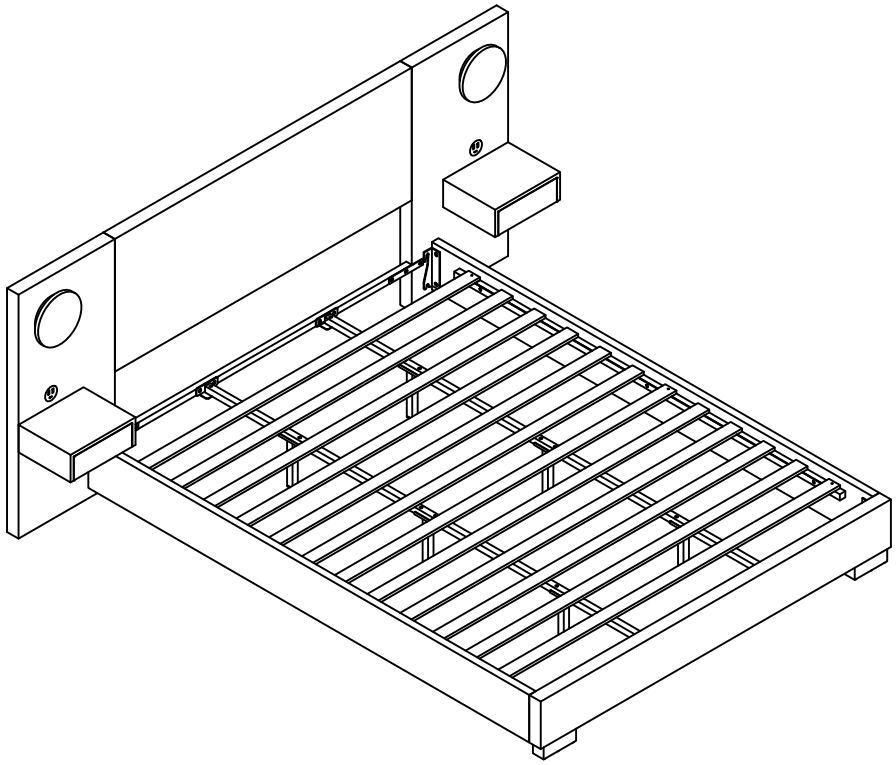

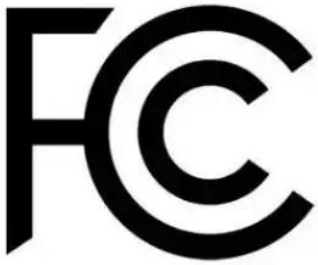

Product Name:LED light strip

Model:HZY-5050RGB-30D-12V

"This device complies with Part 15 of the FCC Rules,

Operation is subject to the following two conditions :

(1) this device may not cause harmful interference,and

(2) this device must accept any interferece

received,including interference that may cause undesired operation."

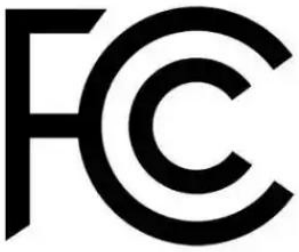

Product Name:Bluetooth controller

Model:2A595YH-6181

"This device complies with Part 15 of the FCC Rules,

Operation is subject to the following two conditions :

(1) this device may not cause harmful interference,and

(2) this device must accept any interferece

received,including interference that may cause undesired operation."

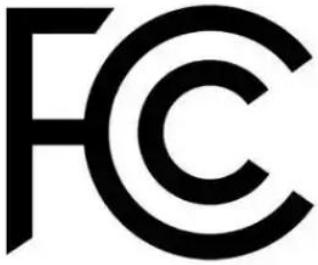

Product Name:Power Adapter

Model:SG-120200024AU

"This device complies with Part 15 of theFCC Rules

Operation is subject to the following two conditions :

(1) this device may not cause harmful interference,and

(2) this device must accept any interferece

received,including interference that may cause undesired operation."

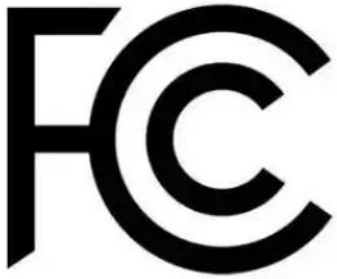

Product Name:Embedded USB port

Model:12V A+C

(1)"This device complies with Part 15 of the FCC Rules,Operation is subject to the following two conditions :

this device may not cause harmful interference,and (2)this device must accept any interference received,including interference that may cause undesired operation."