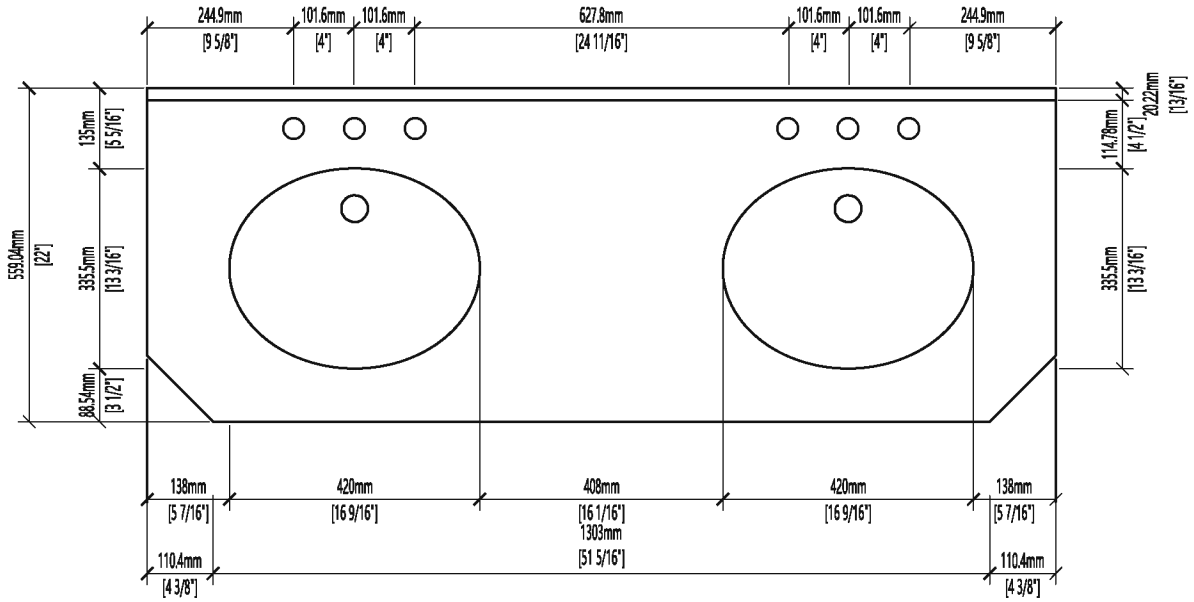
244.9mm
[9 5/8"]
101.6mm
[4"]
101.6mm
[4"]
627.8mm
[24 11/16"]
101.6mm
[4"]
101.6mm
[4"]
244.9mm
[9 5/8"]
20.22mm
[13/16"]
114.78mm
[4 1/2"]
135mm
[5 5/16"]
559.04mm
[22"]
335.5mm
[13 3/16"]
88.54mm
[3 1/2"]
335.5mm
[13 3/16"]
138mm
[5 7/16"]
420mm
[16 9/16"]
408mm
[16 1/16"]
420mm
[16 9/16"]
138mm
[5 7/16"]
1303mm
[51 5/16"]
110.4mm
[4 3/8"]
110.4mm
[4 3/8"]

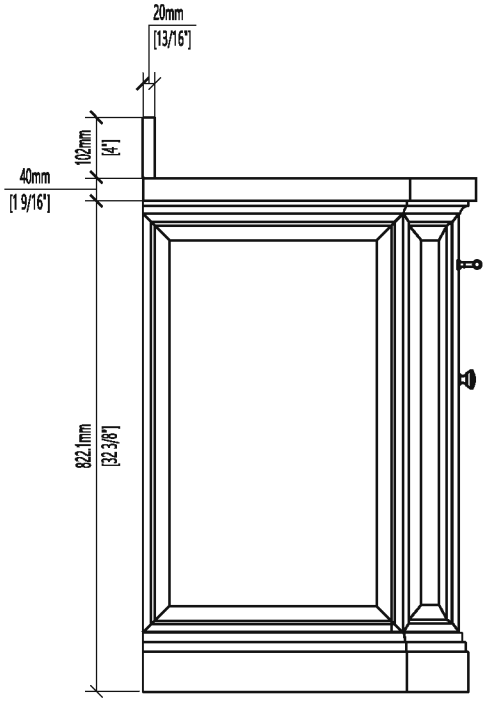
20mm
[13/16"]
102mm
[4"]
40mm
[1 9/16"]
822.1mm
[32 3/8"]

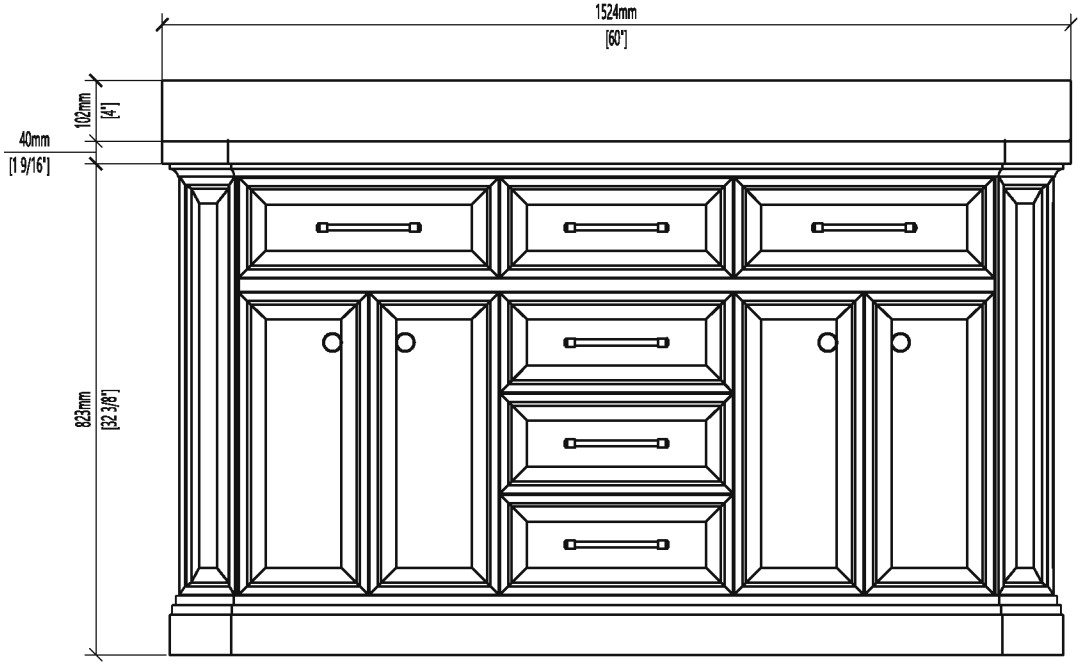
1524mm
[60"]
102mm
[4"]
40mm
[1 9/16"]
823mm
[32 3/8"]

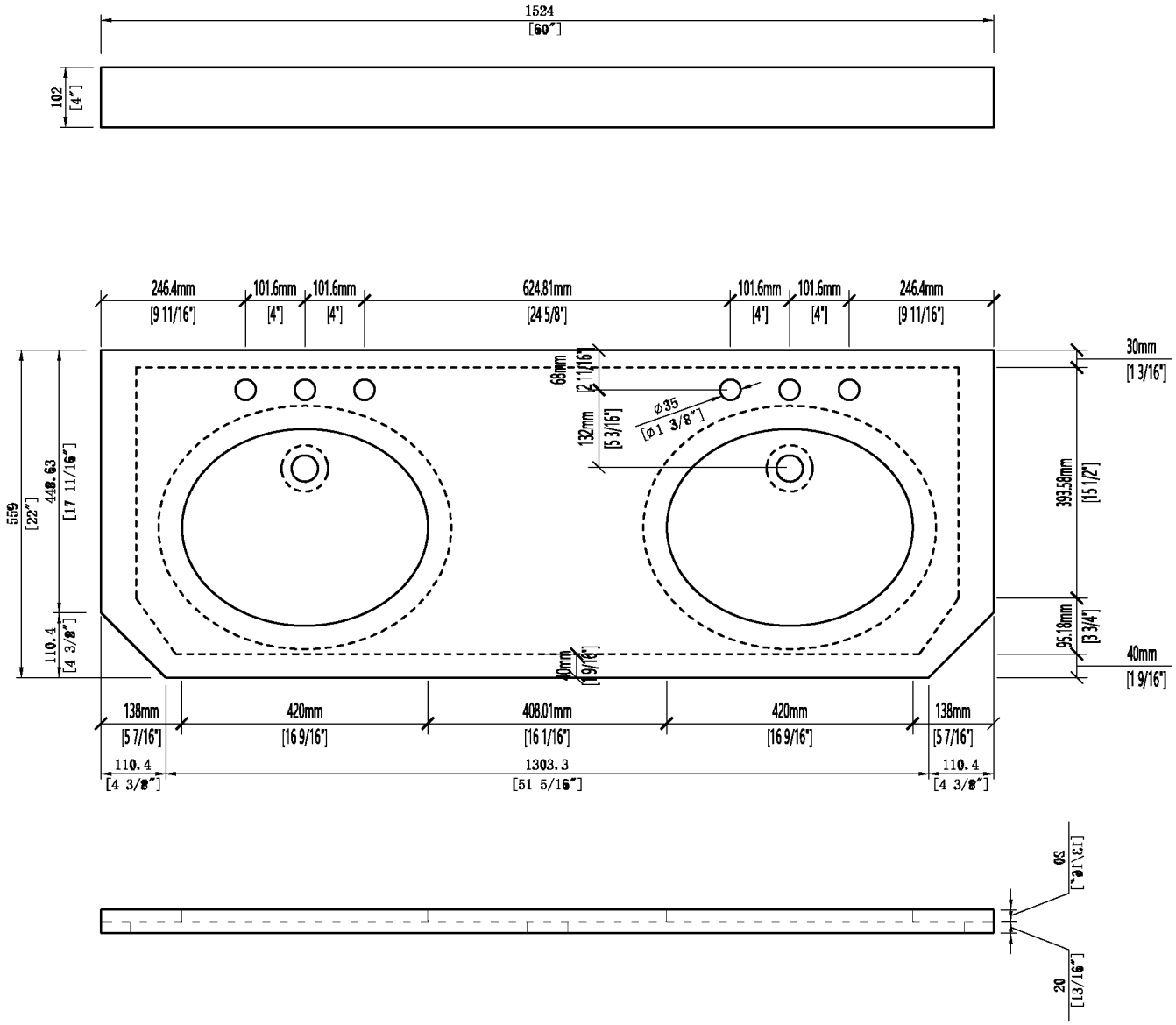
1524
[60"]
102
[4"]
246.4mm
[9 11/16"]
101.6mm
[4"]
101.6mm
[4"]
624.81mm
[24 5/8"]
101.6mm
[4"]
101.6mm
[4"]
246.4mm
[9 11/16"]
30mm
[1 3/16"]
68mm
[2 11/16"]
132mm
[5 3/16"]
ø35
[ø1 3/8"]
559
[22"]
448.63
[17 11/16"]
110.4
[4 3/8"]
393.58mm
[15 1/2"]
95.18mm
[3 3/4"]
40mm
[1 9/16"]
40mm
[1 9/16"]
138mm
[5 7/16"]
420mm
[16 9/16"]
408.01mm
[16 1/16"]
420mm
[16 9/16"]
138mm
[5 7/16"]
110.4
[4 3/8"]
1303.3
[51 5/16"]
110.4
[4 3/8"]
30
[1 3/16"]
20
[13/16"]

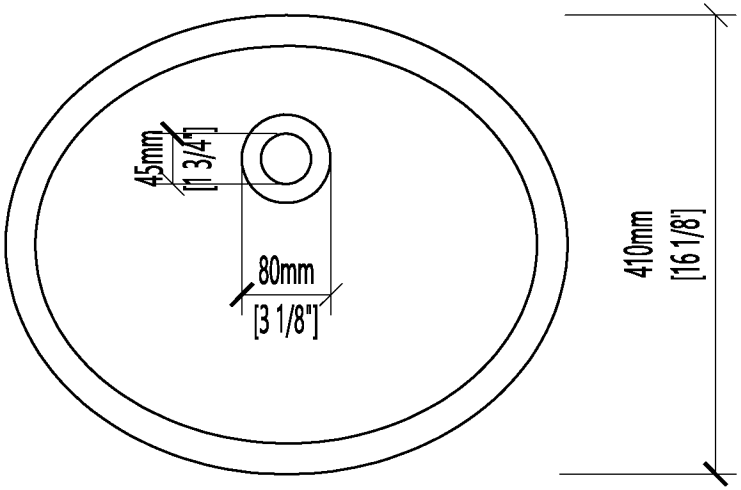
45mm
[1 3/4"]
80mm
[3 1/8"]
410mm
[16 1/8"]

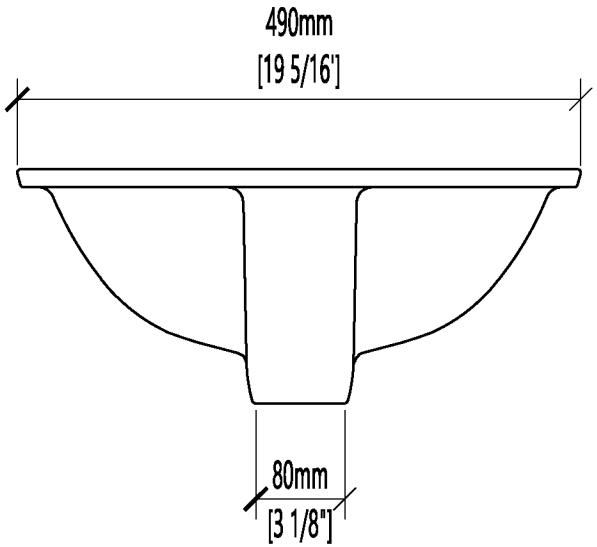
490mm
[19 5/16"]
80mm
[3 1/8"]

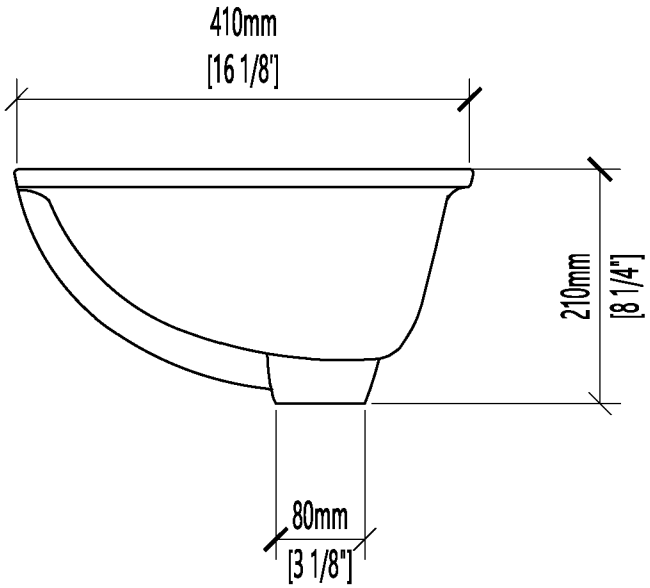
410mm
[16 1/8"]
210mm
[8 1/4"]
80mm
[3 1/8"]

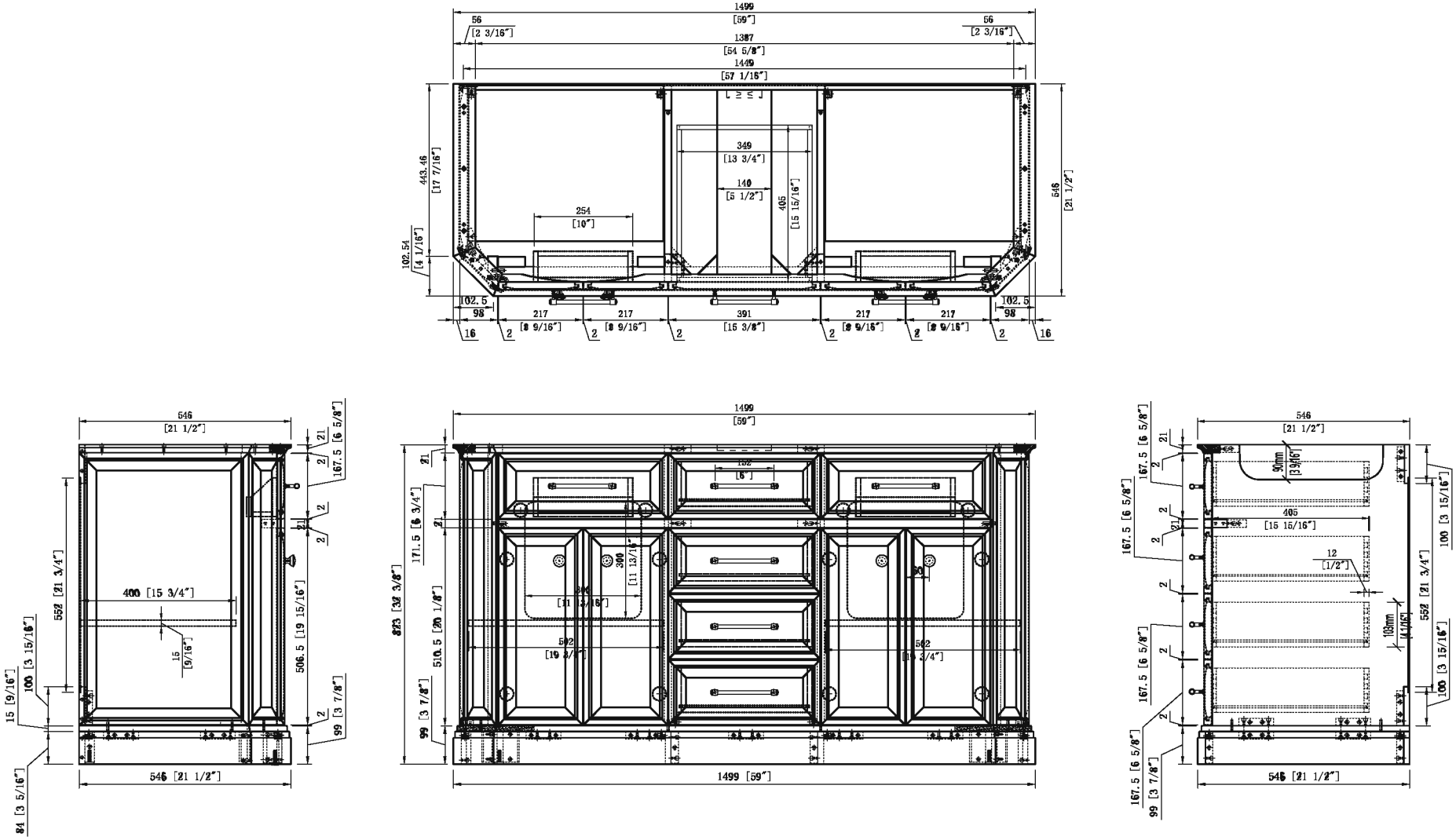
1499
[59"]
56
[2 3/16"]
1387
[54 5/8"]
1449
[57 1/16"]
443.46
[17 7/16"]
102.54
[4 1/16"]
546
[21 1/2"]
349
[13 3/4"]
140
[5 1/2"]
405
[15 15/16"]
254
[10"]
102.5
98
217
[8 9/16"]
391
[15 3/8"]
16
2
21
167.5 [6 5/8"]
552 [21 3/4"]
400 [15 3/4"]
15
[9/16"]
506.5 [19 15/16"]
100 [3 15/16"]
15 [9/16"]
99 [3 7/8"]
84 [3 5/16"]
546 [21 1/2"]
171.5 [6 3/4"]
823 [32 3/8"]
510.5 [20 1/8"]
99 [3 7/8"]
152
[6"]
300
[11 13/16"]
206
[8 1/8"]
502
[19 3/4"]
30
90mm
[3 9/16"]
12
[1/2"]
108mm
[4 1/4"]

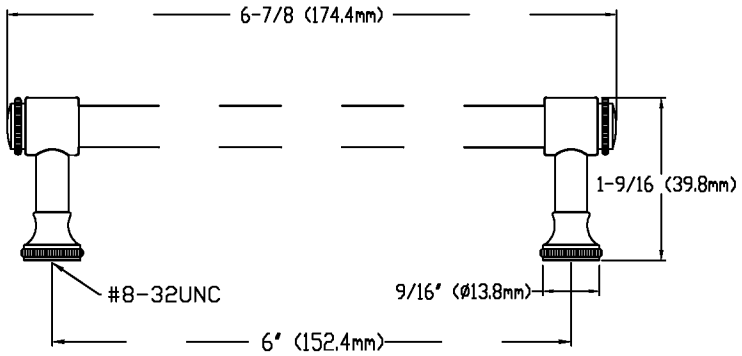
6-7/8 (174.4mm)
1-9/16 (39.8mm)
#8-32UNC
9/16" (Ø13.8mm)
6" (152.4mm)

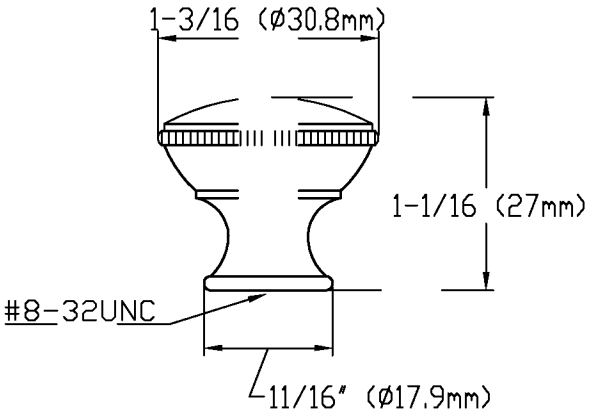
1-3/16 (Ø30.8mm)
1-1/16 (27mm)
#8-32UNC
11/16" (Ø17.9mm)