INSTRUCTION

Dining Table

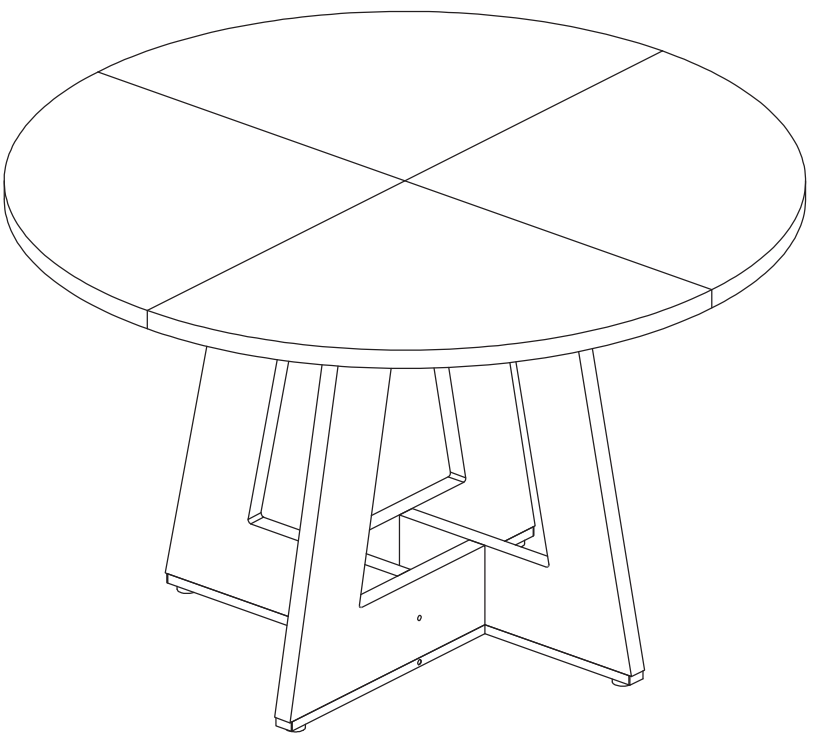

NOTICE

Please keep these instructions for future reference.

Dear Customer

● Thank you for your purchase. When you receive the product, please make sure that all the parts are intact. If any parts are missing, please contact us promptly to request replacement parts.

● Then follow the entire installation instructions to install.

● Each part is crucial, so please be careful not to lose any. It is recommended to store parts with different lettered identifiers in separate boxes or bags to avoid confusion during installation.

A . The outer box is damaged

B . The product is damaged / bent / cracked while you open the box

C . The parts / accessories / assembly tools are missing

D . The instructions are not clear and can not be referred

E . The product has functional problems

F . Other aspects that you are not satisfied with

Please feel free to contact us for help. Our after-sales team service will reply within 24 hours and will do our best to resolve the problem for you.

EXPLODED VIEW

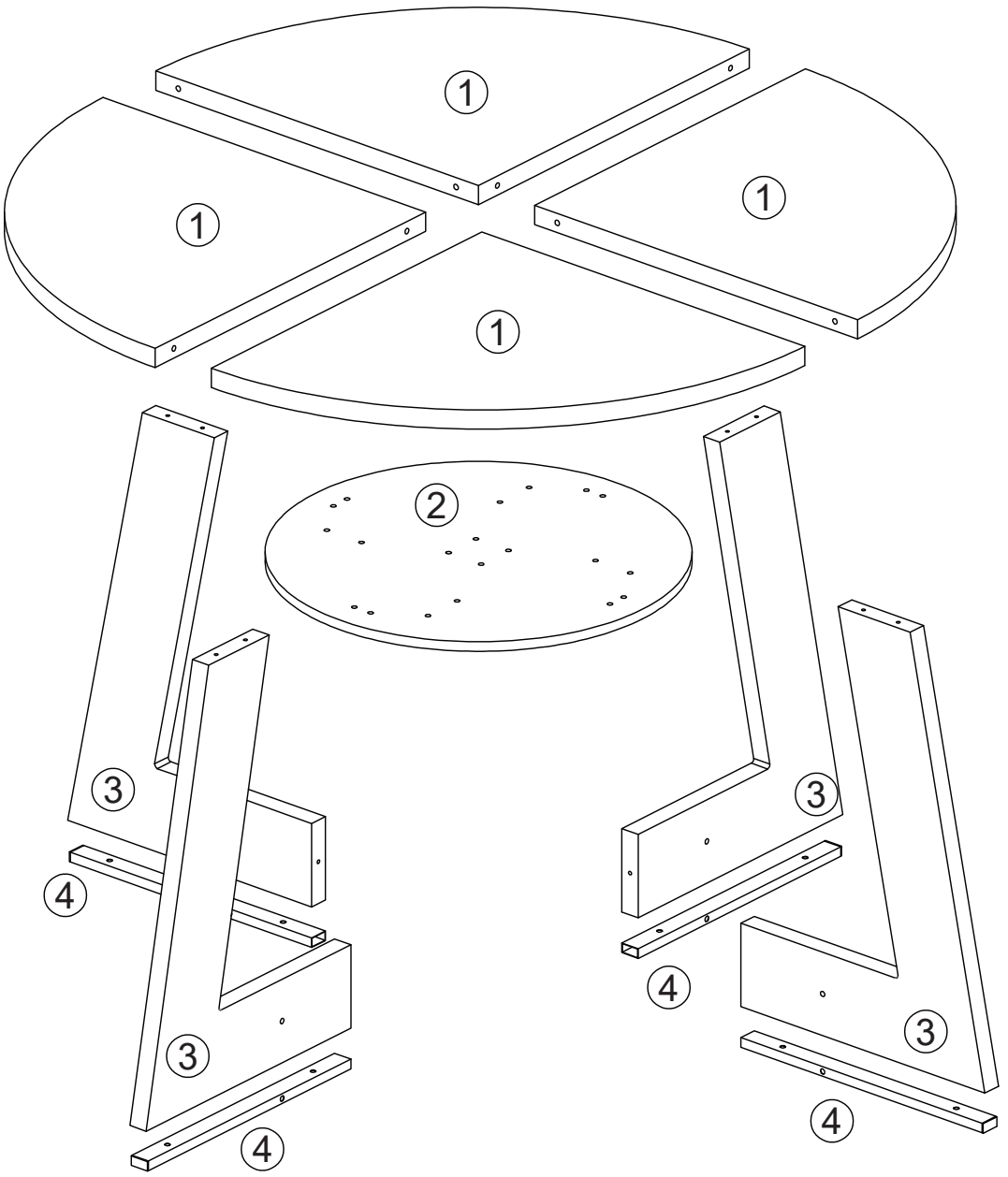

A	X12+1	B	X4	C	X16+1	D	X4	E	X8
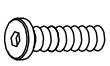		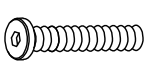		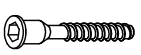					
M6x30mm		M6x50mm		7x37mm		7x47mm		8x30mm	

F	X4	G	X1
		M4	

01

Please first tighten the screws to 75%.

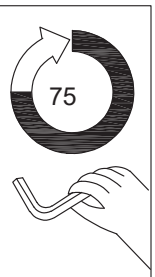

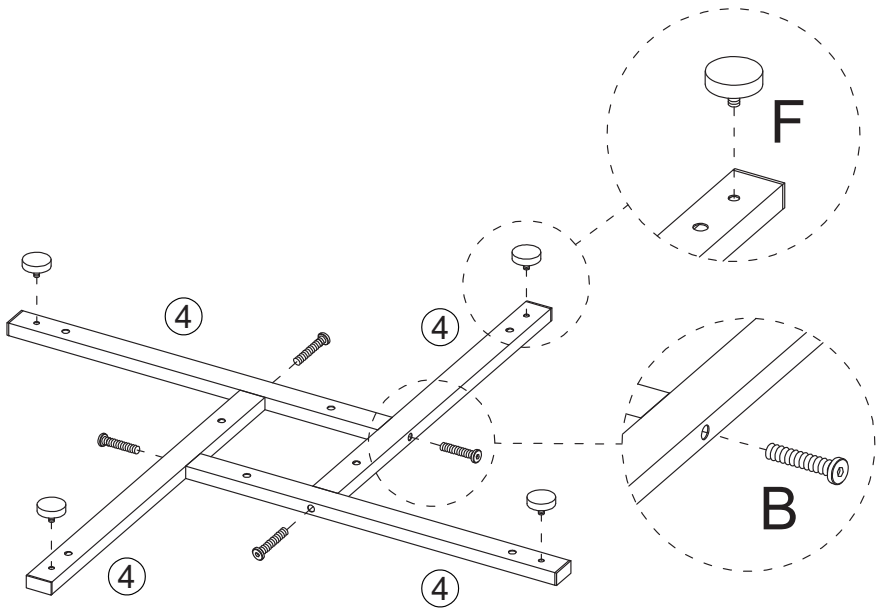

B	X4	F	X4
M6x50mm			

02

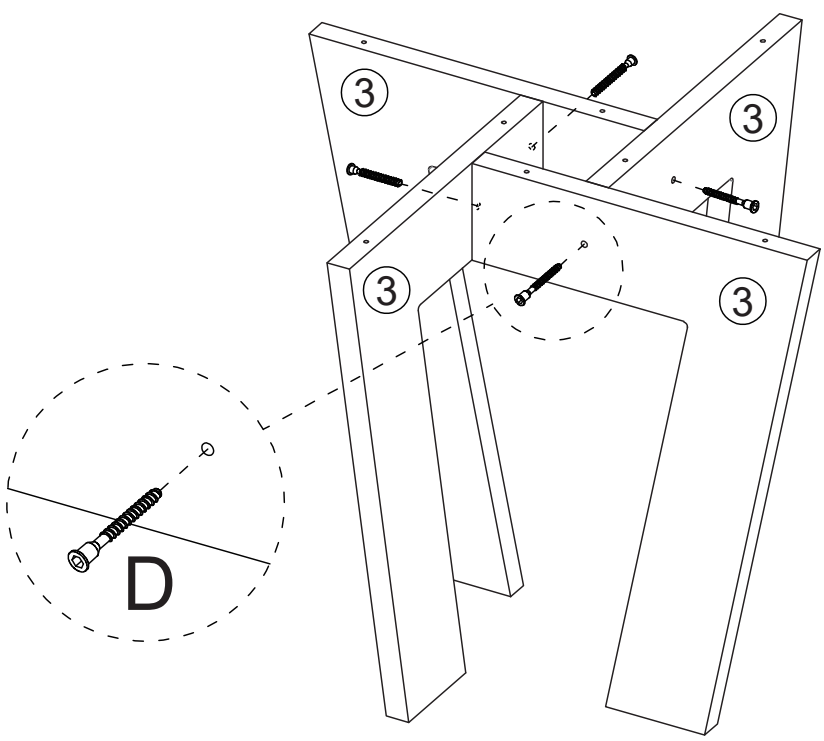

D	X4
7x47mm	

03

Install the base before tightening all screws.

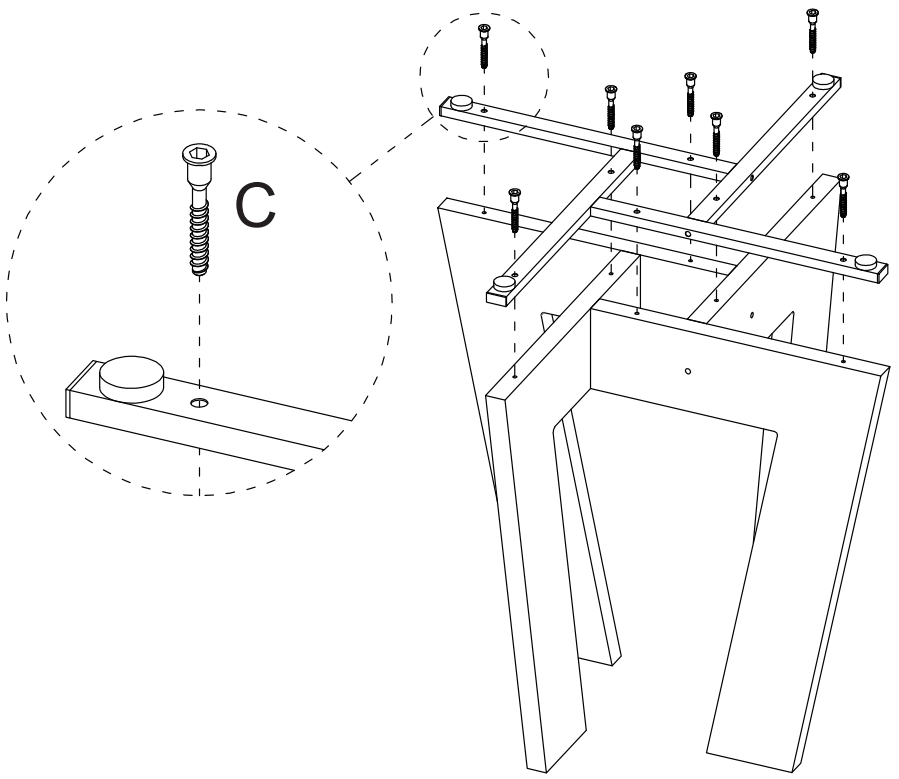

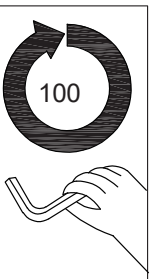

C	X8
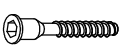	
7x37mm	

04

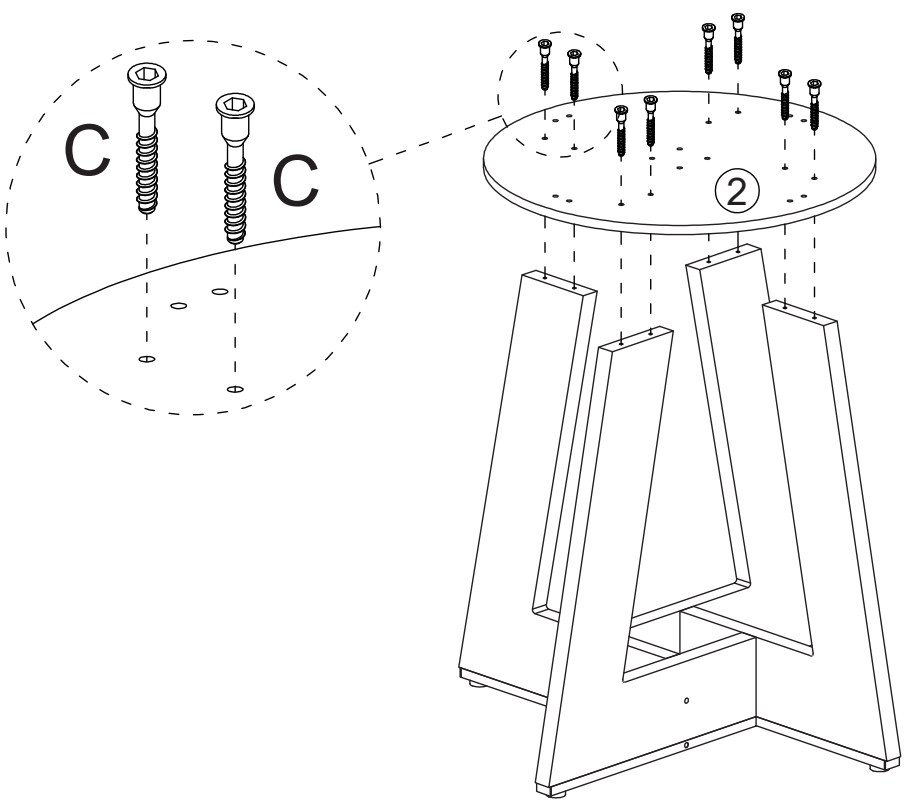

C	X8
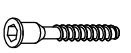	
7x37mm	

05

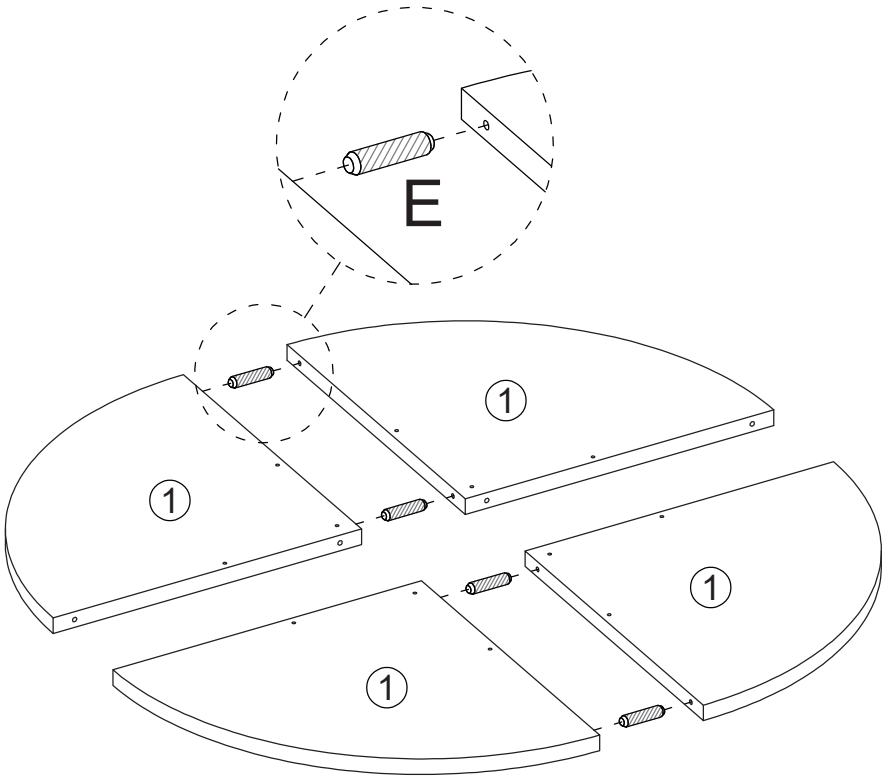

E	X4
8x30mm	

06

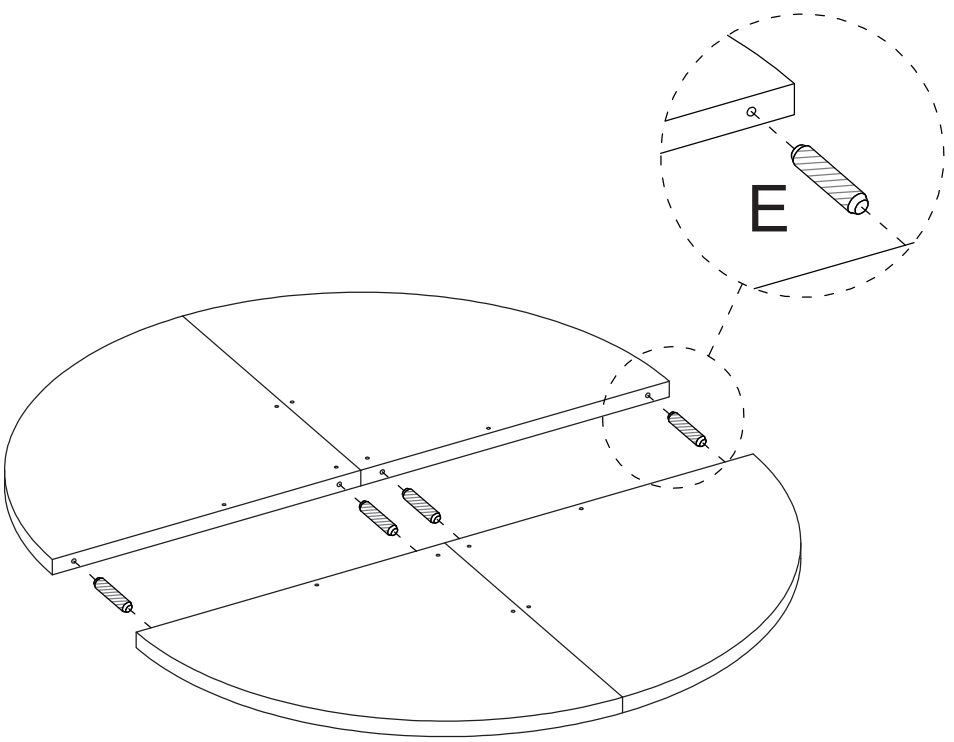

E	X4
8x30mm	

07

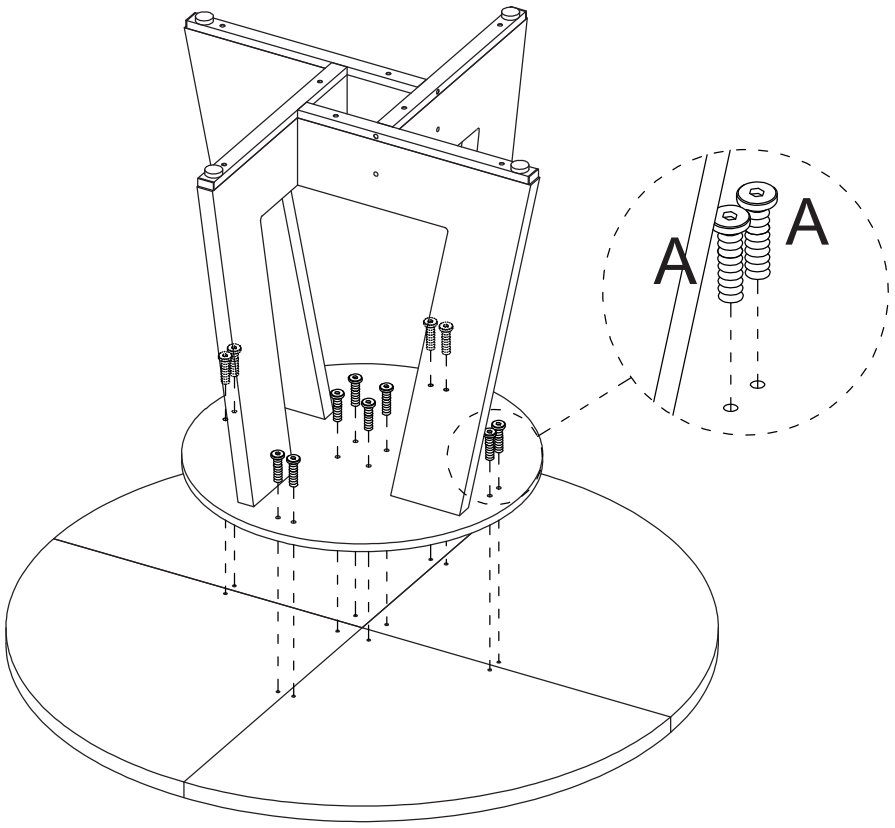

A	X12
M6x30mm	

08

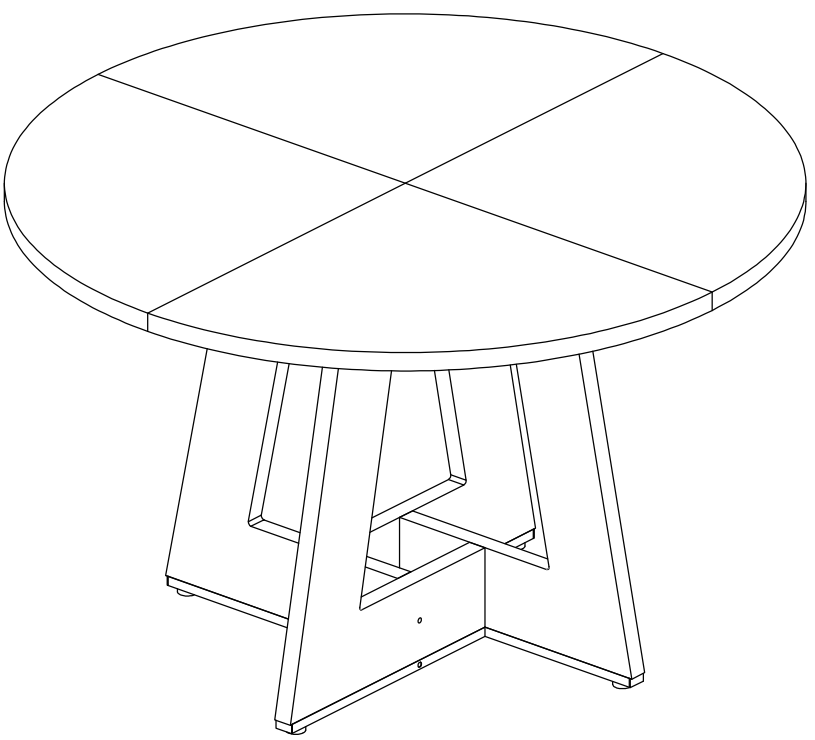

AFTER-SALE SERVICE

If you have any suggestions for our products or notice any quality issues, please contact us first. Our after-sales team will respond within 24 hours and will do everything possible to provide you with a satisfactory solution.

Guaranteed Customer Service

Your shopping experience is very important to us!
Feel unsatisfied? **Contact us!**
Have any questions? **Contact us!**

Wanna Share how wonderful our smart products make your home?

Share your pictures with us.
Any suggestions? **Contact us!**
We will check and give feedback.