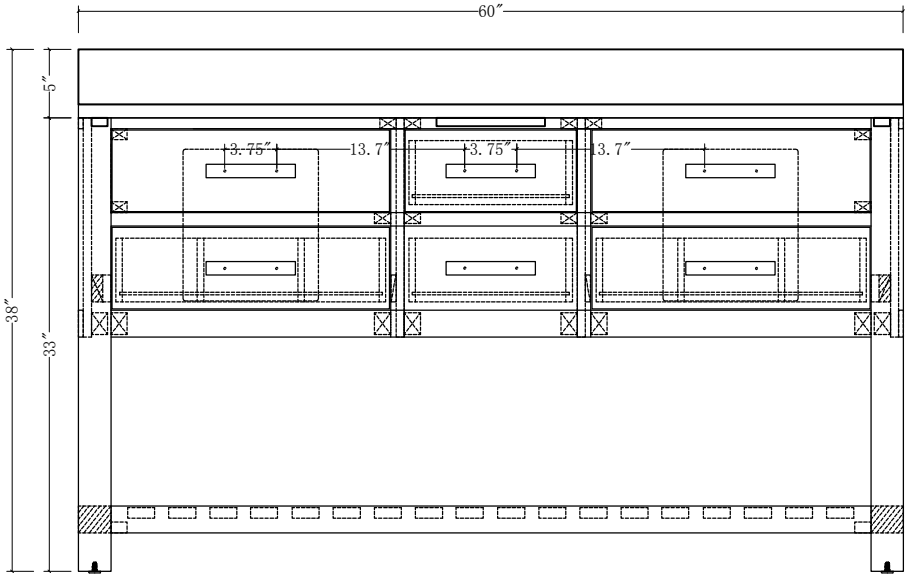
60″
5″
38″
33″
3.75″
13.7″
3.75″
13.7″

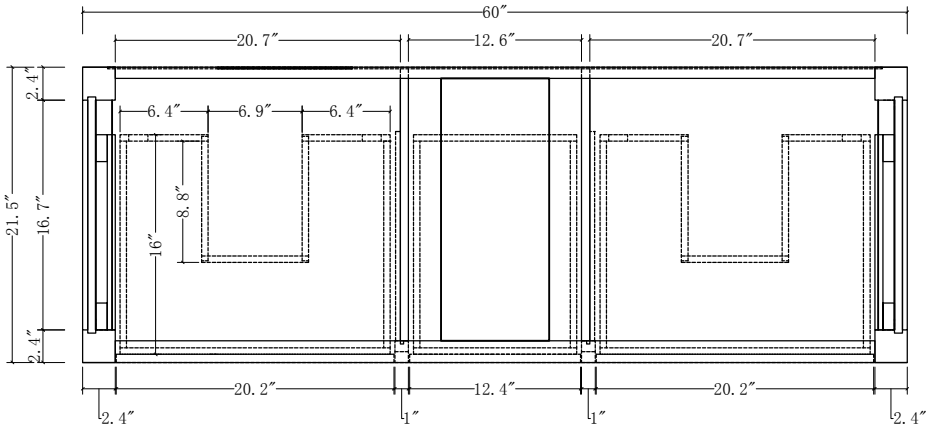
60″
20.7″
12.6″
20.7″
2.4″
6.4″
6.9″
6.4″
8.8″
16″
21.5″
16.7″
2.4″
20.2″
12.4″
20.2″
2.4″
1″
1″
2.4″

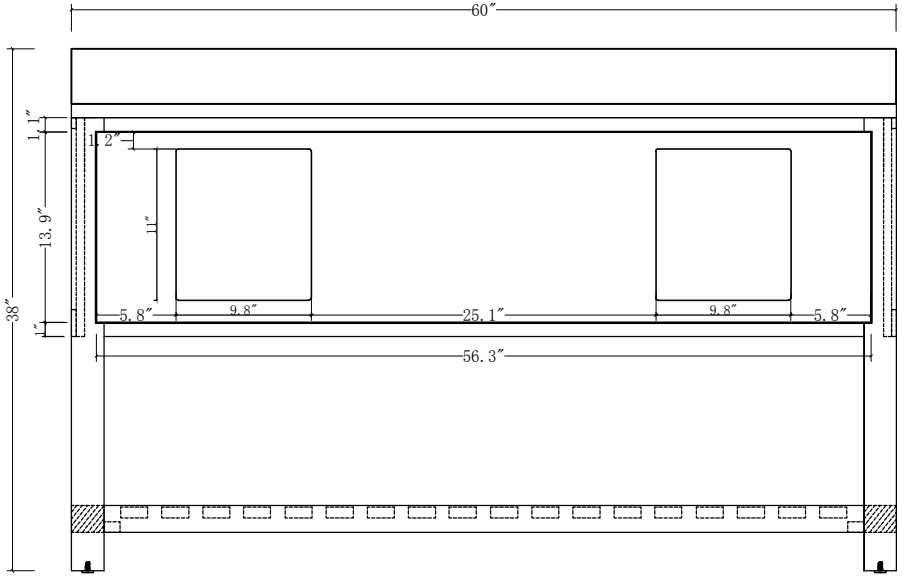
60″
1.1″
1.2″
11″
13.9″
38″
1″
5.8″
9.8″
25.1″
9.8″
5.8″
56.3″

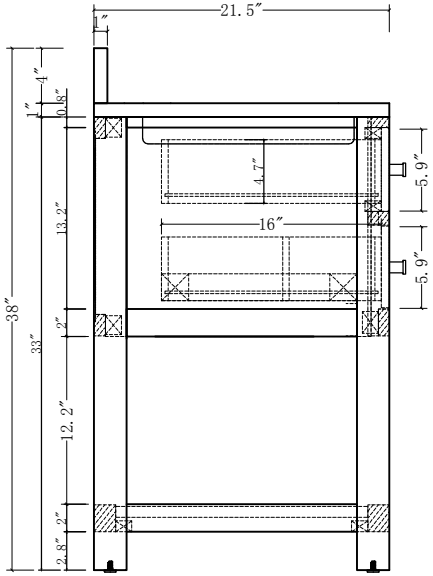
21.5″
1″
4″
1″
0.8″
4.7″
16″
5.9″
5.9″
13.2″
38″
33″
2″
12.2″
2″
2.8″

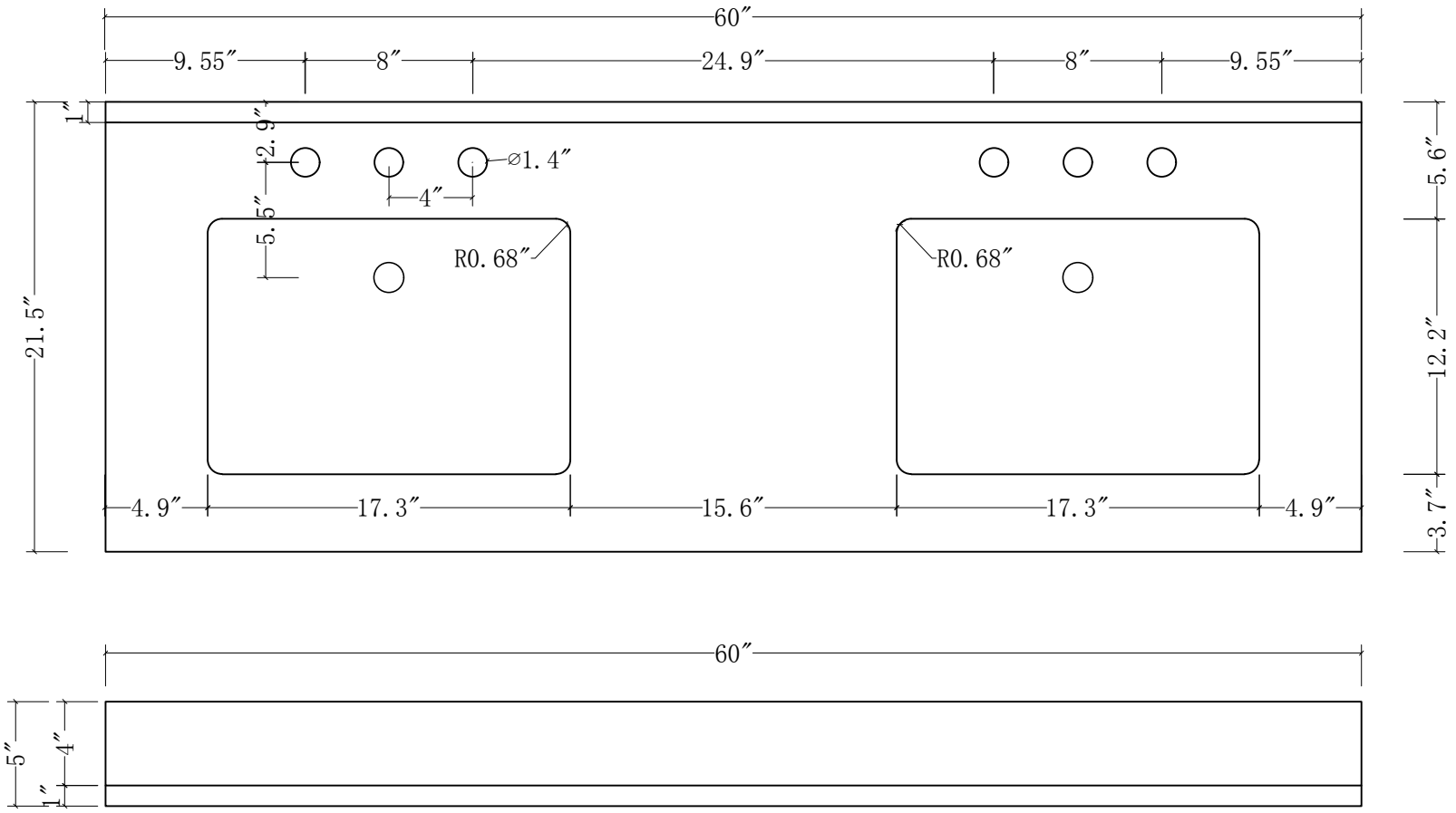
60″
9.55″
8″
24.9″
8″
9.55″
1″
2.9″
⌀1.4″
4″
5.5″
R0.68″
R0.68″
21.5″
5.6″
12.2″
3.7″
4.9″
17.3″
15.6″
17.3″
4.9″
60″
5″
4″
1″

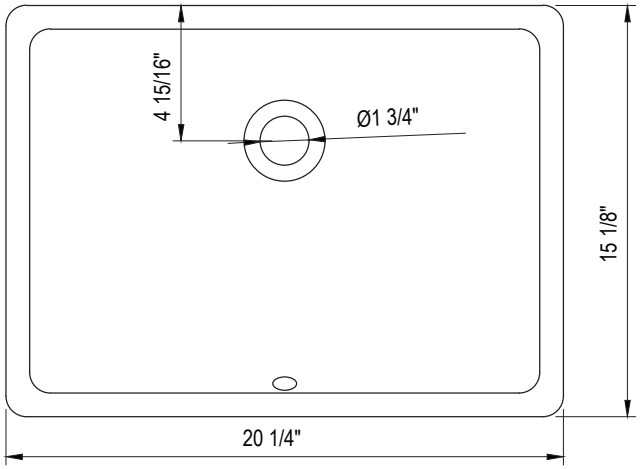
4 15/16"
Ø1 3/4"
15 1/8"
20 1/4"

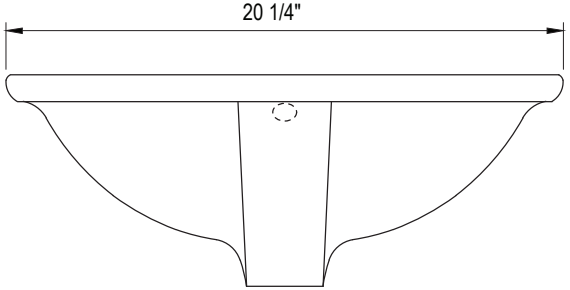
20 1/4"

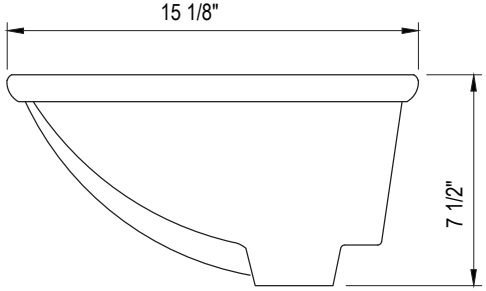
15 1/8"
7 1/2"

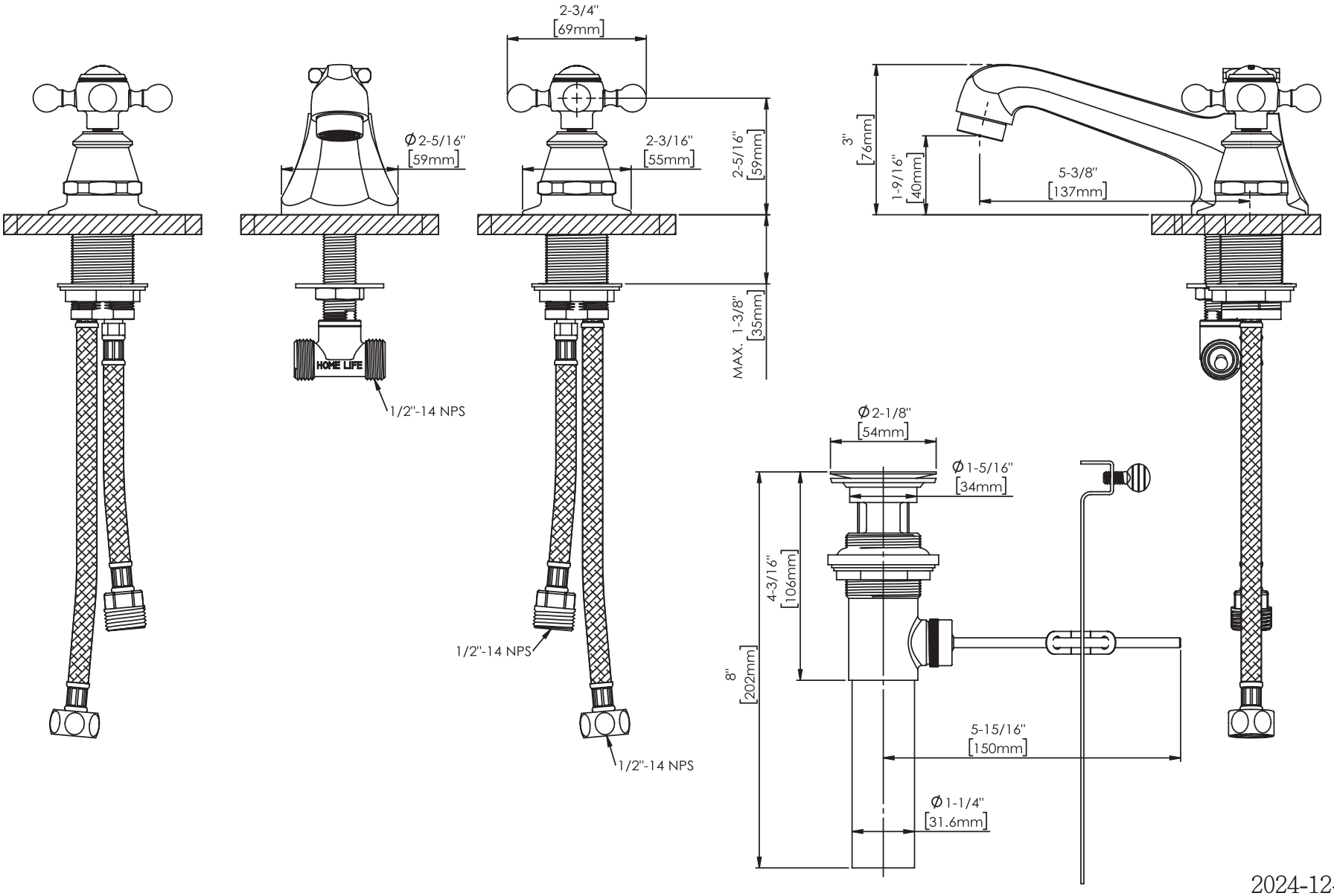
2-3/4"
[69mm]
Ø2-5/16"
[59mm]
2-3/16"
[55mm]
2-5/16"
[59mm]
MAX. 1-3/8"
[35mm]
HOME LIFE
1/2"-14 NPS
1/2"-14 NPS
1/2"-14 NPS
3"
[76mm]
1-9/16"
[40mm]
5-3/8"
[137mm]
Ø2-1/8"
[54mm]
Ø1-5/16"
[34mm]
4-3/16"
[106mm]
8"
[202mm]
5-15/16"
[150mm]
Ø1-1/4"
[31.6mm]

2024-12-19