ASSEMBLY INSTRUCTIONS

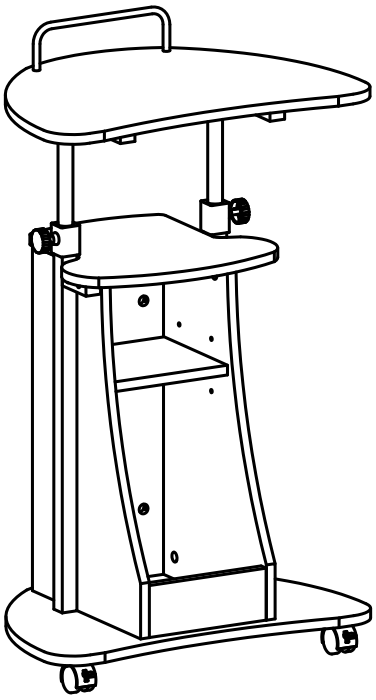

Thank you for purchasing our product!

MAIN PARTS LIST

#1 Left Side

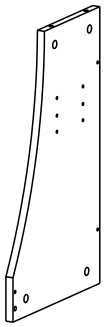

#2 Right Side

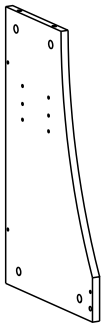

#3L Locking caster

x2

#3N Non-Locking Casters

x2

#4 Back

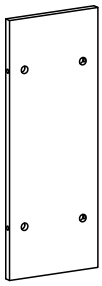

#5 Front Lower

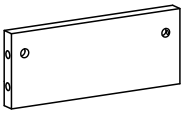

#6 Adjustable shelf

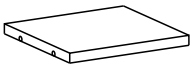

#7 Bottom Base

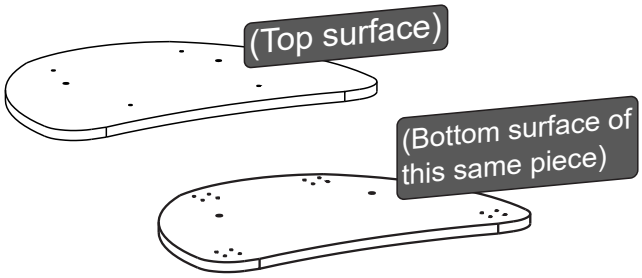

#8 Upper shelf

#9 Lateral Support Bars

x2

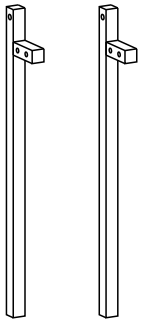

#10 Lift Tubes

x2

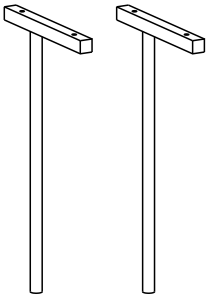

#11A Adjustment covers

x2

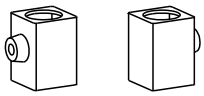

#11B Height Knob

x2

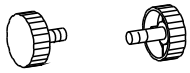

#12 Tabletop

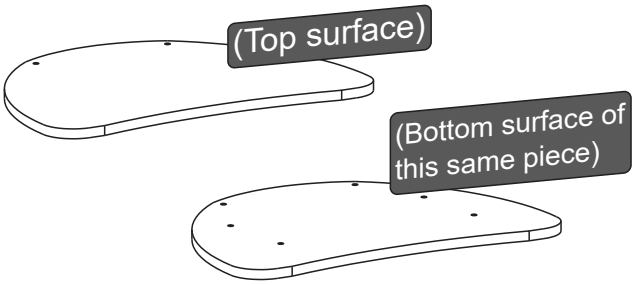

#13 Top protection tube

For Support, Assembly Questions & Replacement Parts <u>Within the 48 *Contiguous* United States</u>

Replacement Parts for International Customers & **AK-HI-PR** orders:
RTA Products will replace the part free of charge, while **<u>the customer is responsible for shipping costs plus any International local taxes or duties</u>**.

Main parts Layout (For Reference)

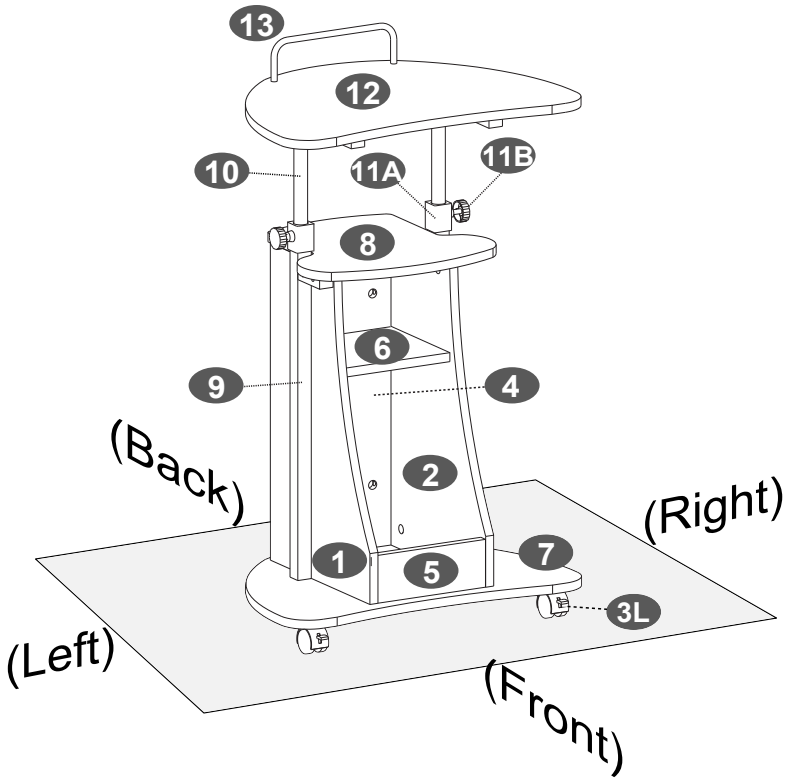

Hardware

No.	Item	Qty.
A	M4x14	16 Pcs
B	M6x25	2 Pcs
C	M6x35	10 Pcs
D	M6x40	14 Pcs
E	Ø5x17mm	4 Pcs
F	Ø15mm	14 Pcs
G	Ø8x30	2 Pcs

Tools included

Phillips Screwdriver

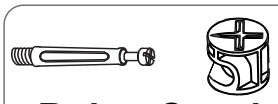

Bolt **Cam lock**

In some of the assembly steps you will use bolts and cam locks (also known as mini-fix). If you are not familiar with this kind of hardware, the below is a tutorial that explains how to use them.

The instructions below are ONLY A TUTORIAL for bolts and cam locks. The actual assembly starts on the next page.

1. Install the bolt into the first panel.

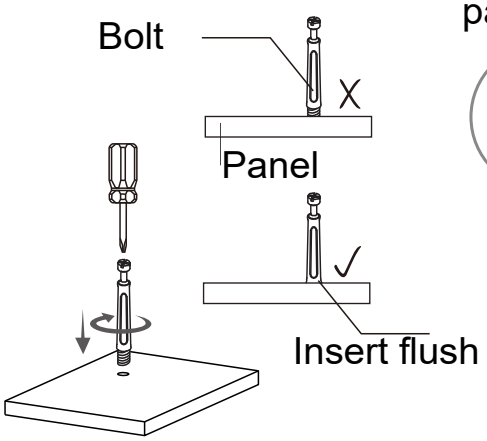

2. Join the second panel by inserting it into the bolt of the first panel.

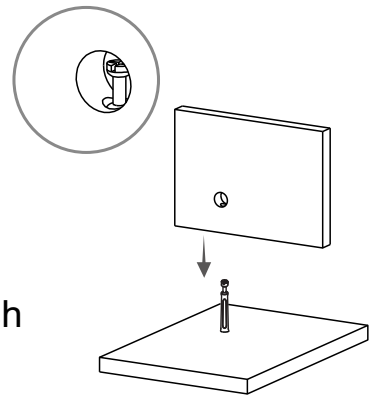

3. Insert the cam lock and turn it to lock both panels.

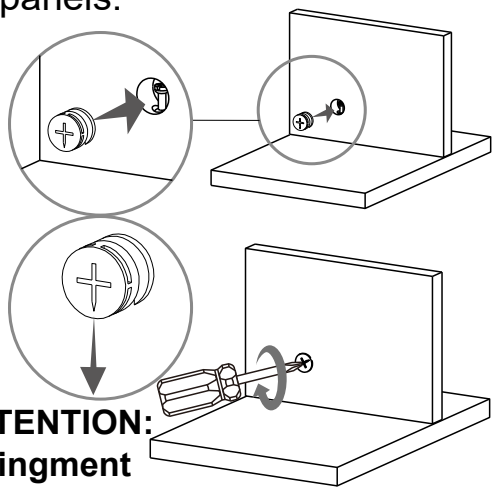

ATTENTION: Alingment

ASSEMBLY STEPS

WE RECOMMEND TO PLACE THE PIECES OVER BLANKETS OR TABLECLOTHS TO PROTECT THEIR FINISH DURING ASSEMBLY.

STEP 1

This step requires of 2 people

Hardware		
D	M6x40	3 Pcs
F	Ø15mm	3 Pcs
G	Ø8x30	2 Pcs

Tools (included)

FIRST: Insert G into the indicated holes on #5.

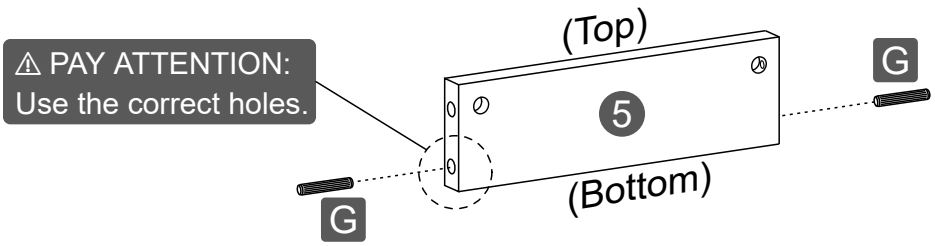

THEN: Attach D to #1 into the indicated holes.

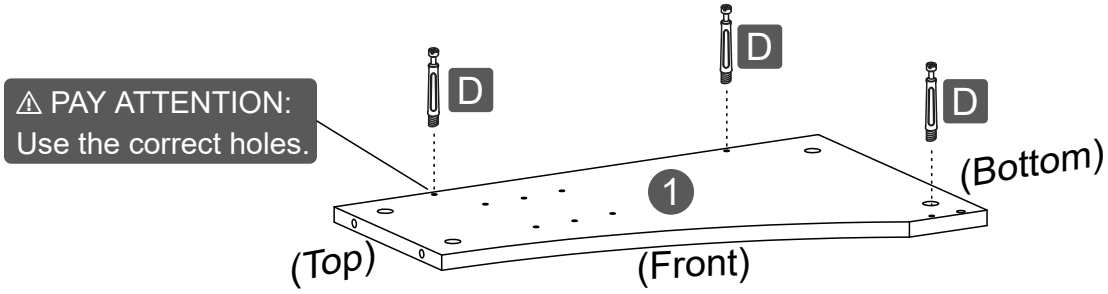

LAST: Assemble #4 and #5 to #1 with F as explained in the Tutorial Page.

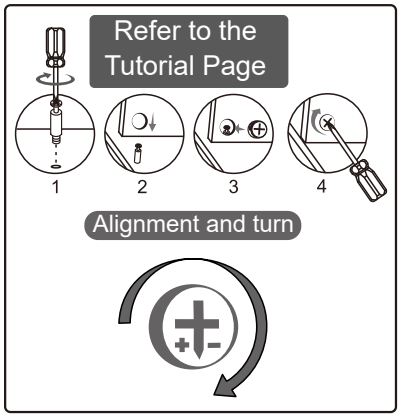

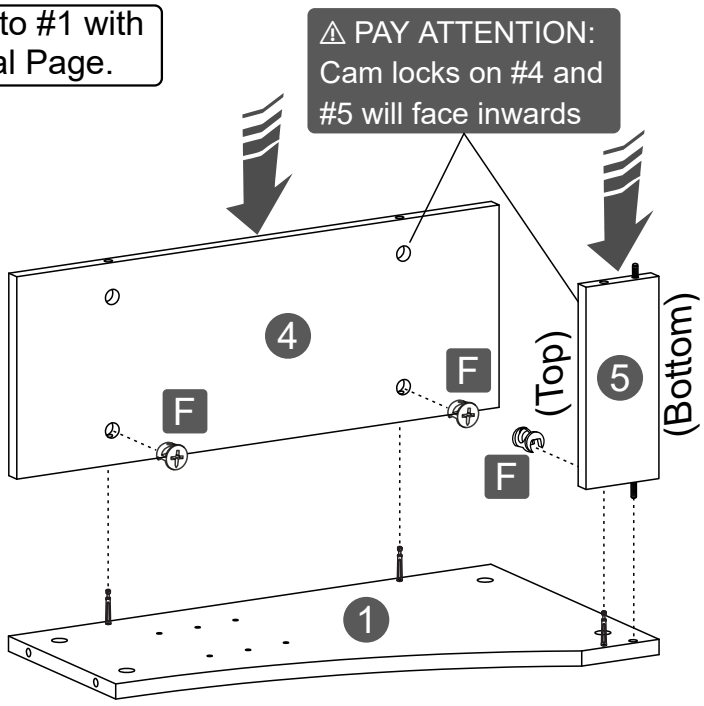

ASSEMBLY STEPS

STEP 2

Hardware

D	M6x40	3 Pcs
F	Ø15mm	3 Pcs

Tools (included)

Assemble #2 to #4 and #5 with D and F as explained in the Tutorial page.

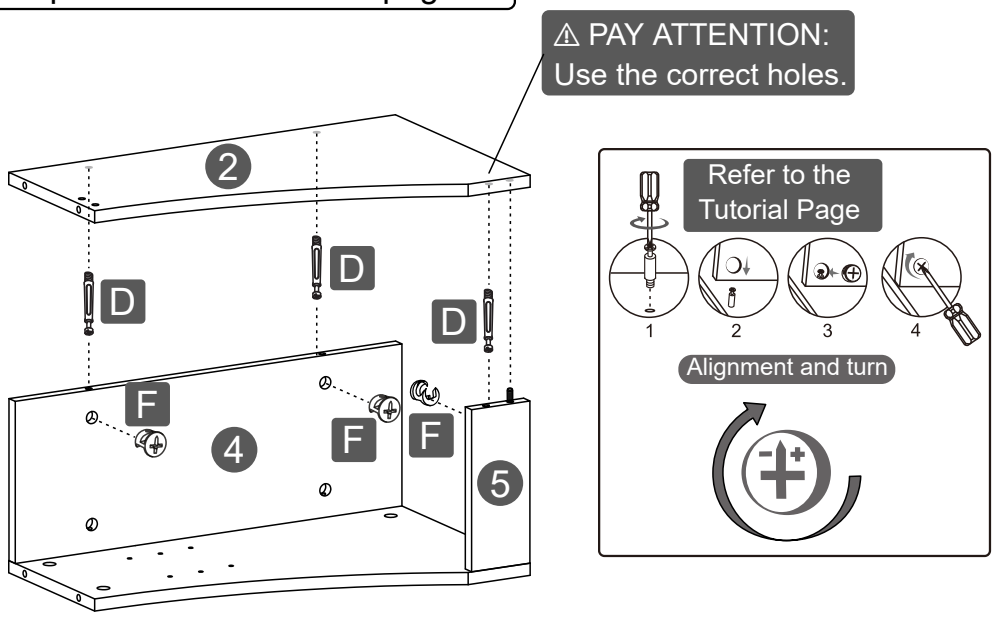

STEP 3

Hardware

A	M4x14	16 Pcs

Tools (included)

Use A to attach to the bottom surface of #7:
- #3L at the FRONT;
- #3N at the BACK.

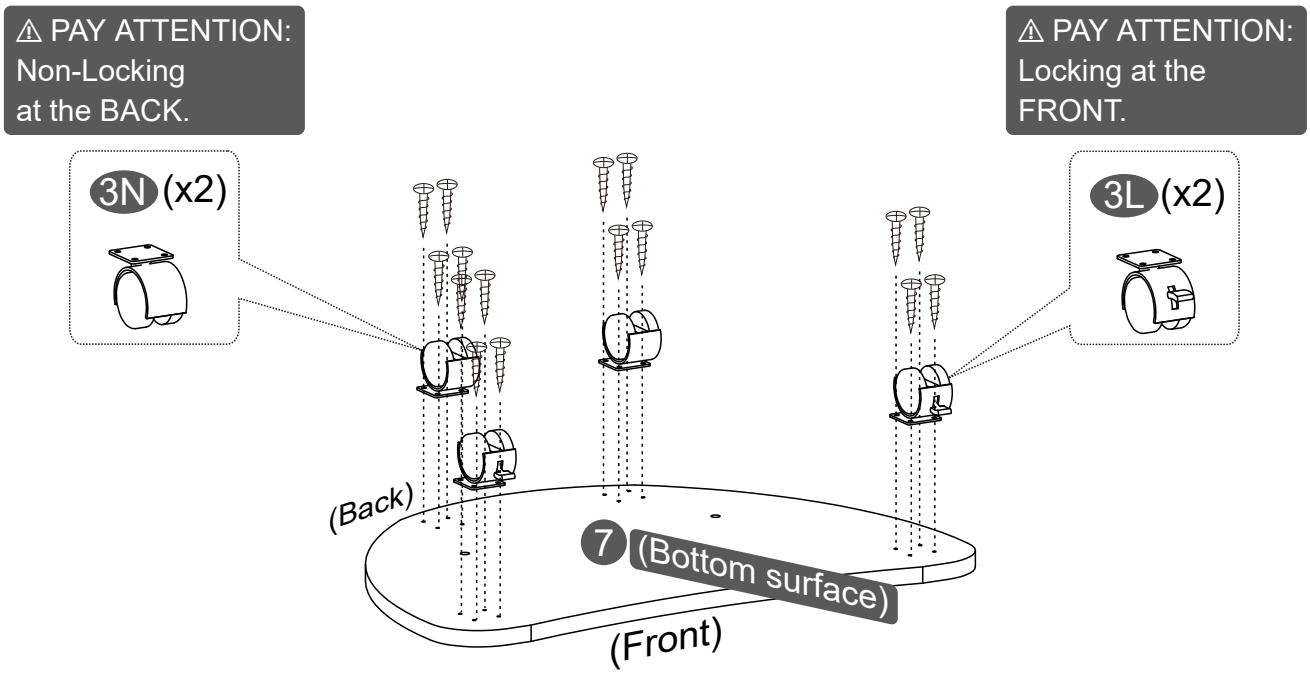

ASSEMBLY STEPS

STEP 4

Hardware		
D	M6x40	4 Pcs
F	Ø15mm	4 Pcs

Tools (included)

Assemble #1 and #2 to #7 with D and F as explained in the Tutorial page.

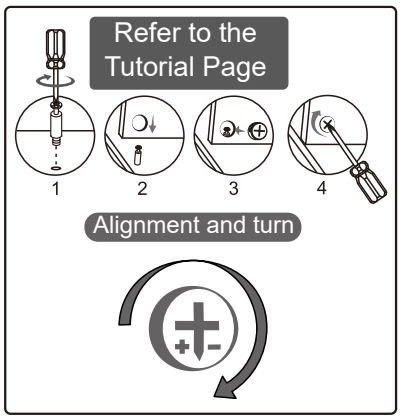

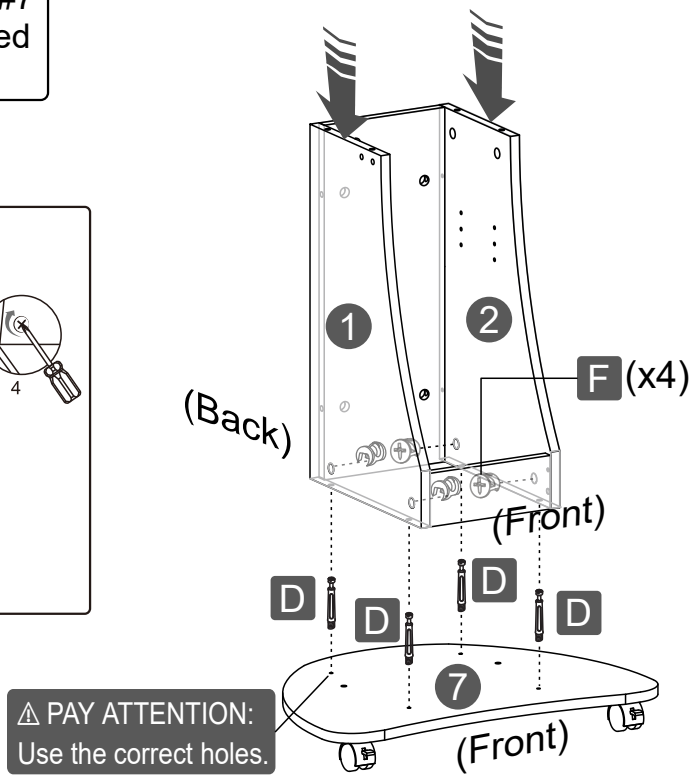

STEP 5

Hardware		
D	M6x40	4 Pcs
F	Ø15mm	4 Pcs

Tools (included)

Assemble #8 to #1 and #2 with D and F.

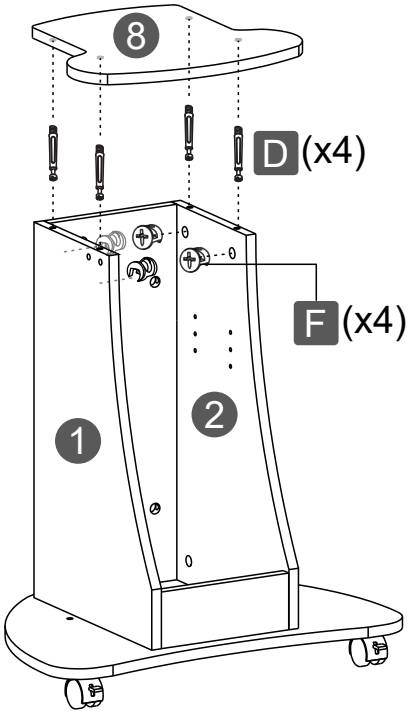

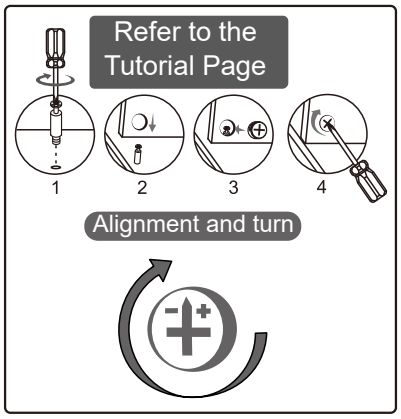

ASSEMBLY STEPS

STEP 6

Hardware

C	M6x35	6 Pcs

Tools (included)

FIRST: Attach #9 to #1 and #2 with C.

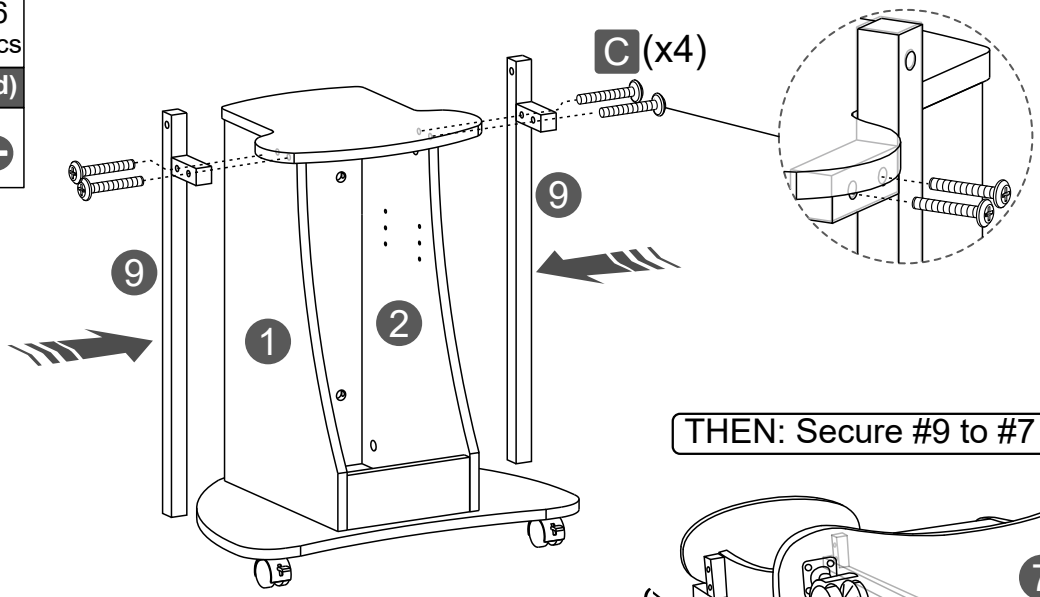

THEN: Secure #9 to #7 with C.

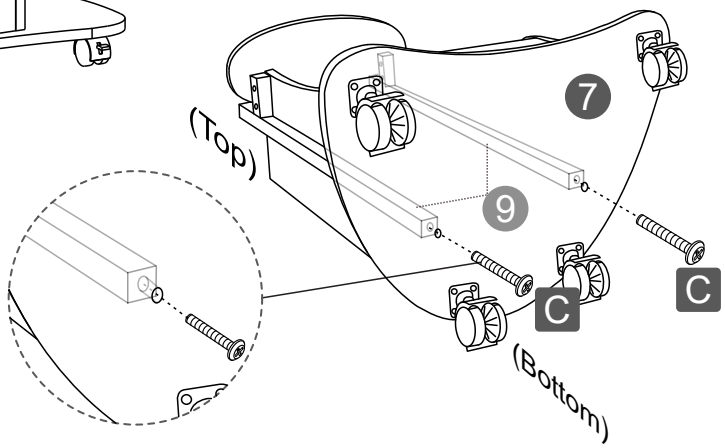

STEP 7

Hardware

C	M6x35	4 Pcs

Tools (included)

Attach #10 to #12 with C.

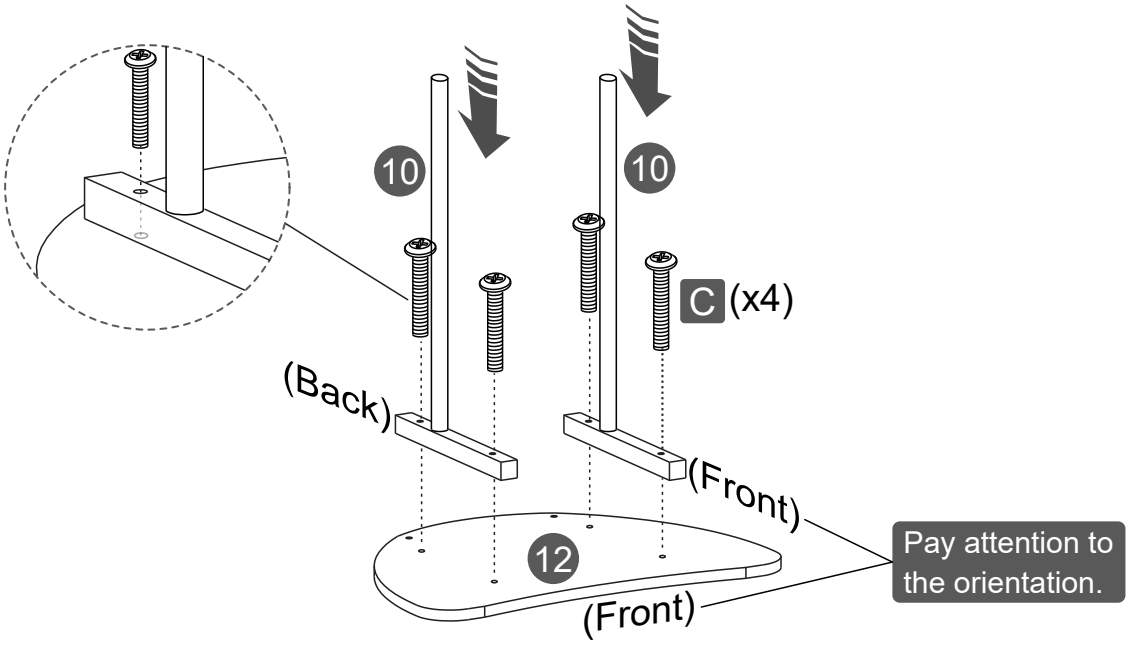

ASSEMBLY STEPS

STEP 8

FIRST: Install #11A over #9.

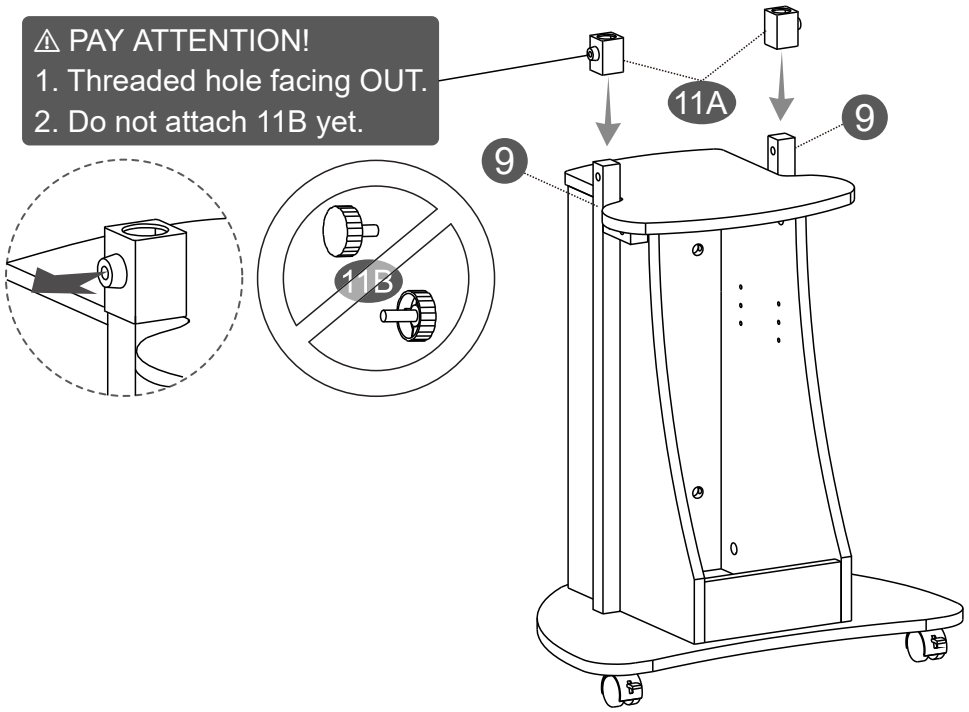

THEN: Insert #10 through #11A and into #9, and secure with #11B.

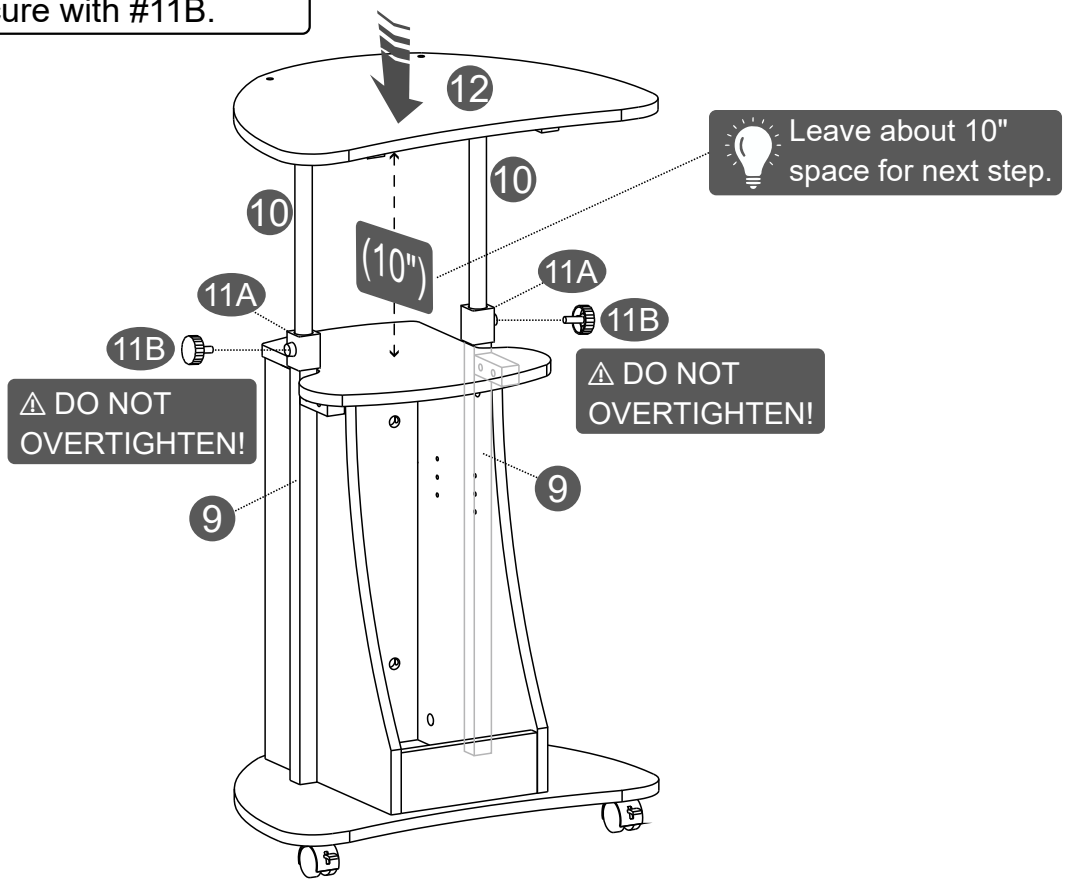

ASSEMBLY STEPS

STEP 9

Hardware		
B	M6x25	2 Pcs
E	Ø5x17mm	4 Pcs

Tools (included)

FIRST: Attach #13 to #12 with B.

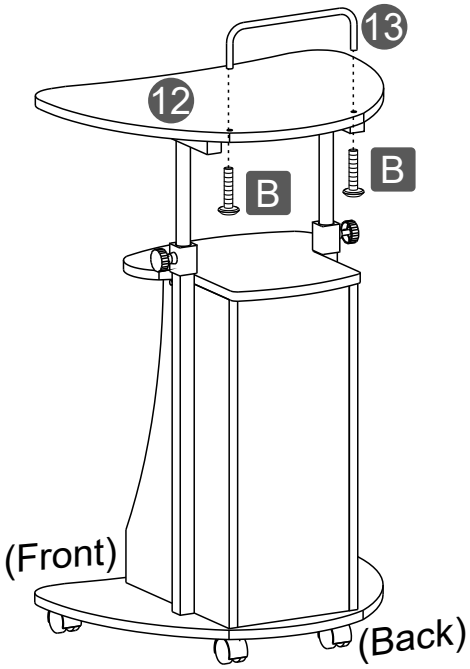

FINALLY: Attach E into the set of holes of your choice on #1 and #2, and install #6 over the pins.

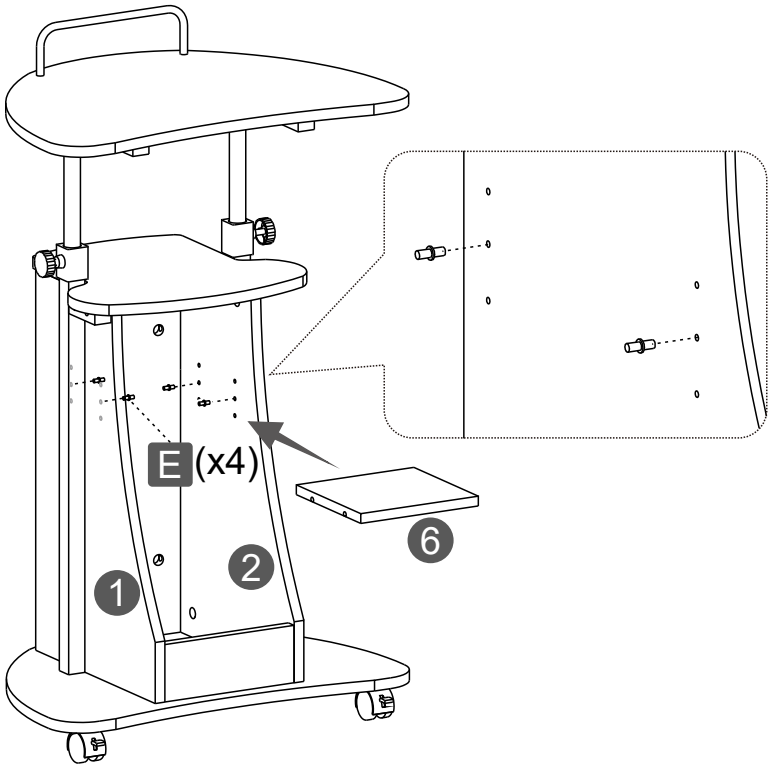

ALL DONE! Give yourself a nice pat on the back, you did a great job!
Please continue on the following pages for important information.

FUNCTIONS / ADJUSTMENTS / WARNINGS

LIFTING: Loosen #16, lift or lower the tabletop simultaneously on both sides, and tighten #16 again.

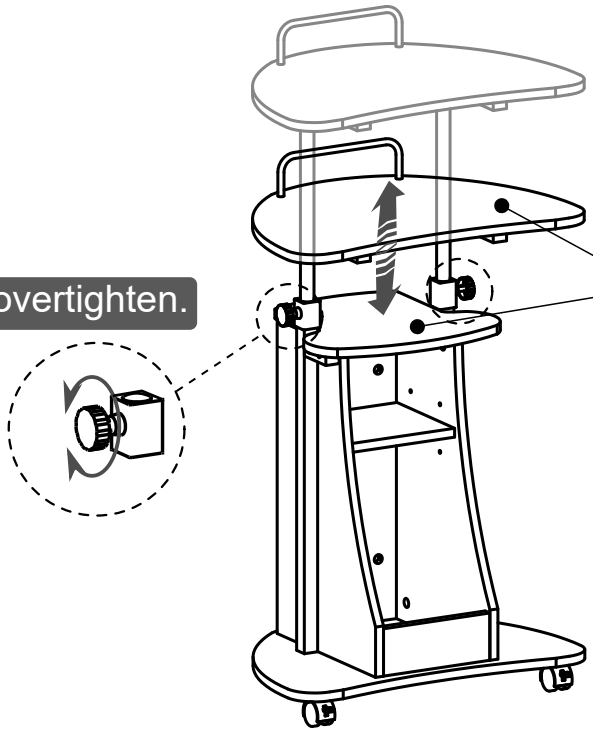

⚠ Do not overtighten.

⚠ Use caution for objects over or under the tabletop when adjusting the height.

ROLLING: Unlock the front casters #3L to allow free movement.

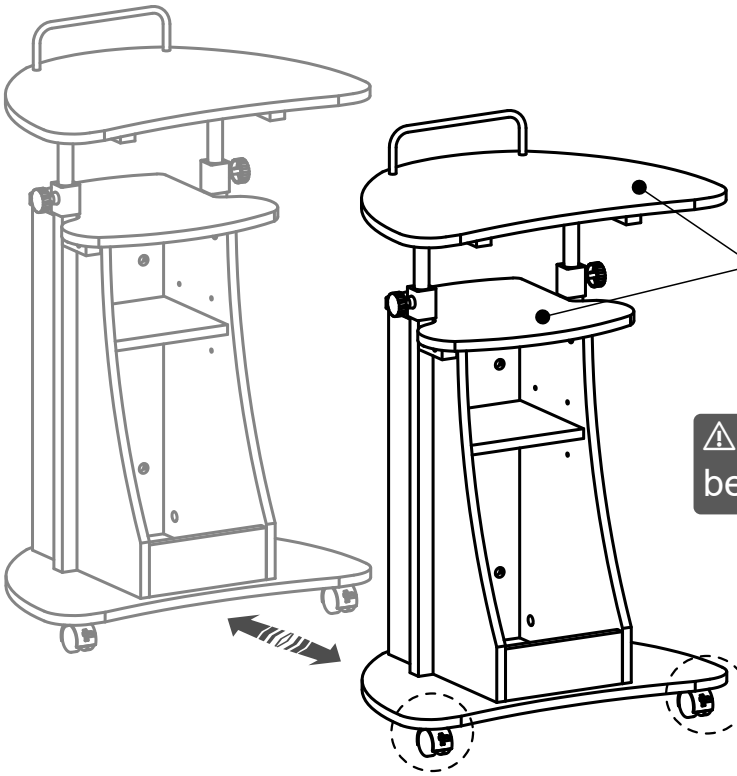

⚠ Use caution for objects over or under the tabletop when rolling the unit.

⚠ Unlock the front casters before moving the unit.

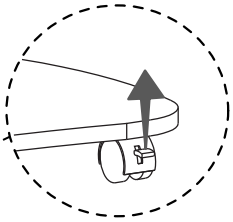

WARNINGS

Not paying attention to the following warnings could result in injuries.

WEIGHT LIMITS - DO NOT EXCEED

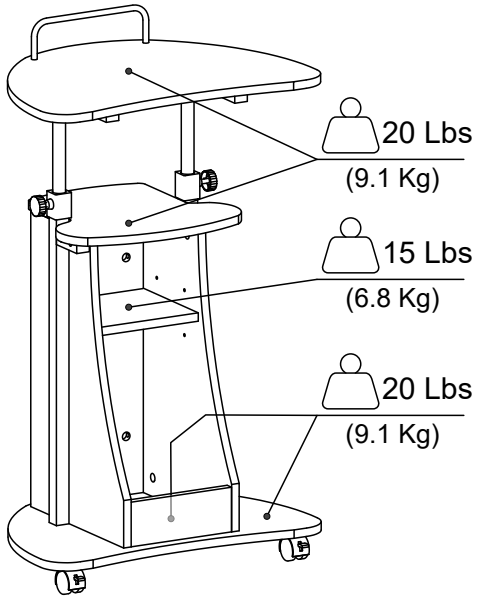

- Do not sit, climb or stand on the Unit.
- Do not allow children to climb or play with the unit.

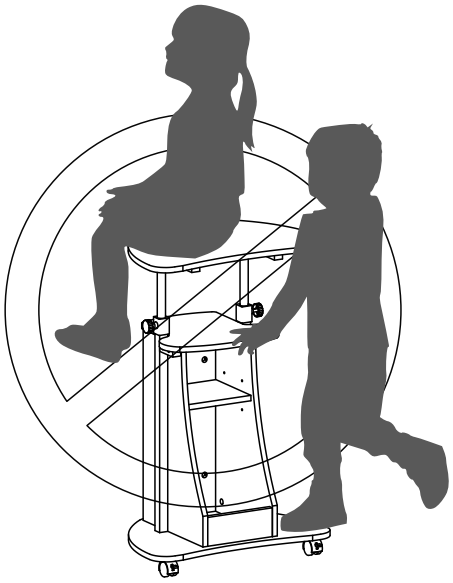

Please refer to all the warnings in the previous page before adjusting the height or rolling functions on the unit.

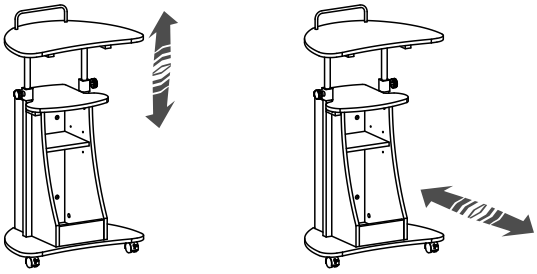

CARE AND MAINTENANCE

- Clean with a cloth lightly damped in a solution of mild soap and water.
- Do not use solvents or abrasive materials.

Do not expose to direct sunlight or extreme enviromental conditions.

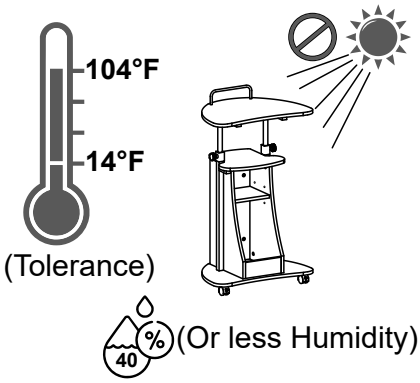

Inspect and re-tighten any loose screws every 4 months.

LIMITED WARRANTY