SKU:PHK_3364NFNM
PHK_3364XP43

Assembly Instruction

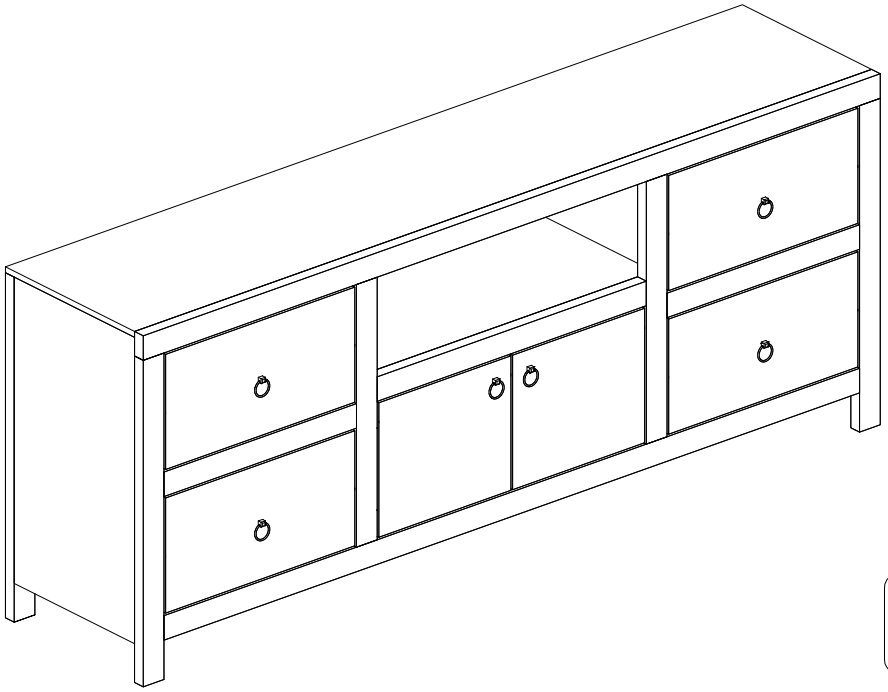

Team Assembly Recommended

Trouble shooting:

Missing / Wrong / Broken parts and installation issues

↓

Send email with your question pie ,order NO. and screenshot of order details to:

support@idealhouse.vip

↓

Respond within 24 hours

↓

Issue resolved

COMPONENTS ID Nr.

Part Nr.	Qty	Part Nr.	Qty	Part Nr.	Qty
1	1pcs	2	1pcs	3	1pcs
4	1pcs	5	1pcs	6	1pcs
7	1pcs	8	1pcs	9	1pcs
10	1pcs	11	1pcs	12	2pcs
13	1pcs	14	2pcs	15	2pcs
16	2pcs	17	1pcs	18	1pcs
19	1pcs	20	1pcs	21	1pcs
22	1pcs	23	1pcs	24	1pcs
25	1pcs				

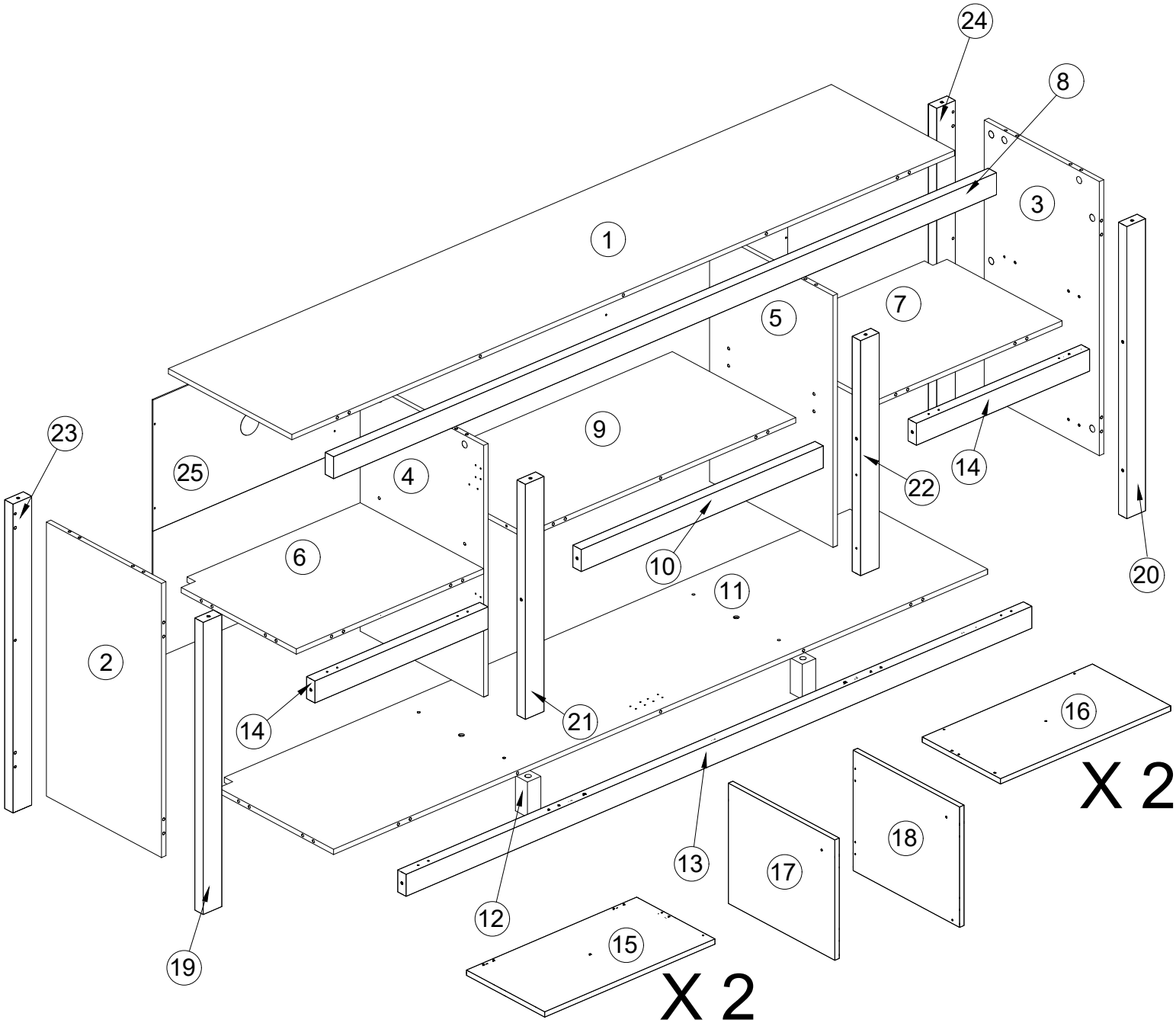

HARDWARE LIST

1 x 1 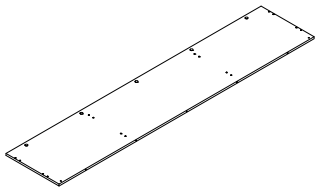	2 x 1 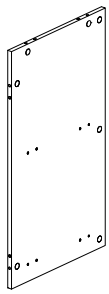	3 x 1 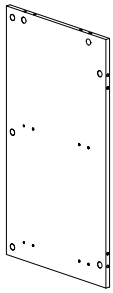	4 x 1 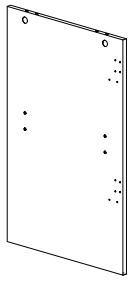
5 x 1 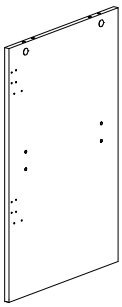	6 x 1 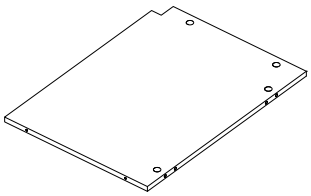	7 x 1 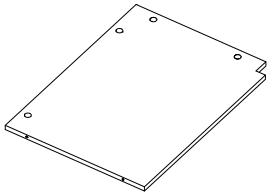	8 x 1 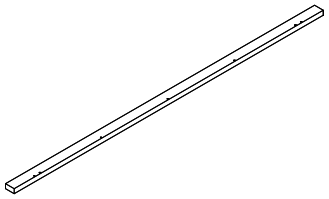
9 x 1 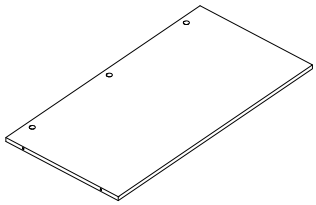	10 x 1 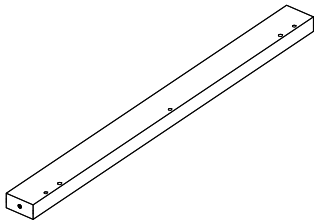	11 x 1 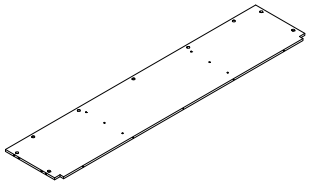	12 x 2 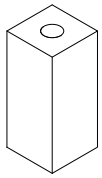
13 x 1 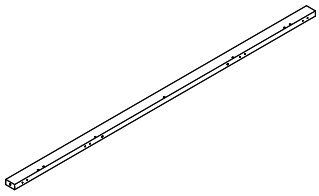	14 x 2 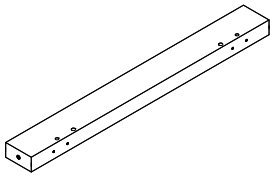	15 x 2 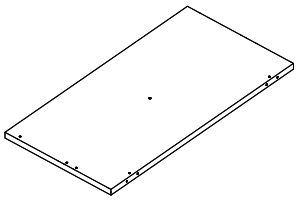	16 x 2 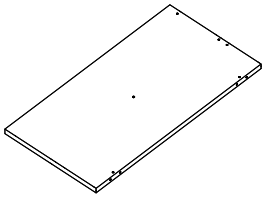
17 x 1 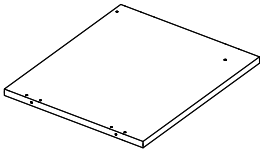	18 x 1 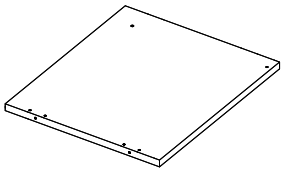	19 x 1 	20 x 1 
21 x 1 	22 x 1 	23 x 1 	24 x 1 

HARDWARE LIST

25 x 1 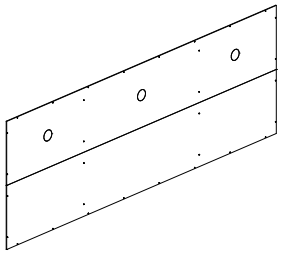			
A x 43 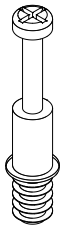	B x 43 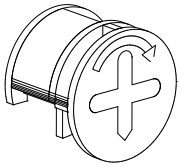 Ø15X9.5MM	C x 12 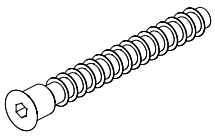 D5X40MM	D x 50 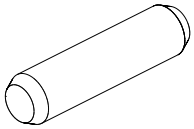 6X30MM
E x 70 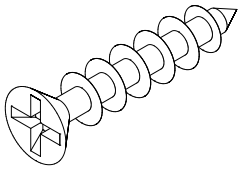 D3.5X12MM	F x 6 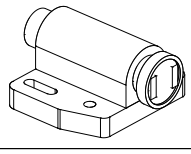 F-1 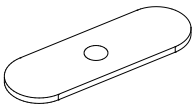 F-2	G x 2 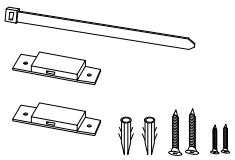	H x 32 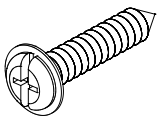 M3.5X12MM
J x 24 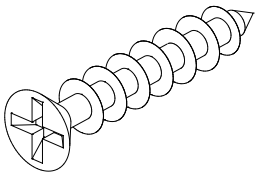 D3X16MM	K x 1 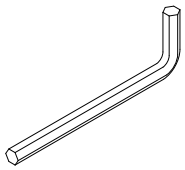 3#	L x 1 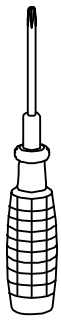 4#	M x 12 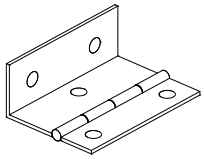
N x 2 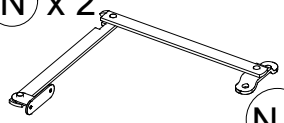 N-1 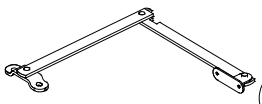 N-2	P x 1 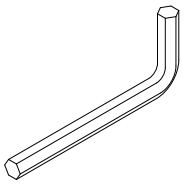 4#	Q x 6 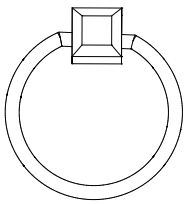	R x 2 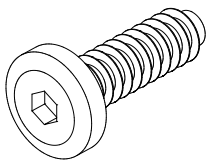 M6X20MM
S x 6 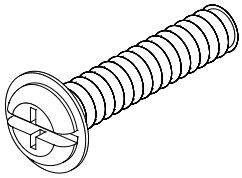 M4X15MM			

PRODUCT ASSEMBLY

1

Ø15X9.5MM 6X30MM

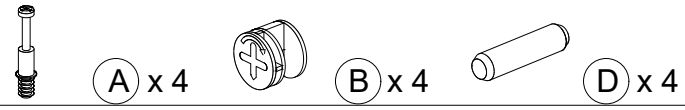

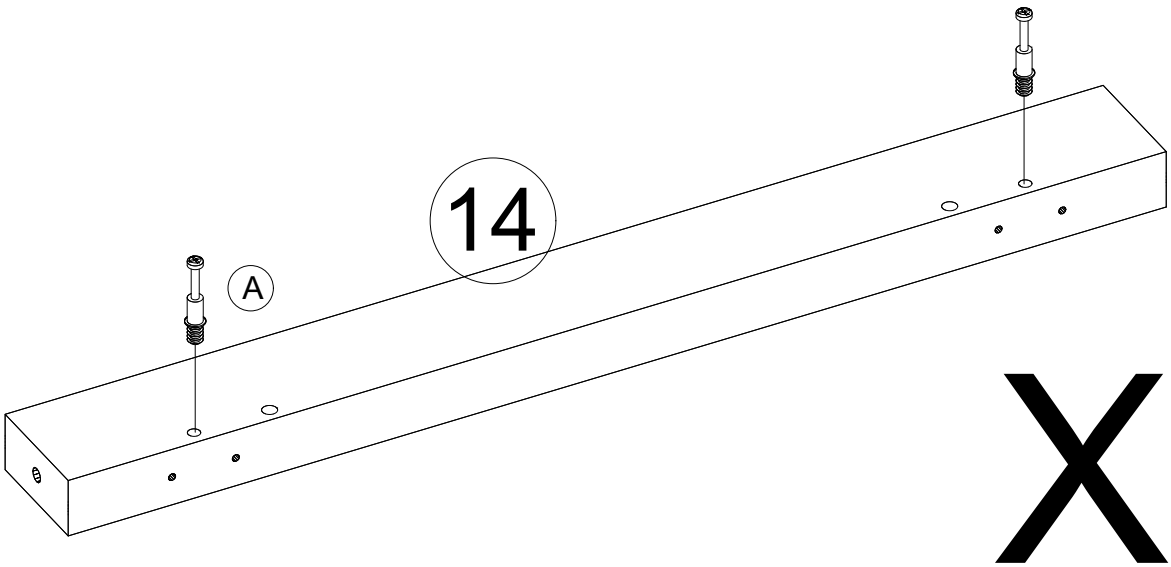

X 2

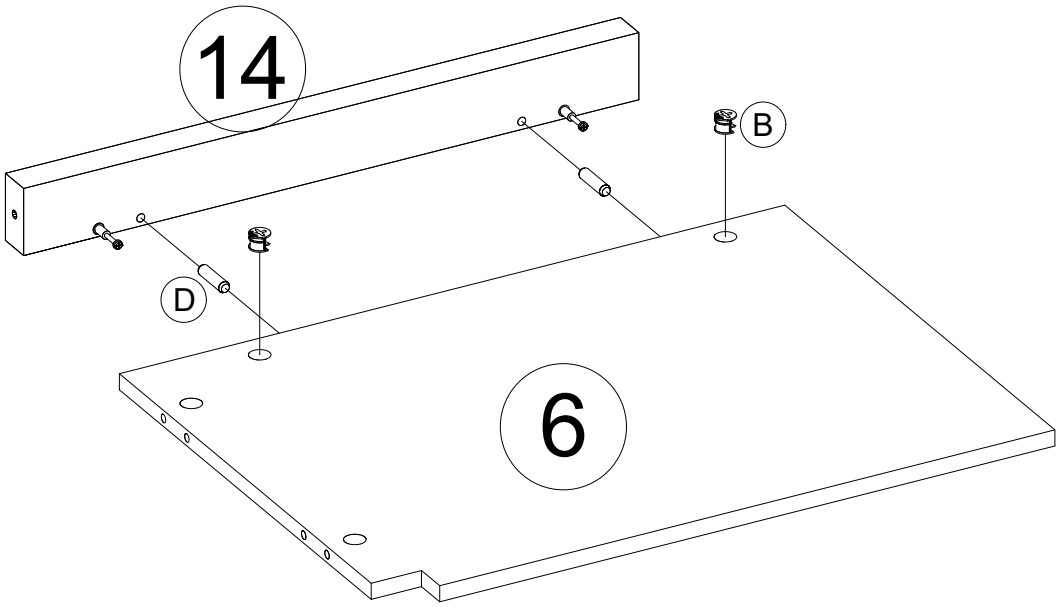

After assembled

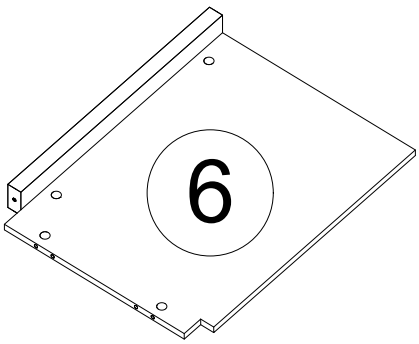

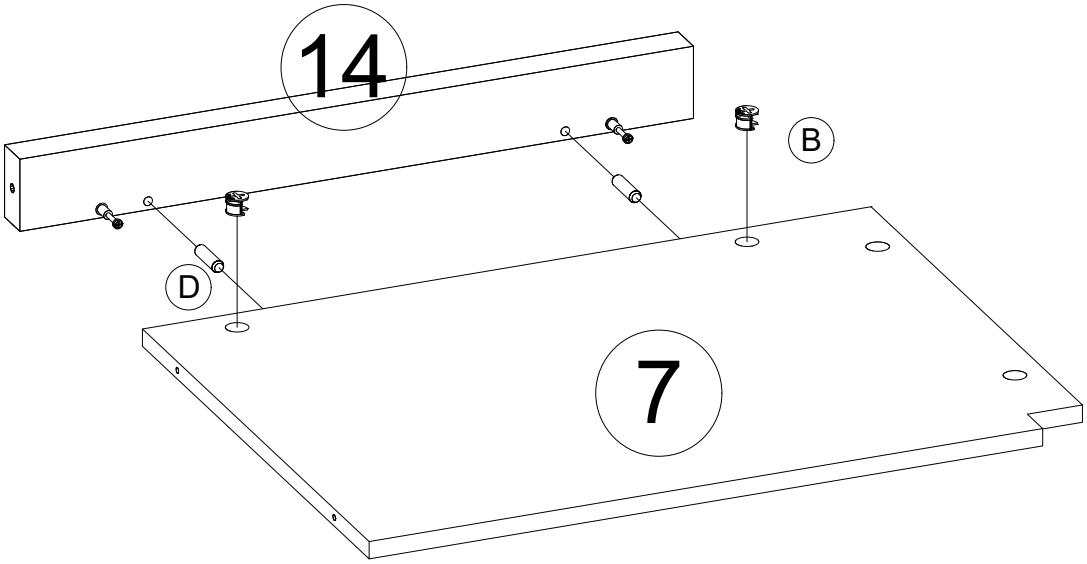

After assembled

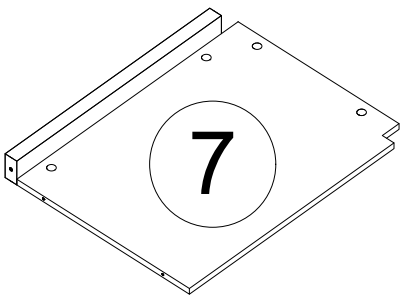

2

Ø15X9.5MM 6X30MM

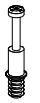

A x 3



B x 3



D x 2

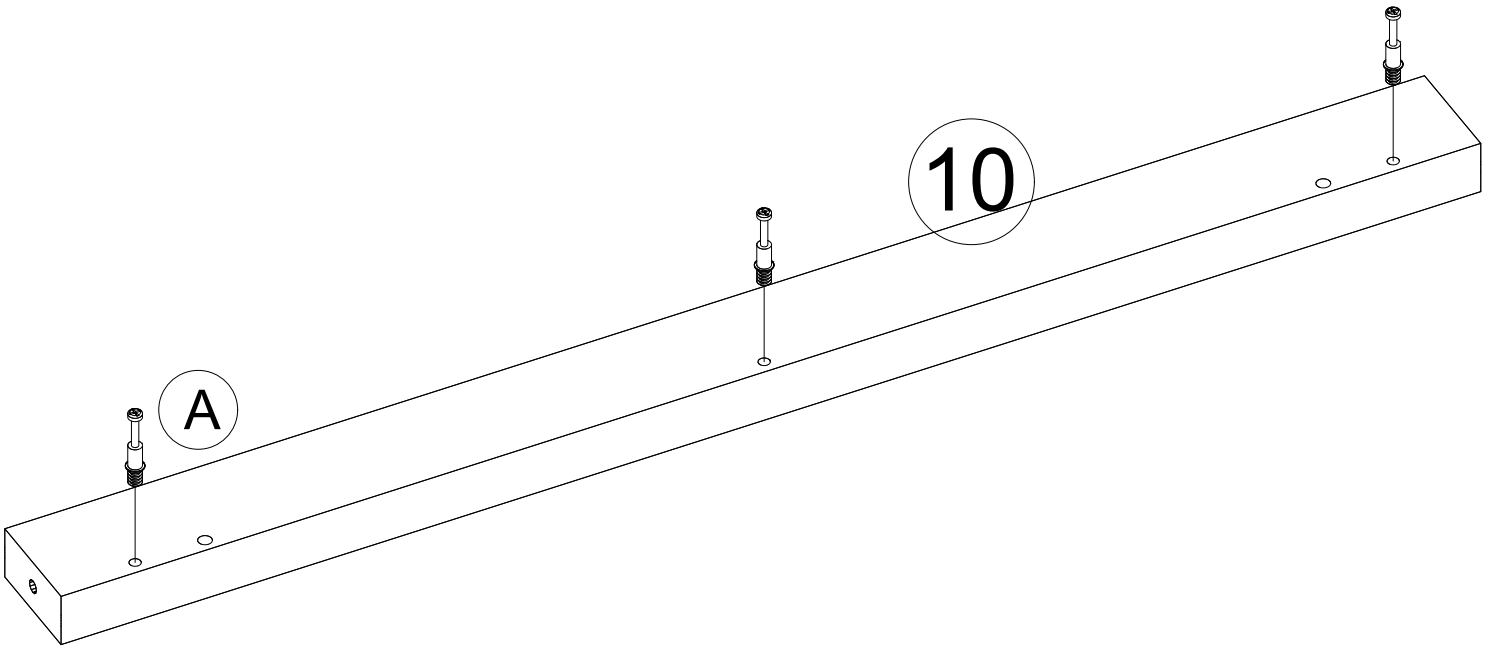

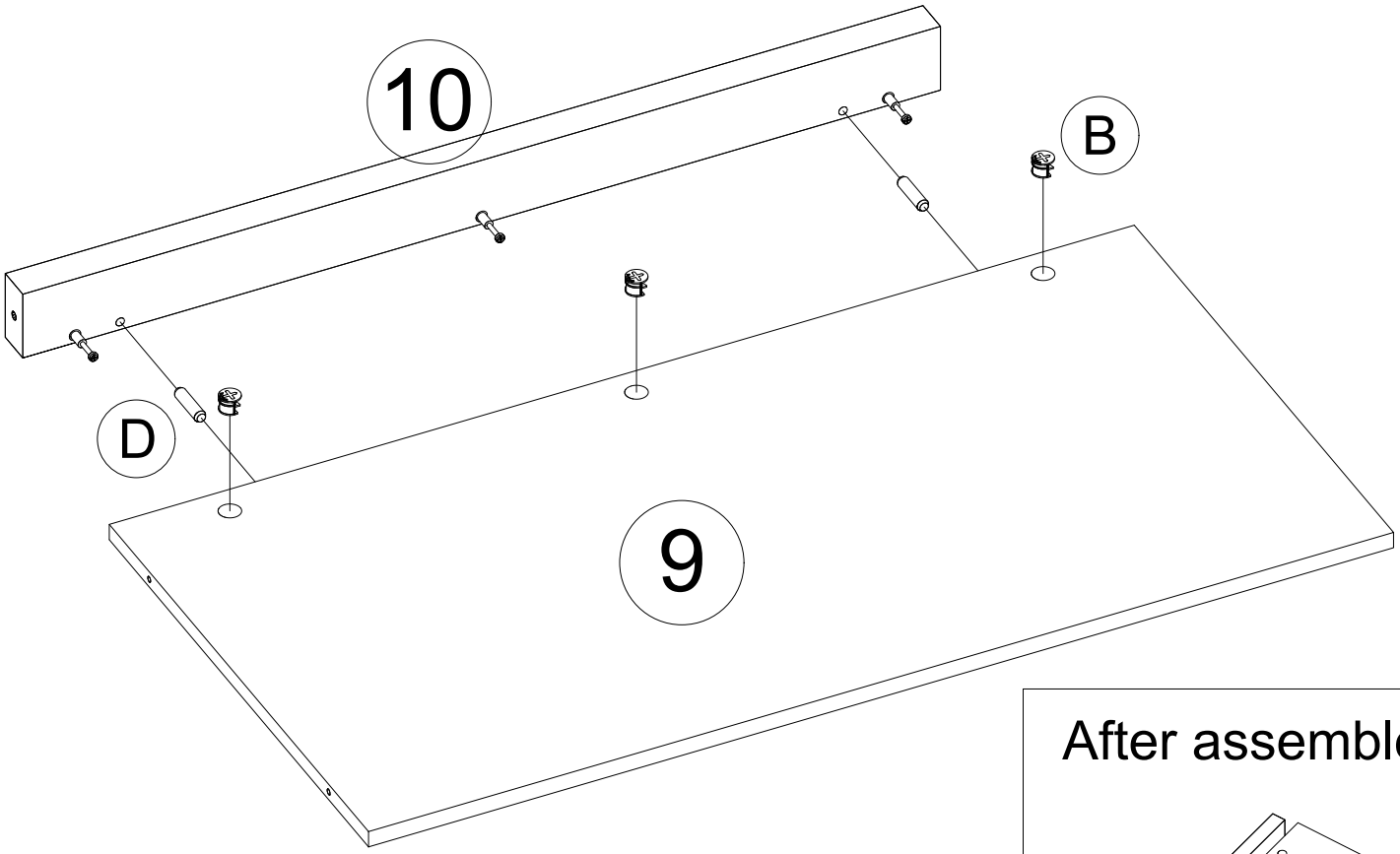

After assembled

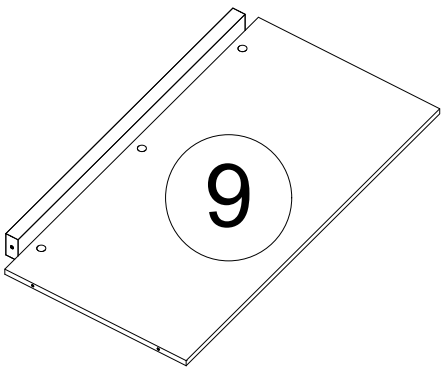

3

D3X16MM

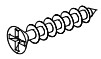

J x 16



F-1 x 4

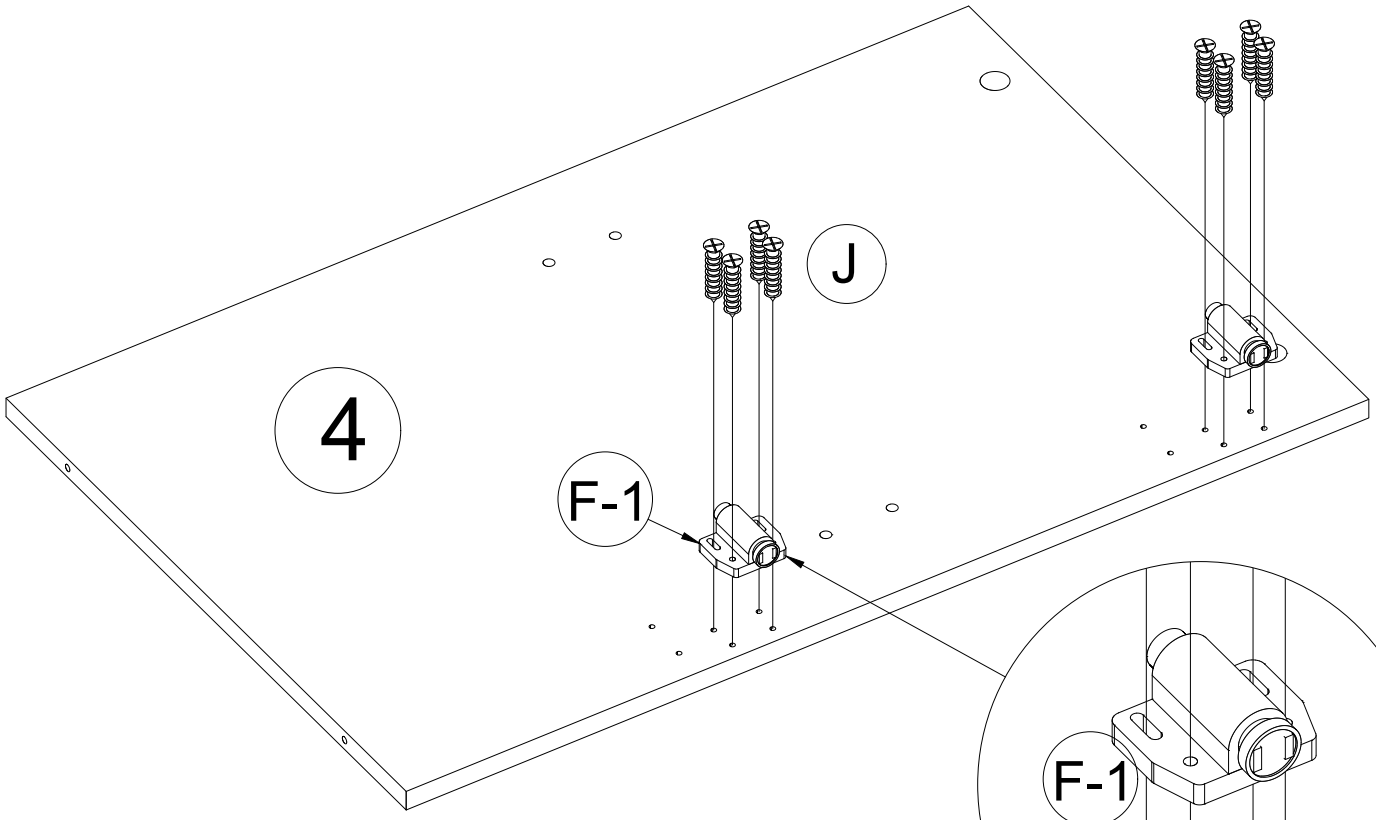

Noted direction

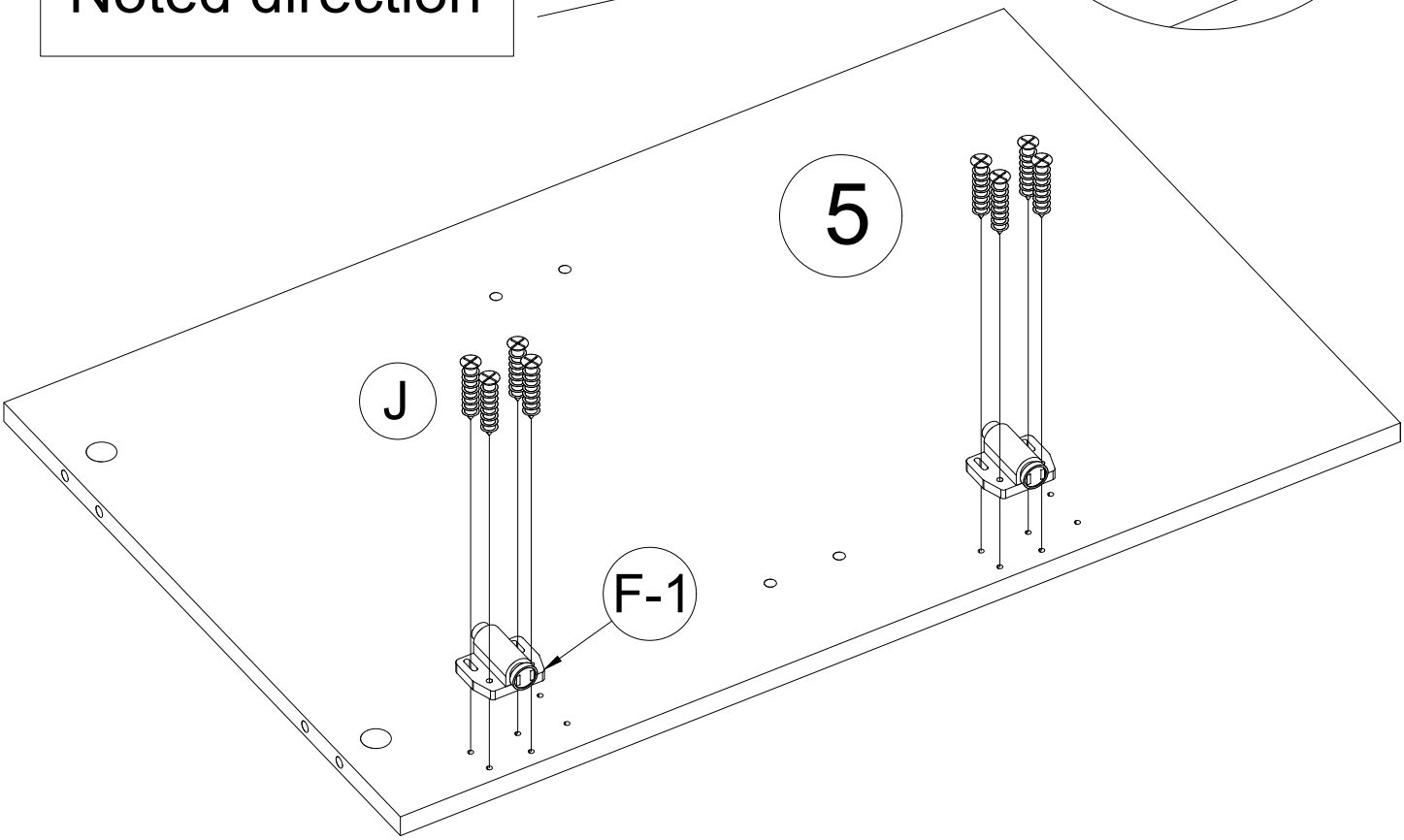

4

D5X40MM



C x 4

Noted direction & assembly hole

5

6X30MM



D x 1

6

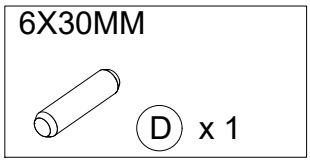
6X30MM
D x 1

D
21
4
Noted alignment here

7

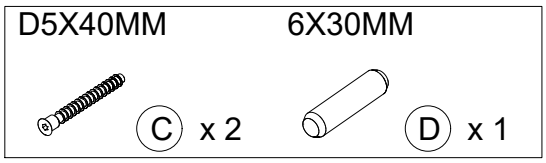
D5X40MM
C x 2
6X30MM
D x 1

D
7
C
5

8

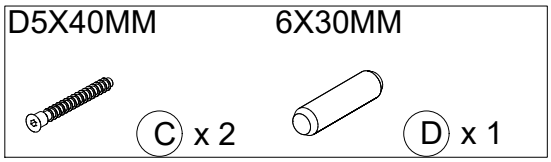

After Assembled

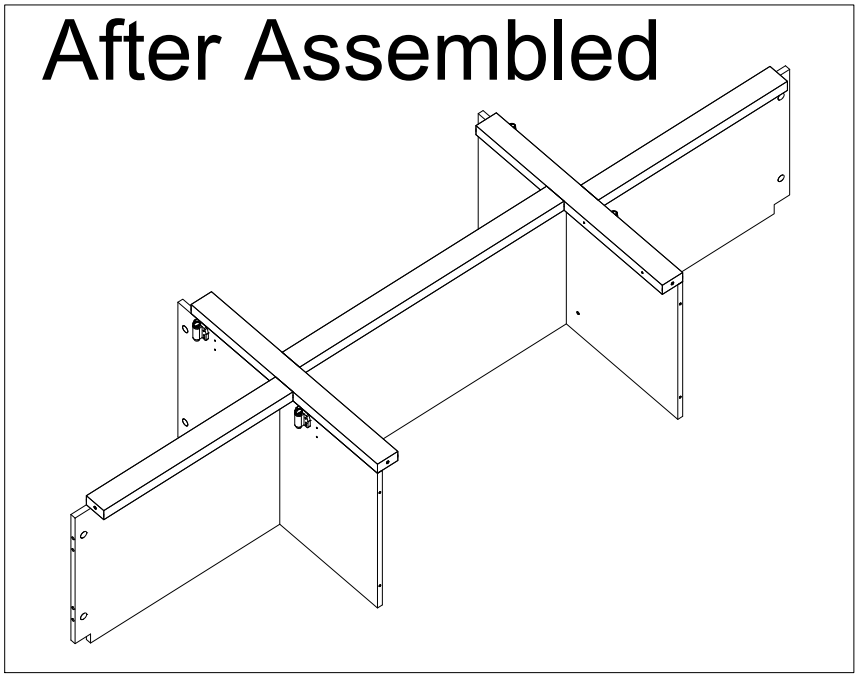

9

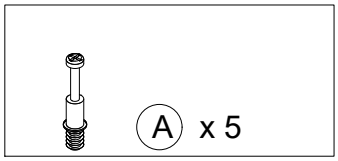

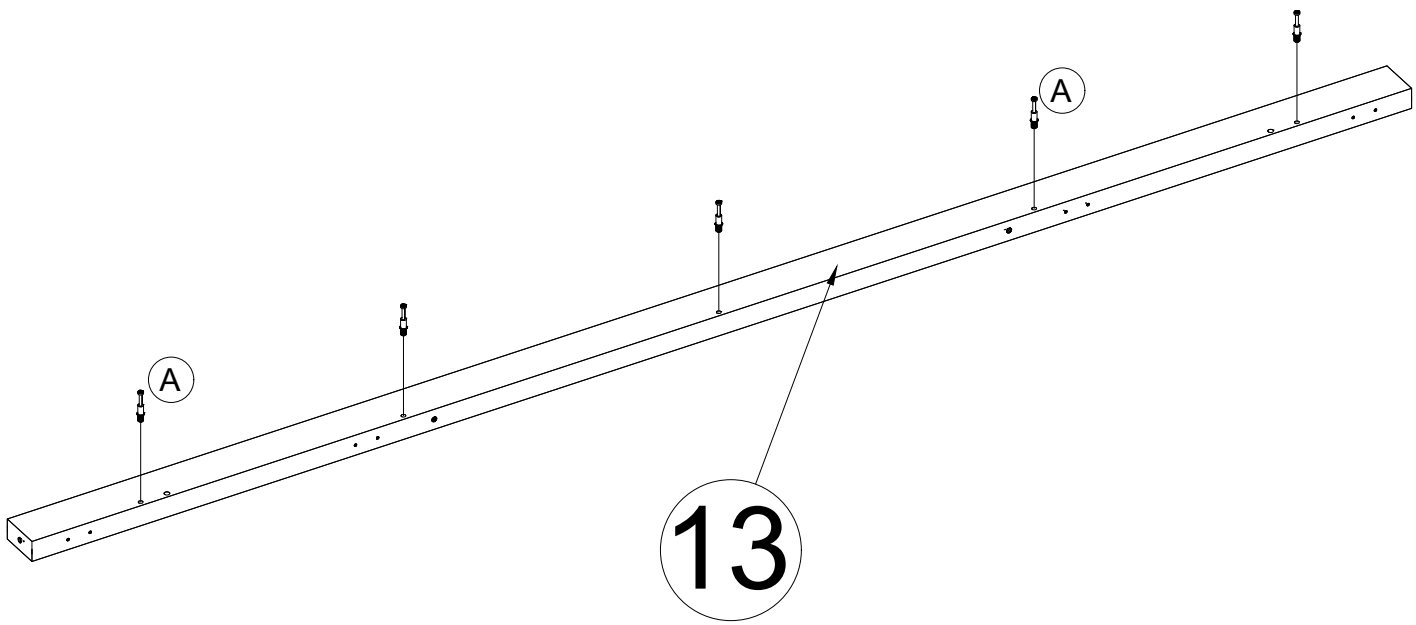

10

D3X16MM

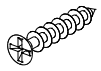

J x 8



F-1 x 2

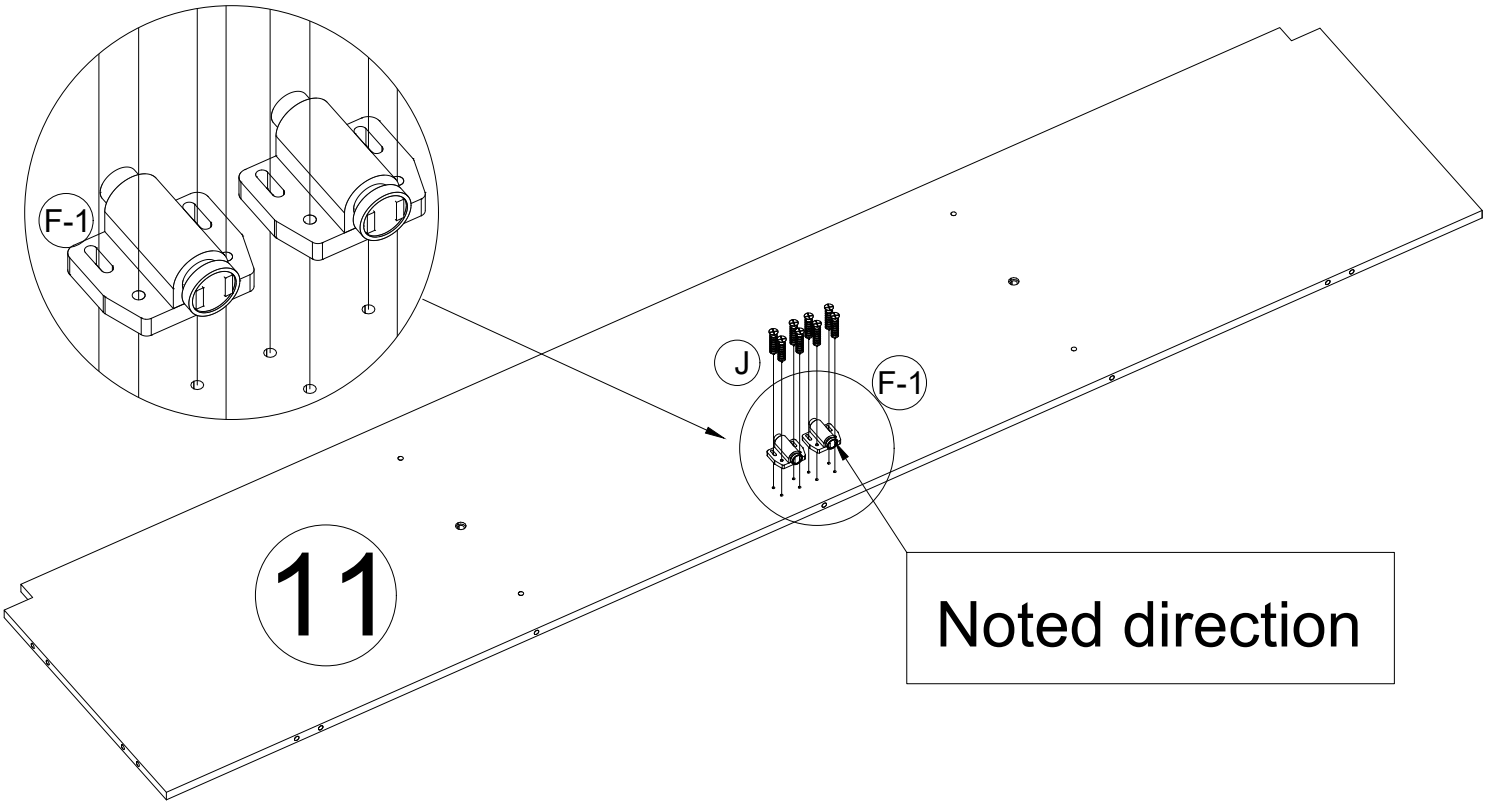

11

Ø15X9.5MM 6X30MM



B x 5

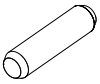

D x 2

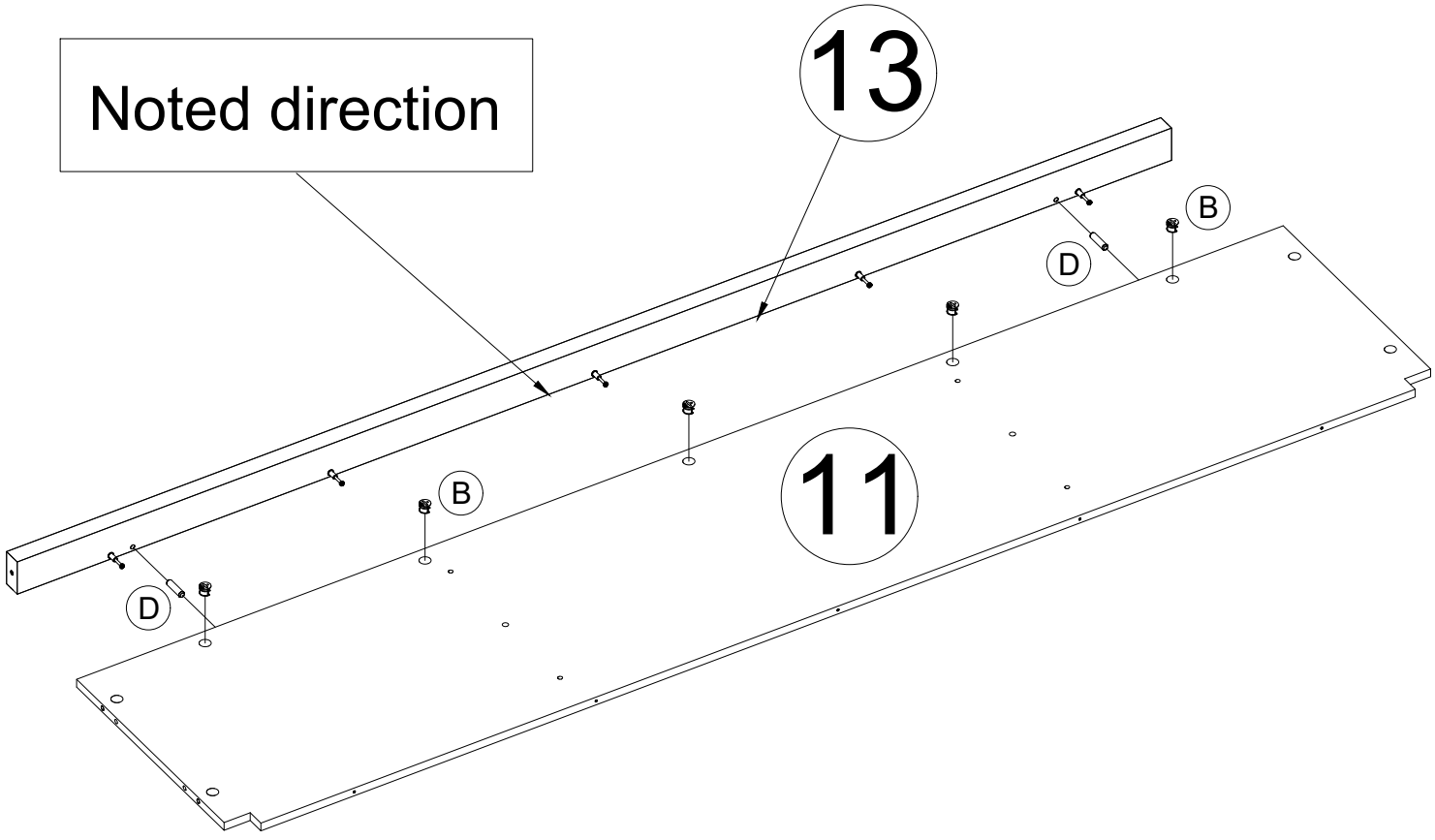

12

M6X20MM



(R) x 2

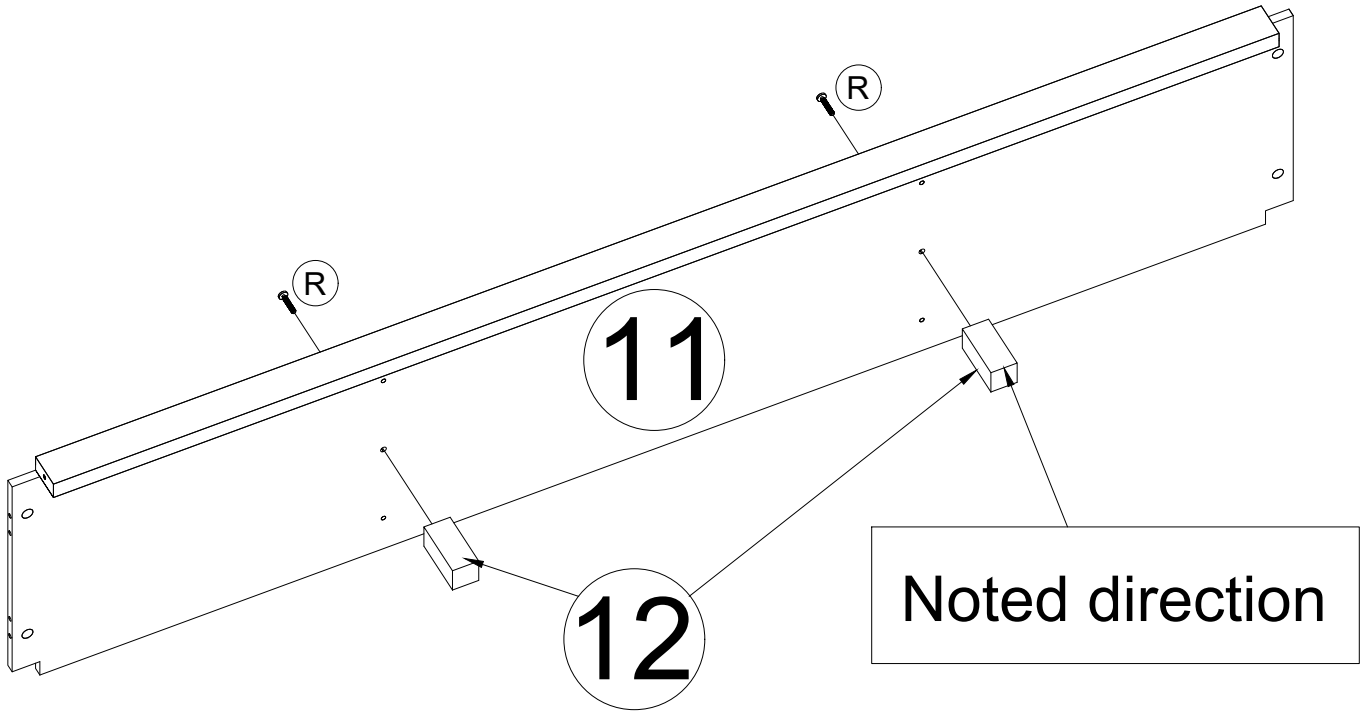

13

D5X40MM



(C) x 4

6X30MM



(D) x 2

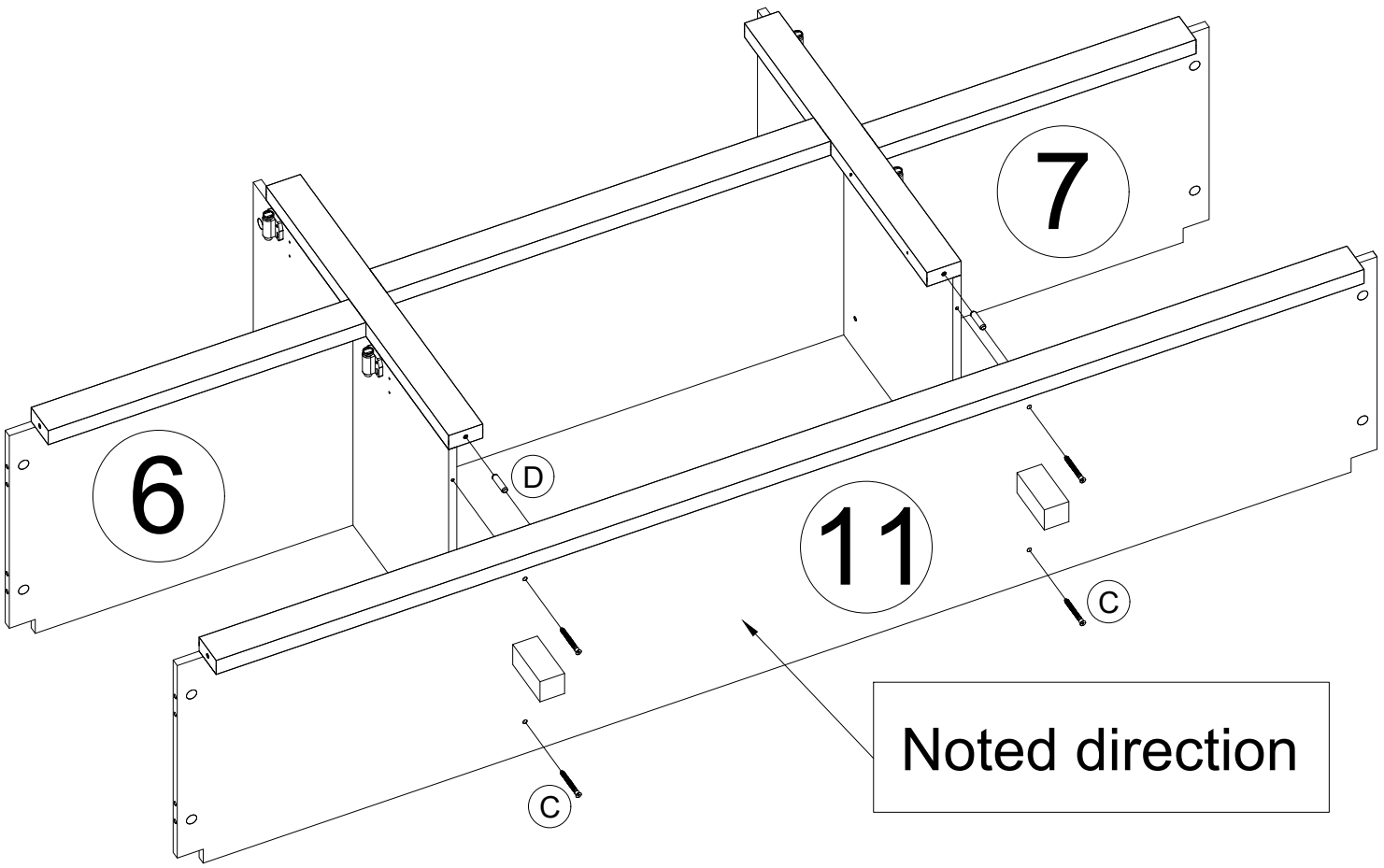

14

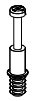

A x 10

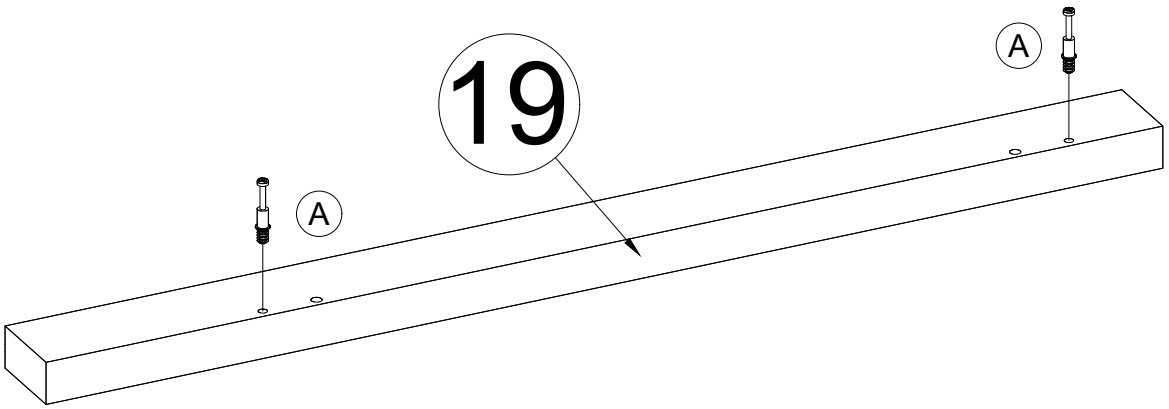

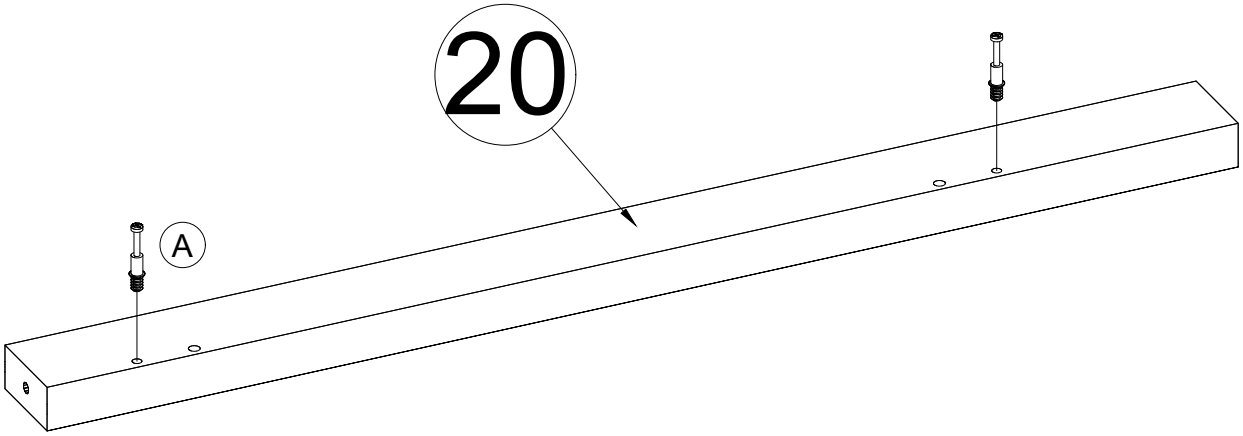

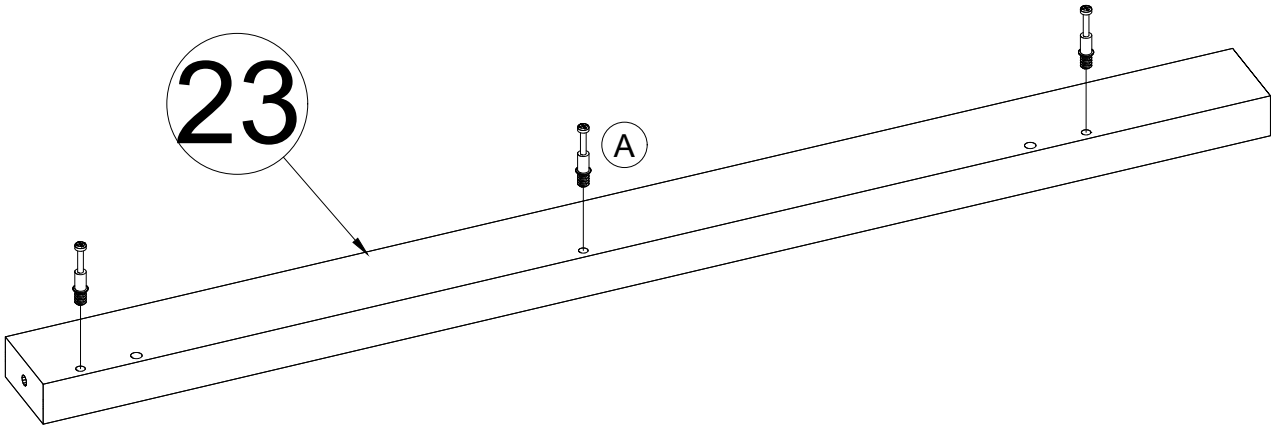

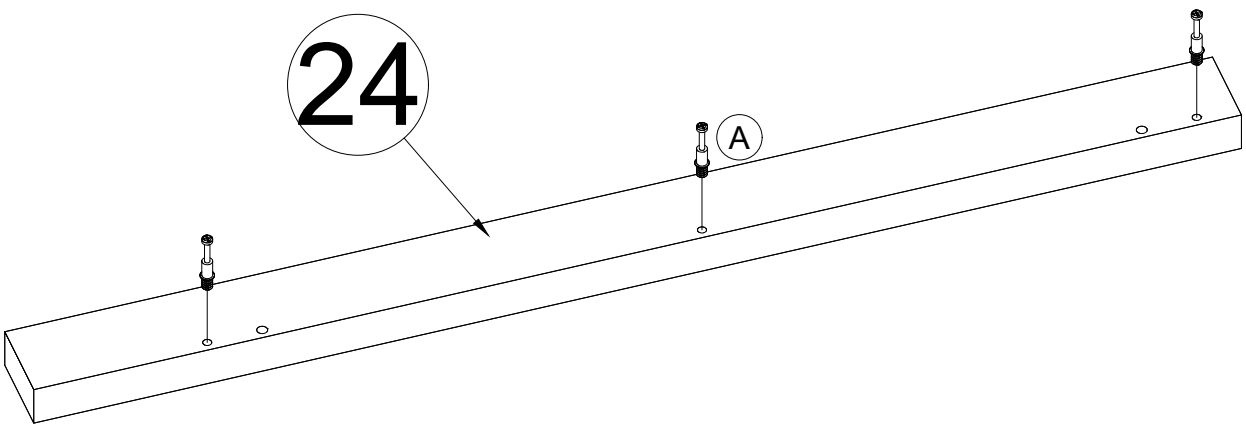

15

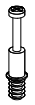

(A) x 8

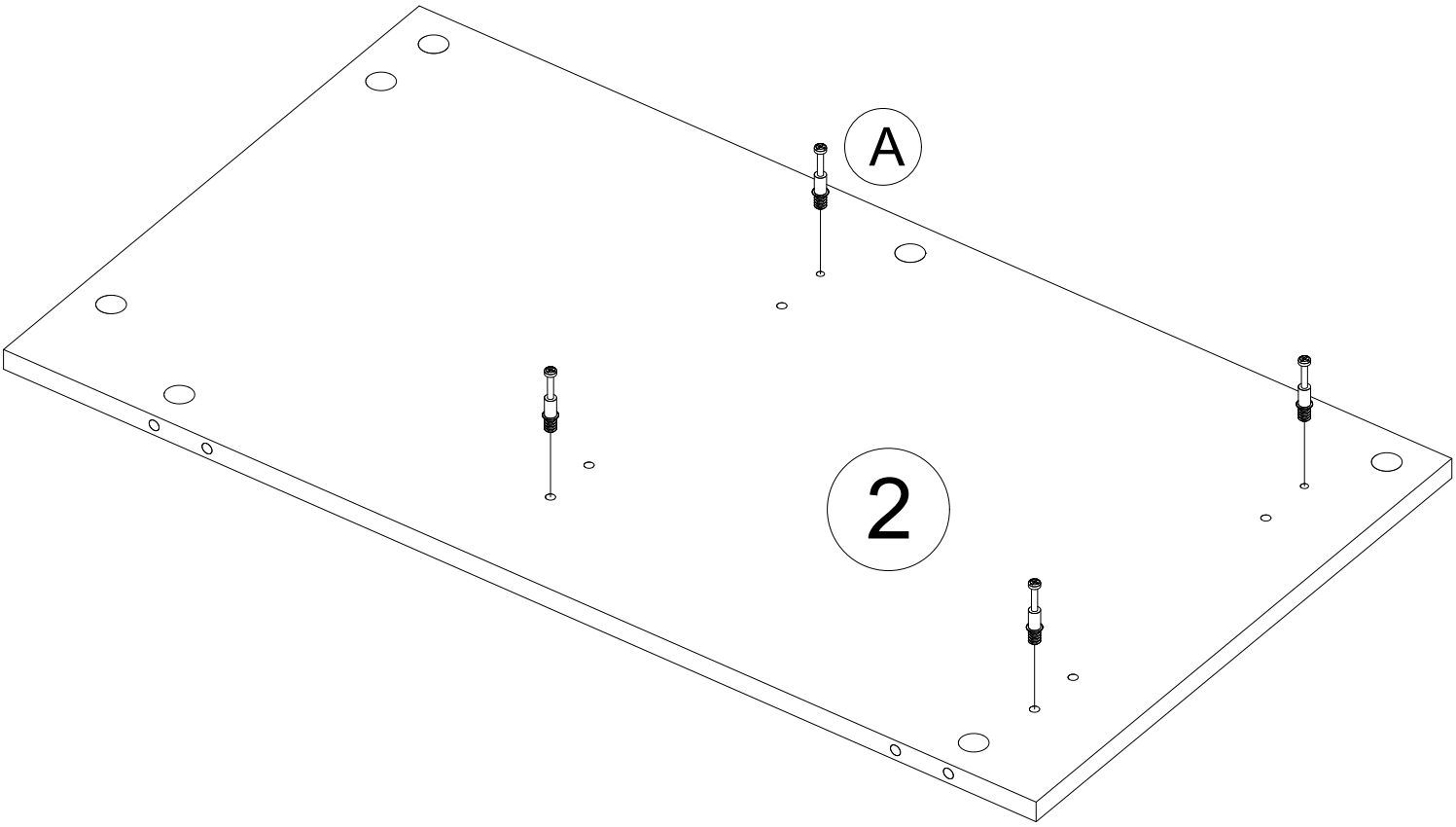

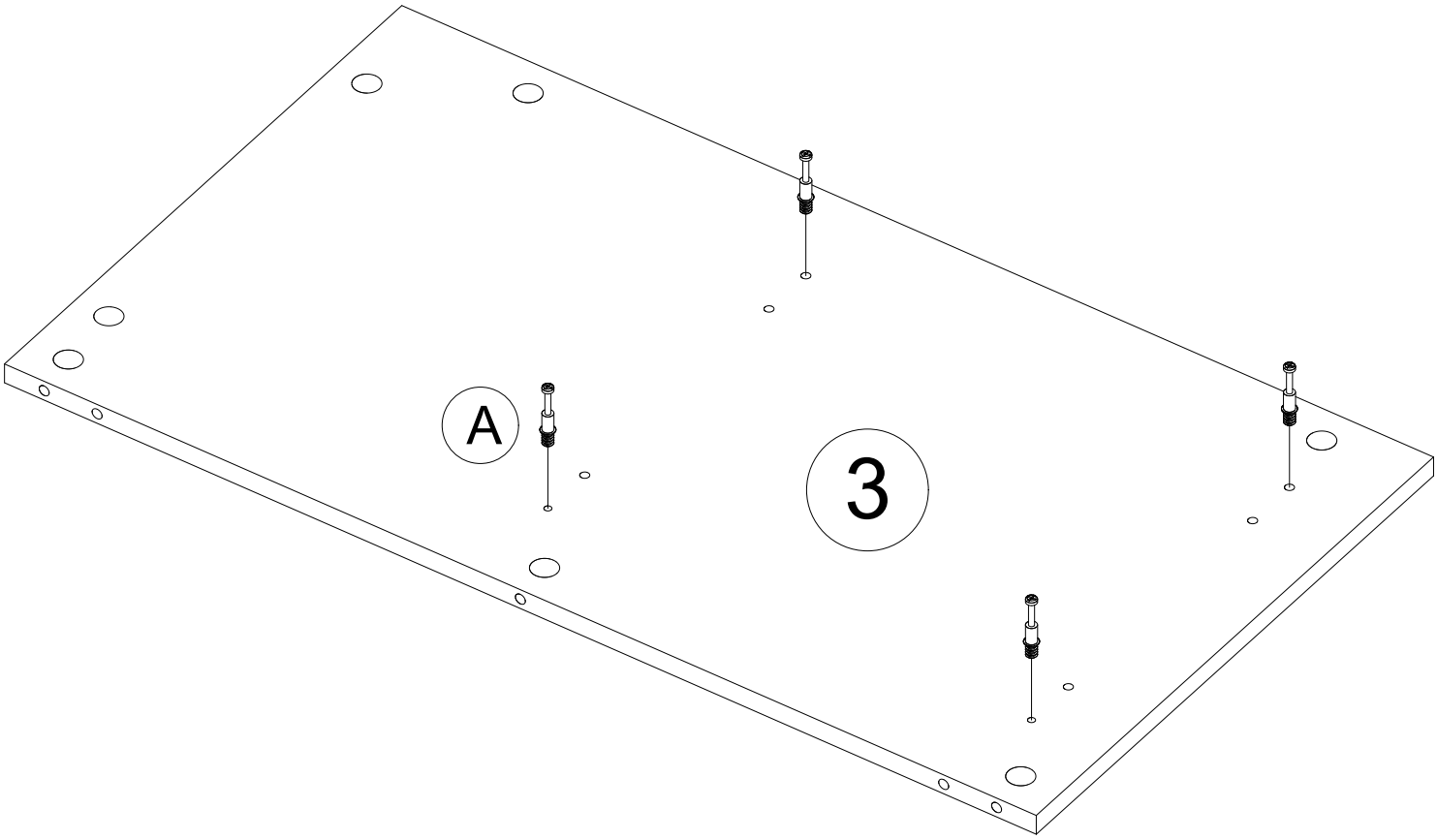

16

Ø15X9.5MM



B x 5

6X30MM



D x 4

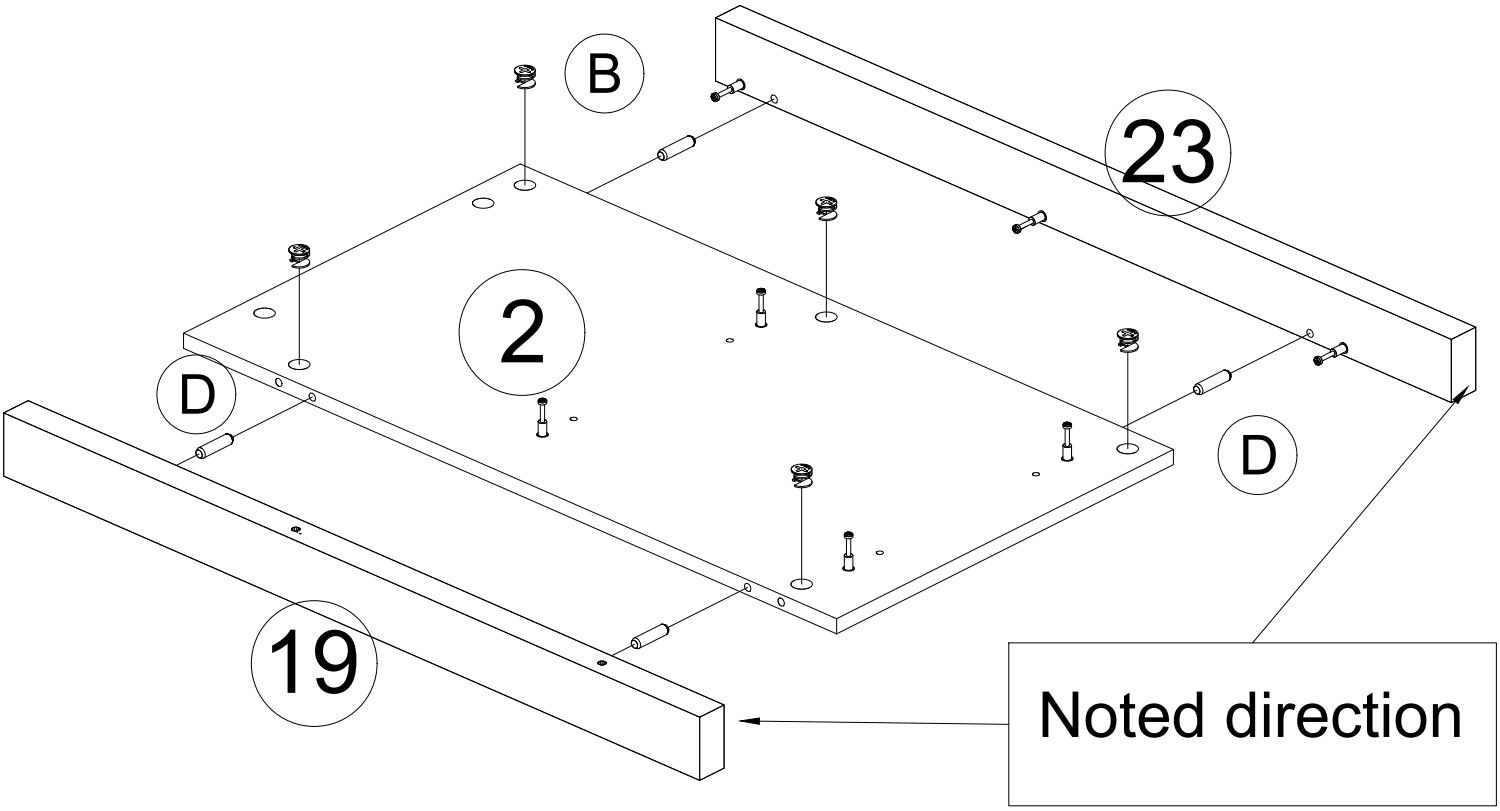

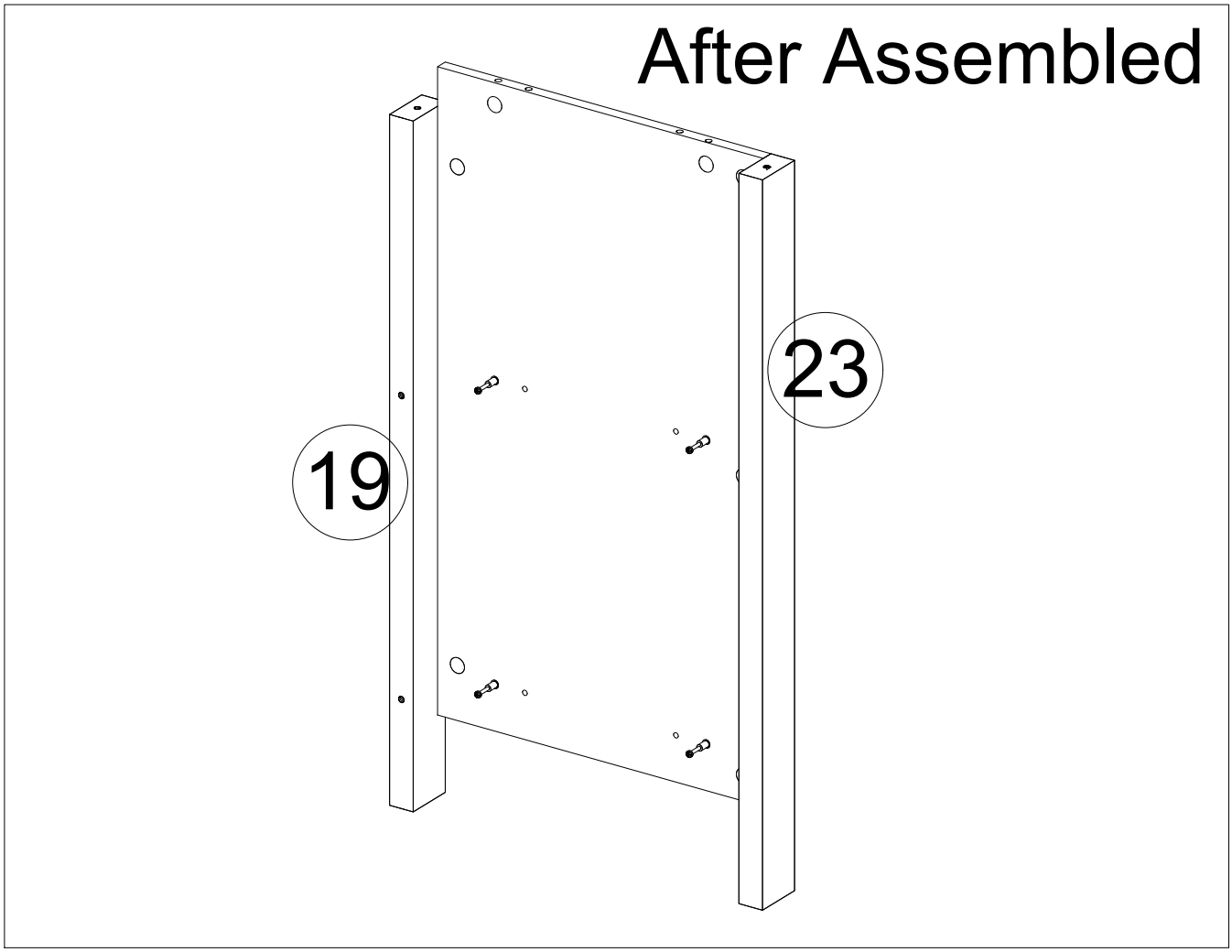

17

Ø15X9.5MM



B x 5

6X30MM



D x 4

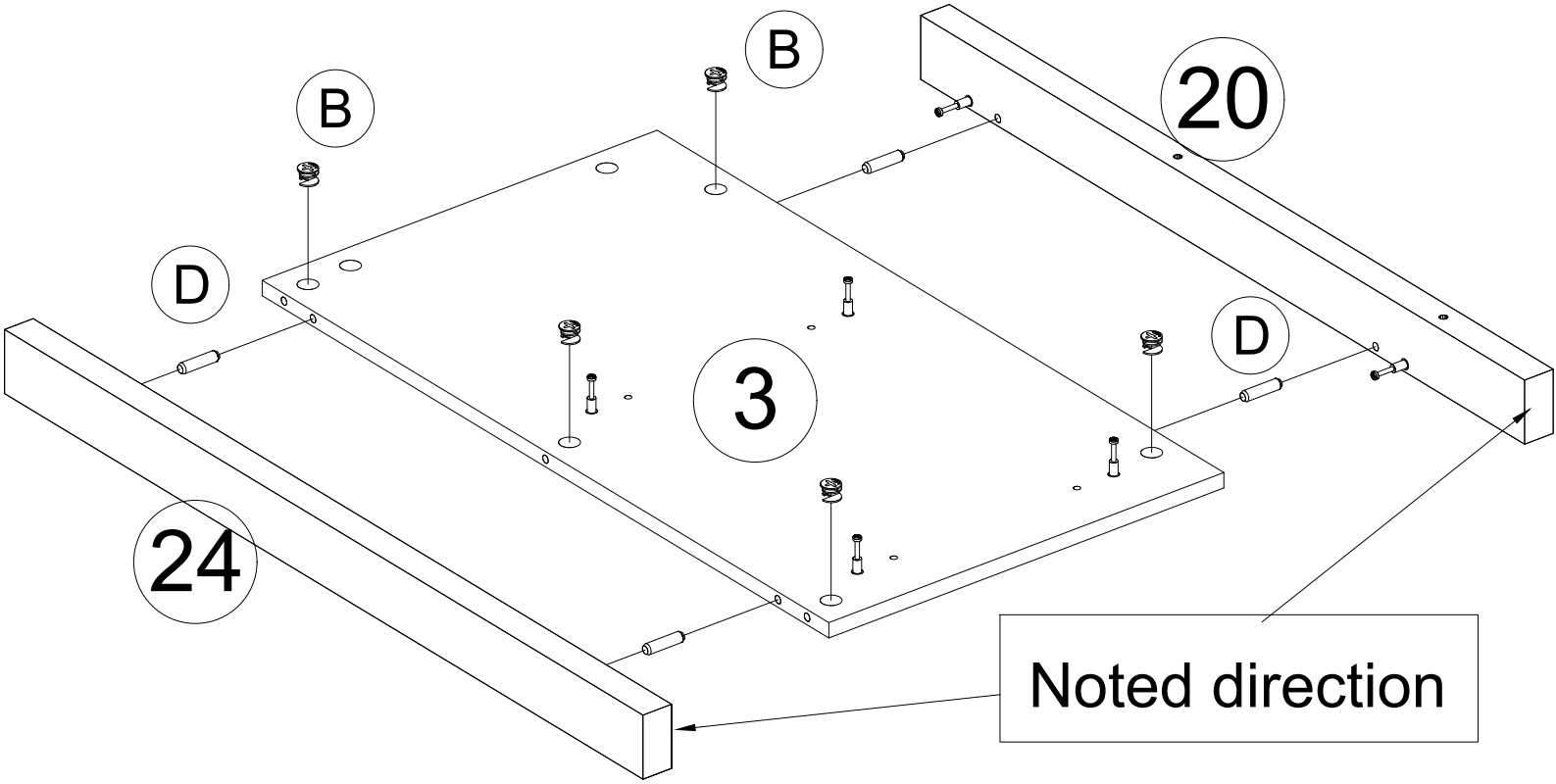

After Assembled

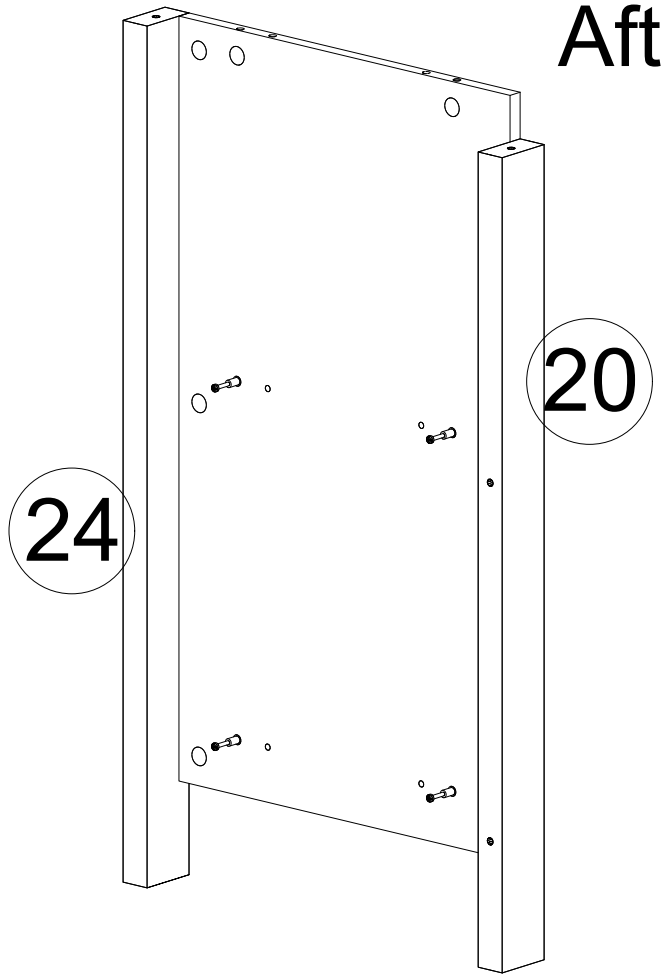

18

Ø15X9.5MM 6X30MM

B x 4 D x 6

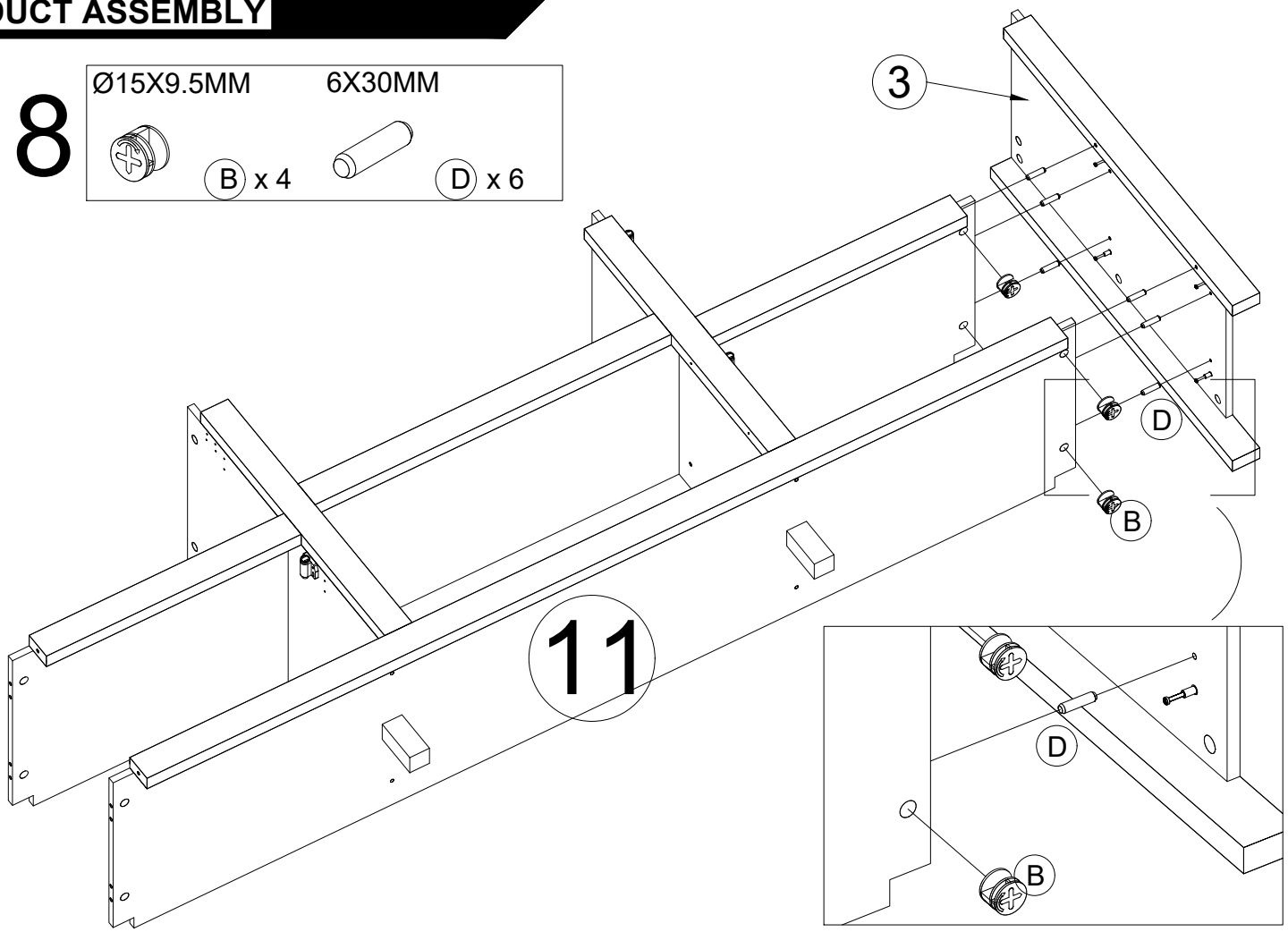

19

Ø15X9.5MM 6X30MM

B x 4 D x 6

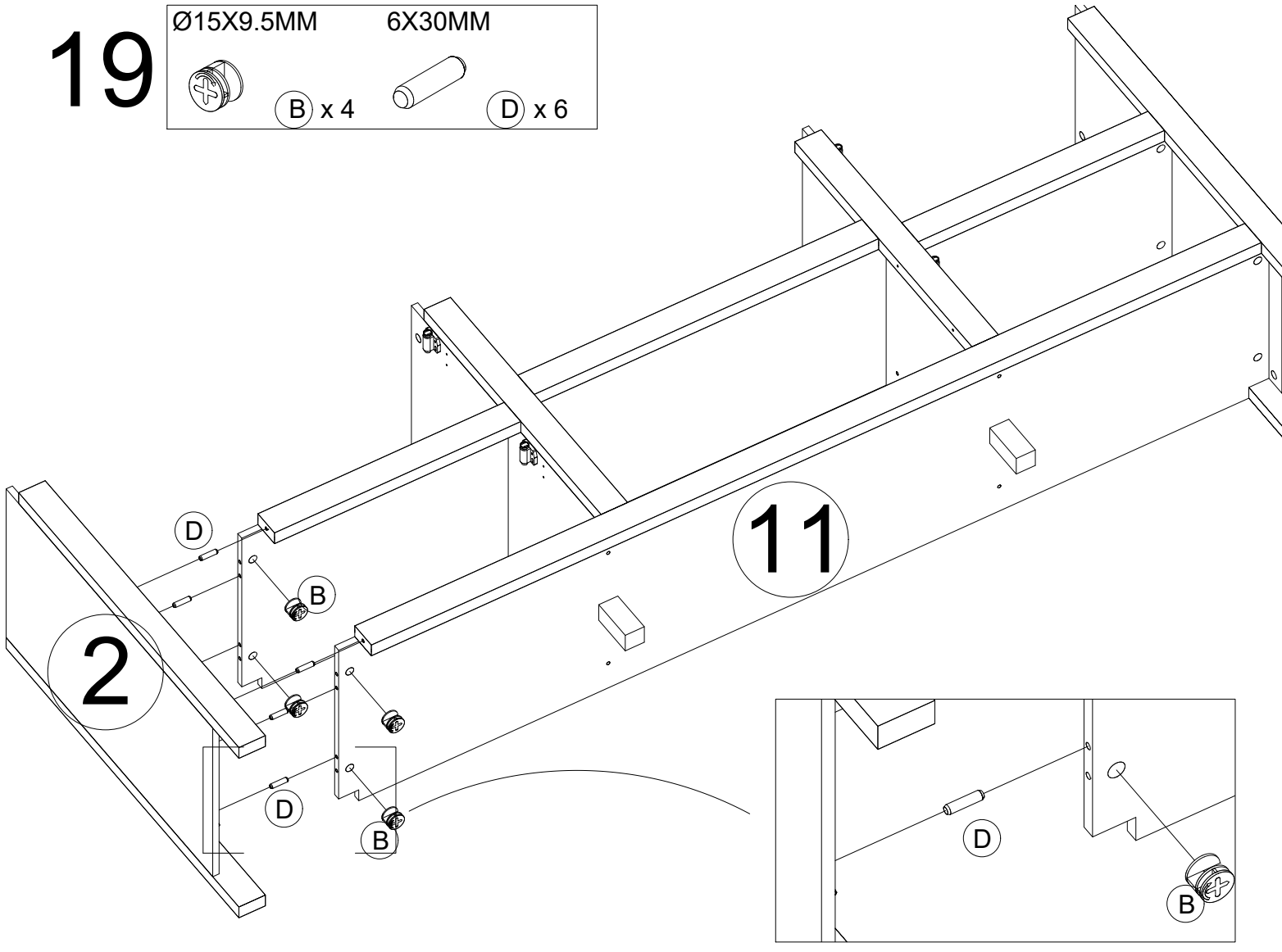

20

Ø15X9.5MM 6X30MM

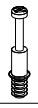

A x 13



B x 5

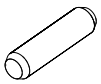

D x 2

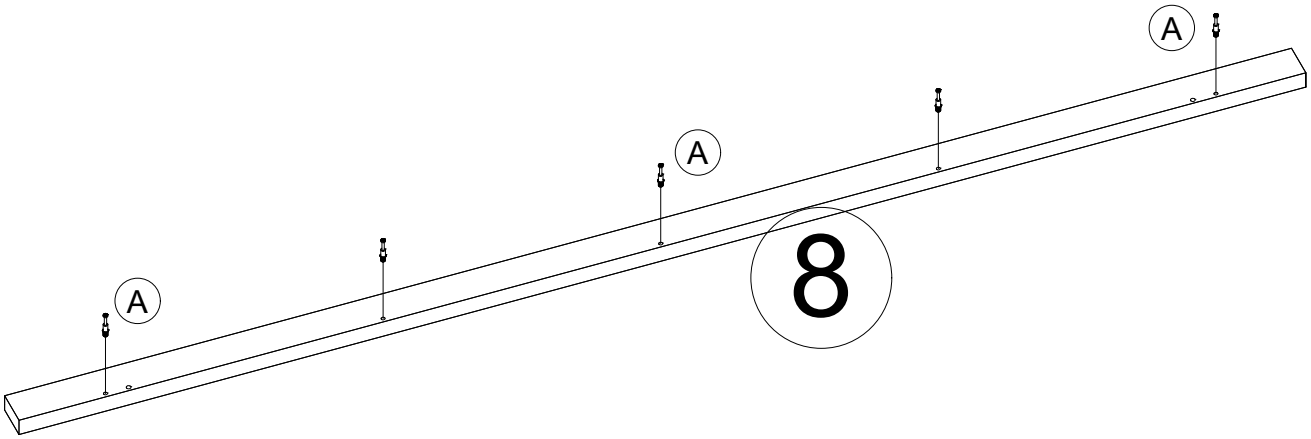

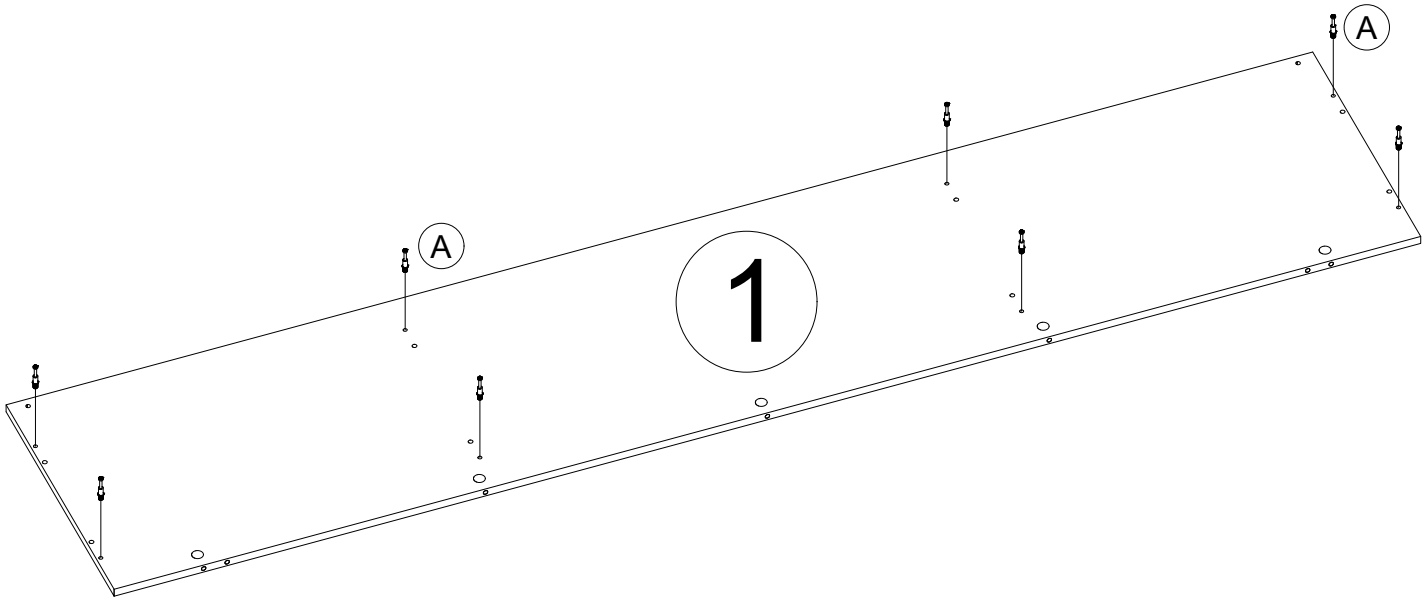

Noted direction

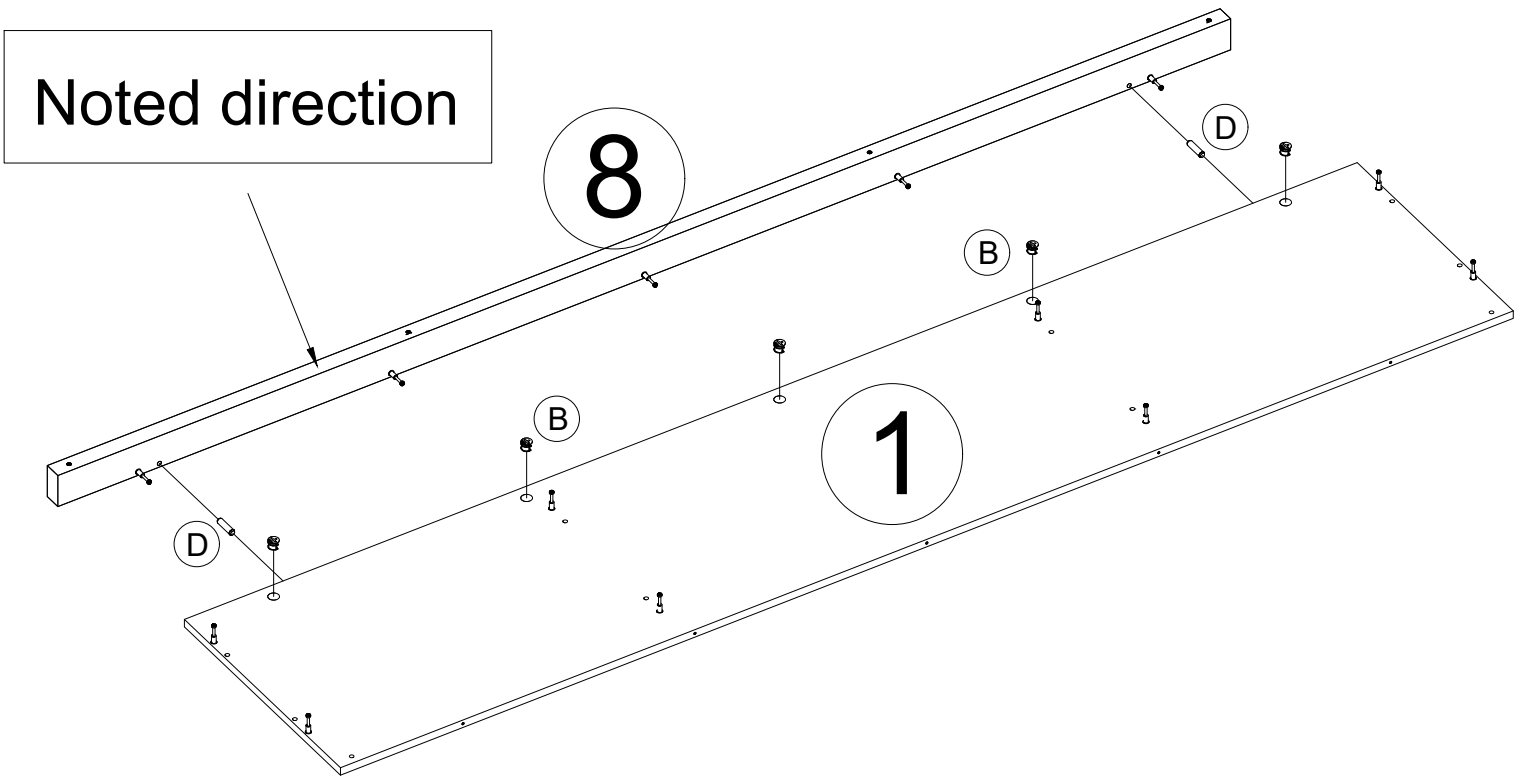

21

Ø15X9.5MM 6X30MM

B x 8 D x 14

Noted direction

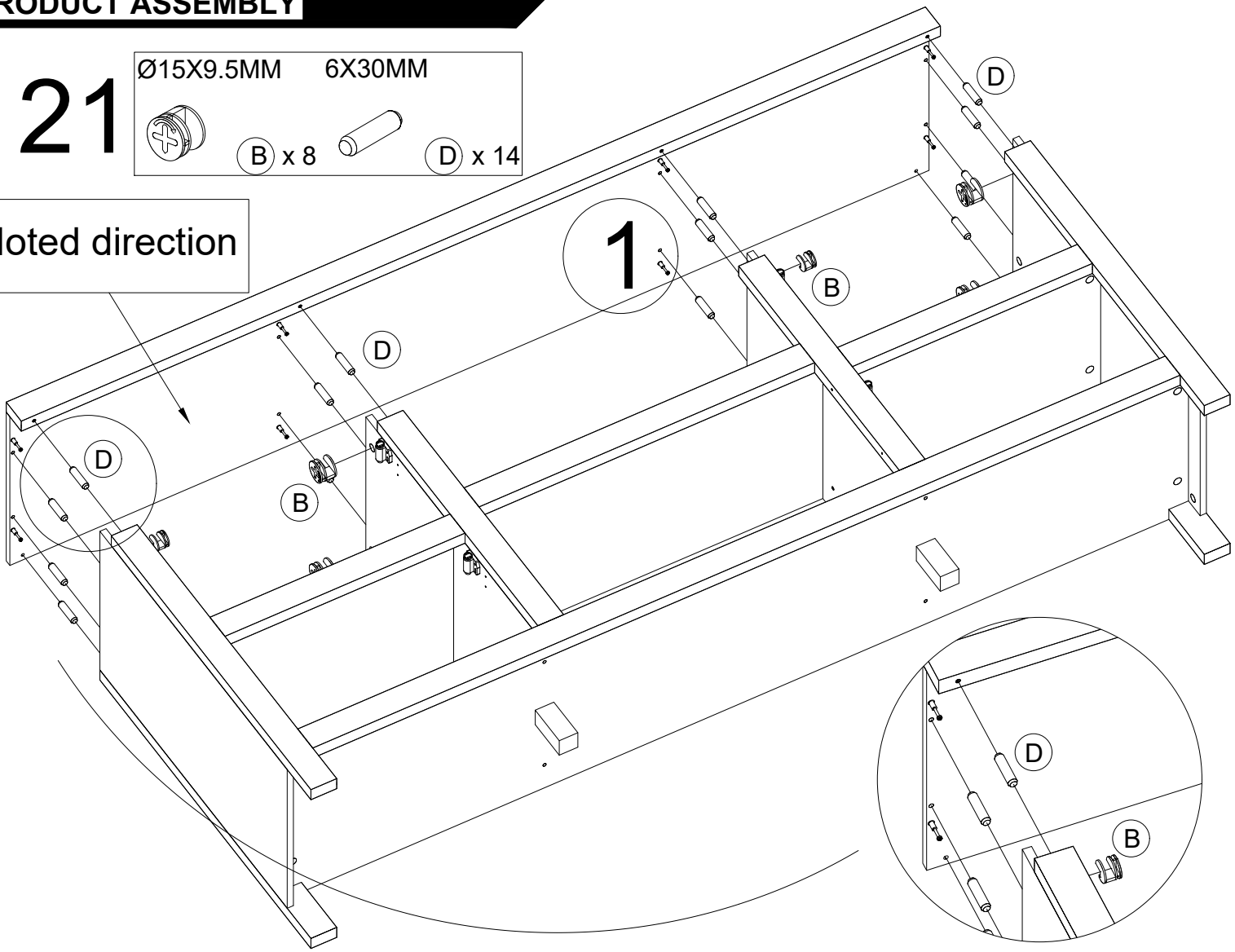

22

Pls careful to stand up the product. Team work is need.

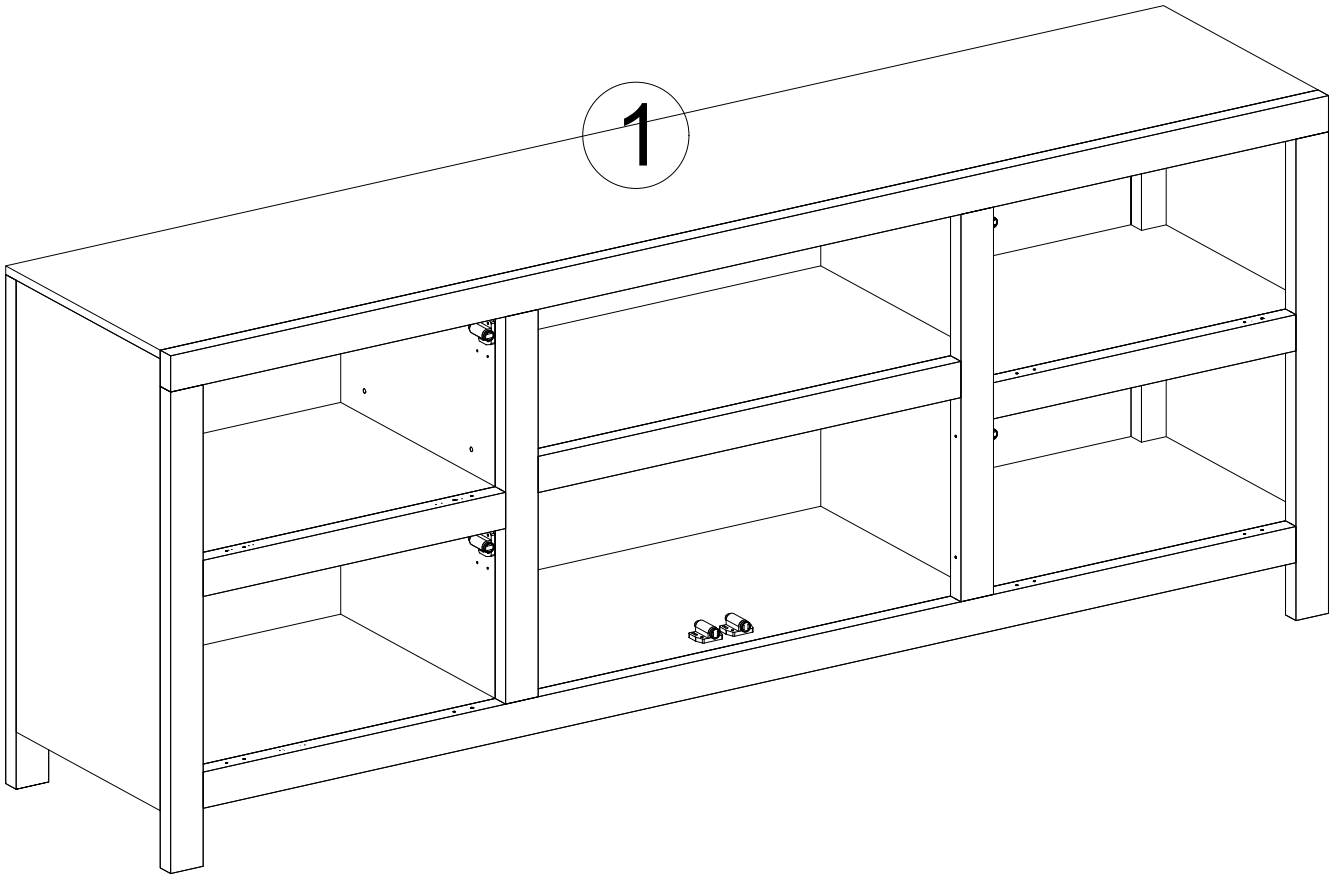

23

M3.5X12MM



H x 32

Noted direction

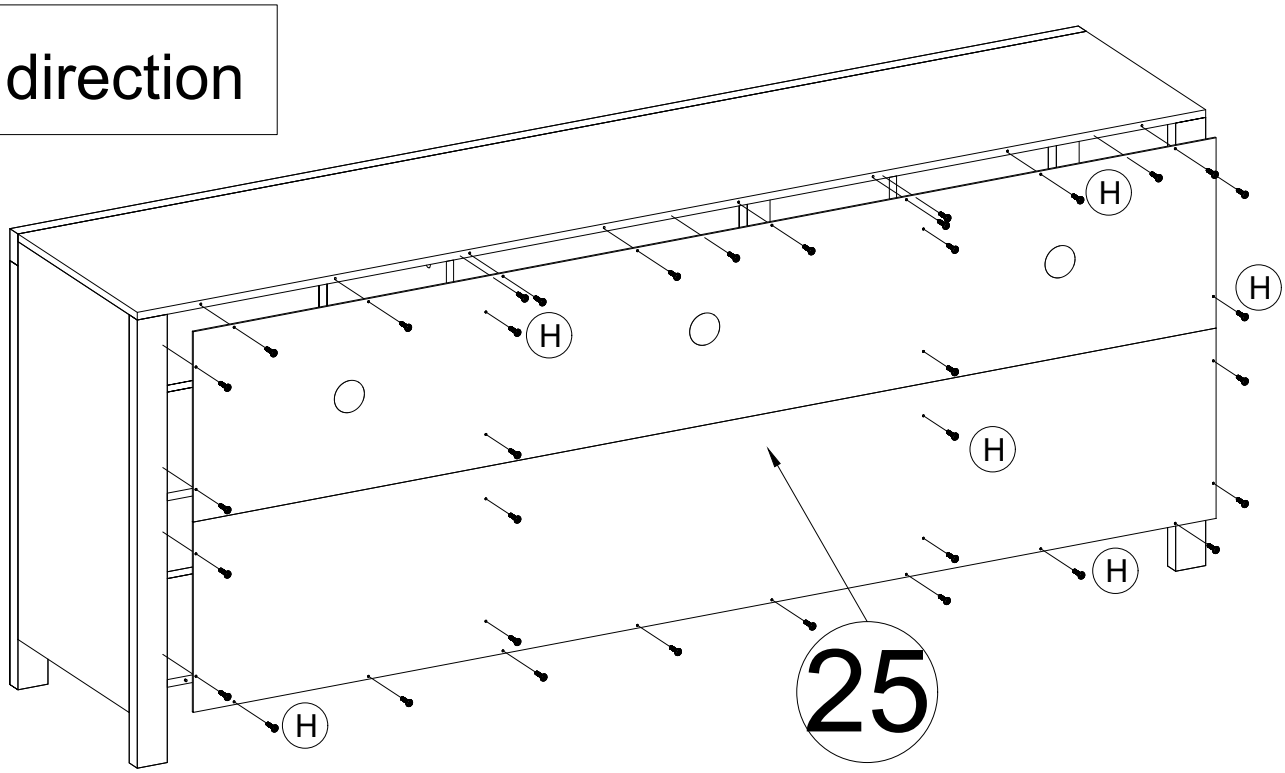

24

D3.5X12MM



E x 20



F-2 x 4



M x 8



Q x 4

M4X15MM



S x 4

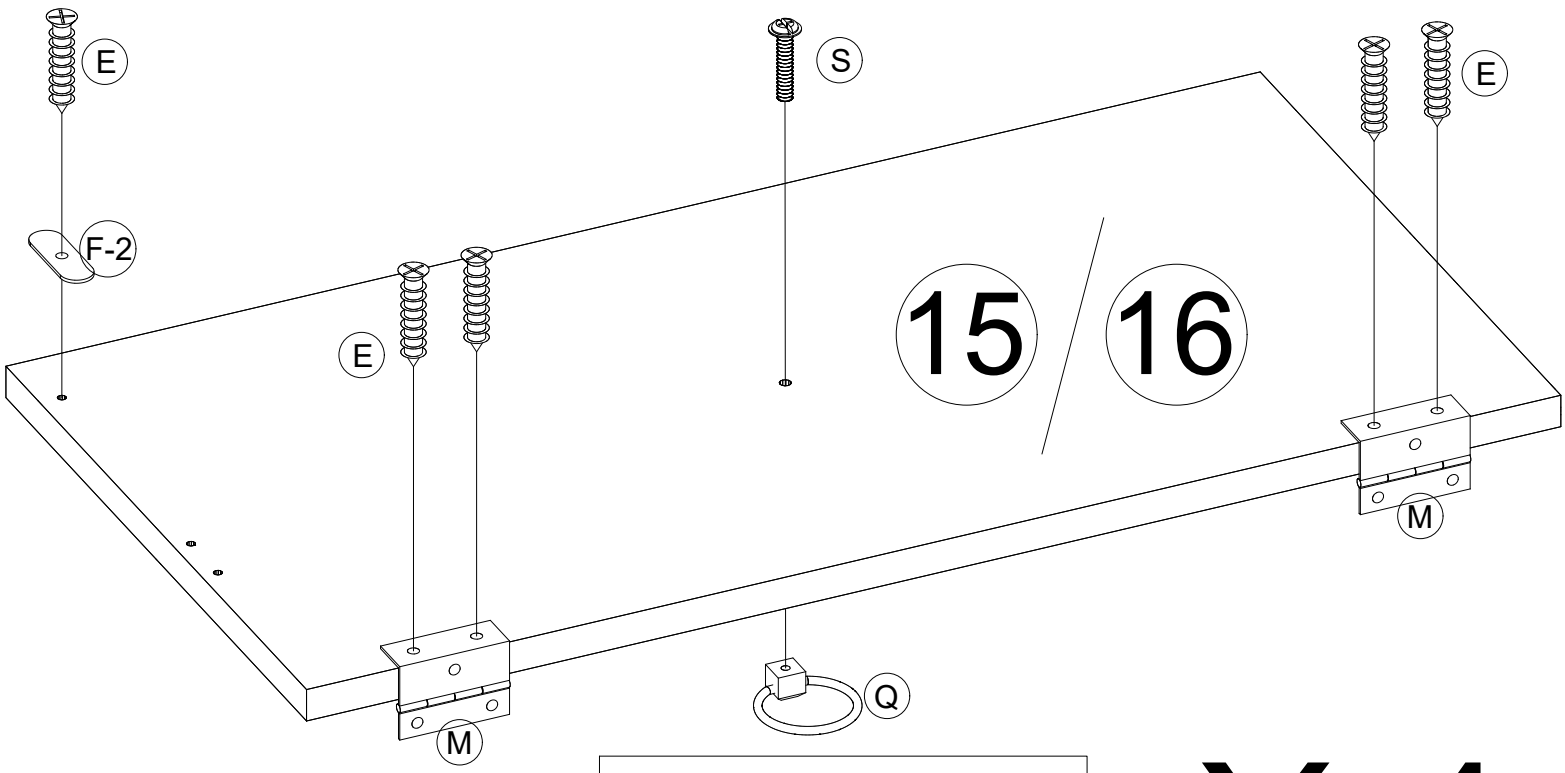

Noted direction

X 4

25

D3.5X12MM

E x 10

F-2 x 2

M x 4

M4X15MM

Q x 2

S x 2

Noted direction

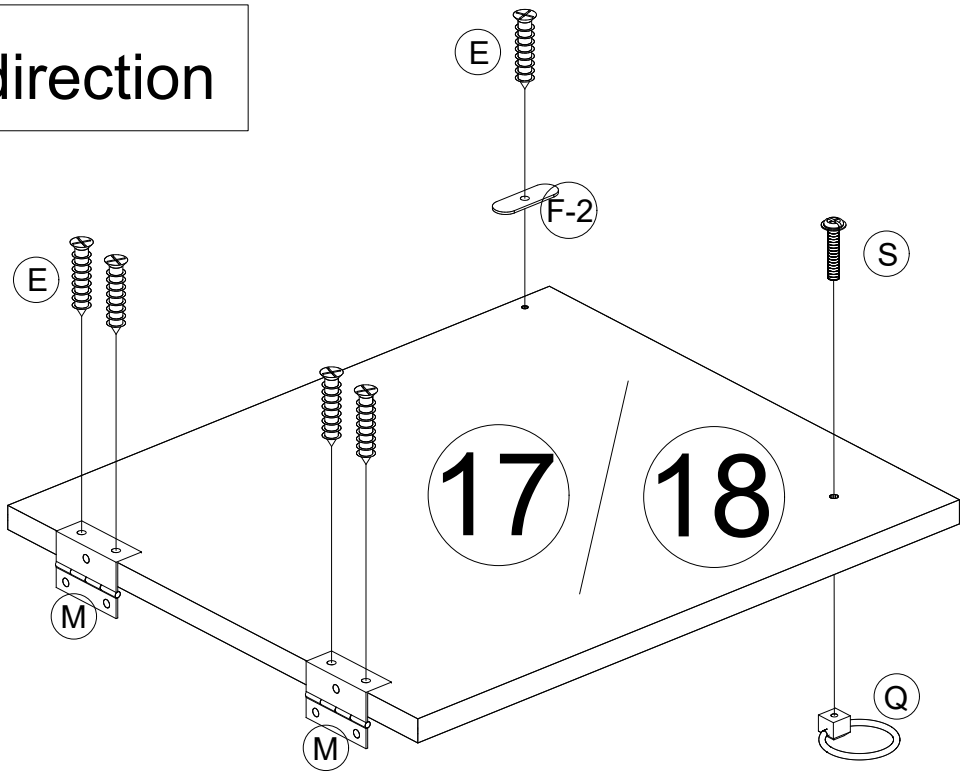

x 2

26

D3.5X12MM

E x 8

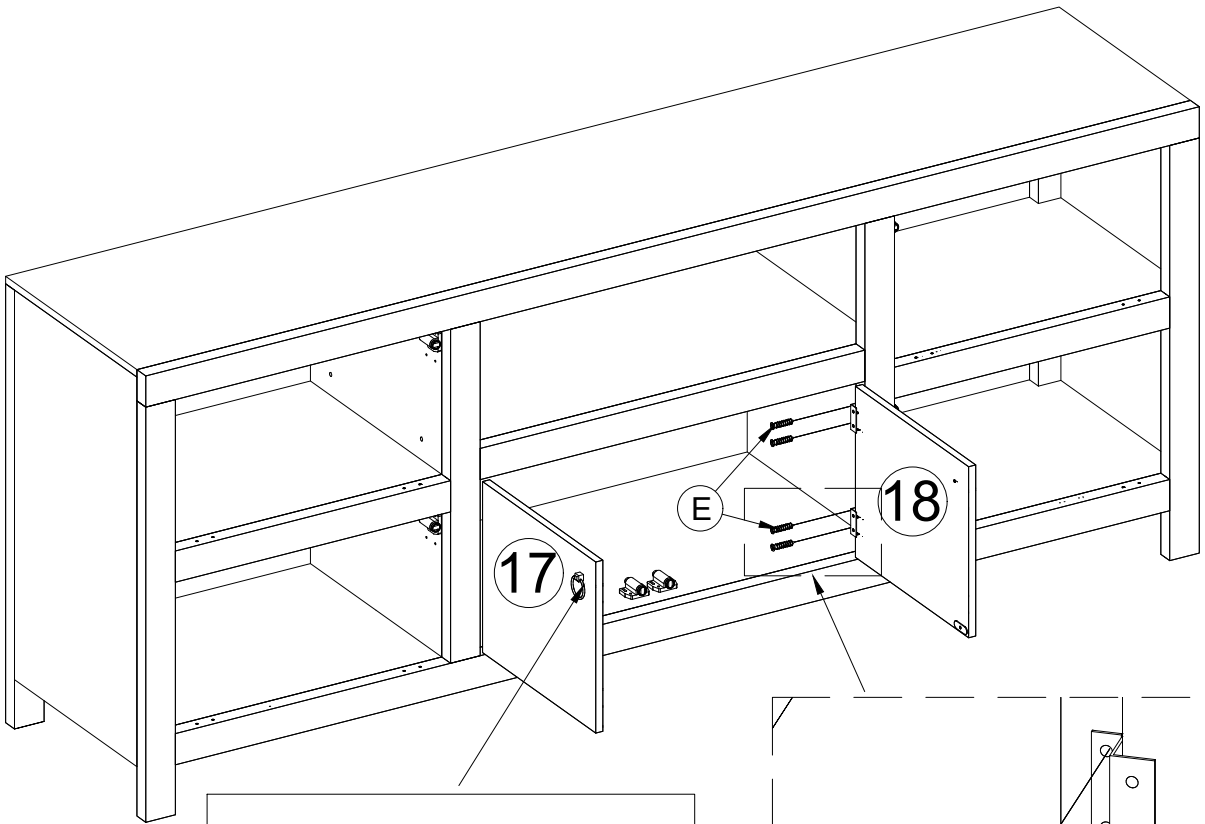

Noted direction

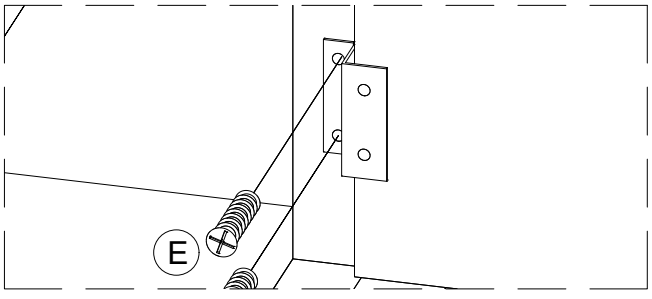

25

D3.5X12MM

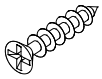

E x 32



N-1 x 2



N-2 x 2

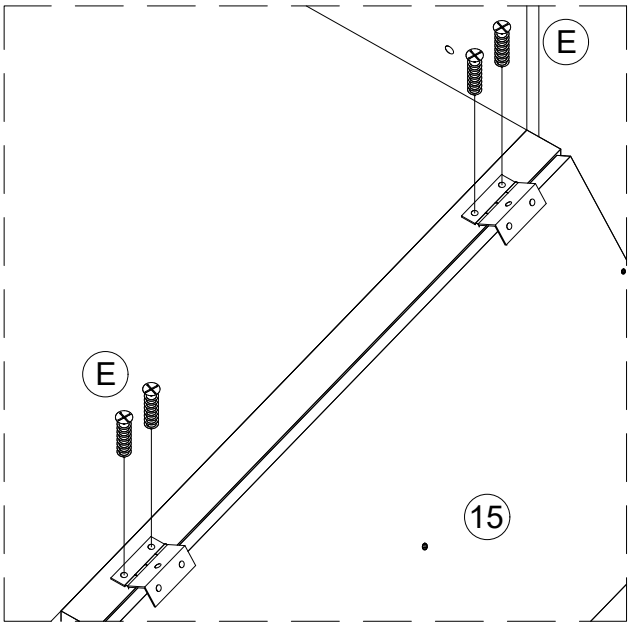

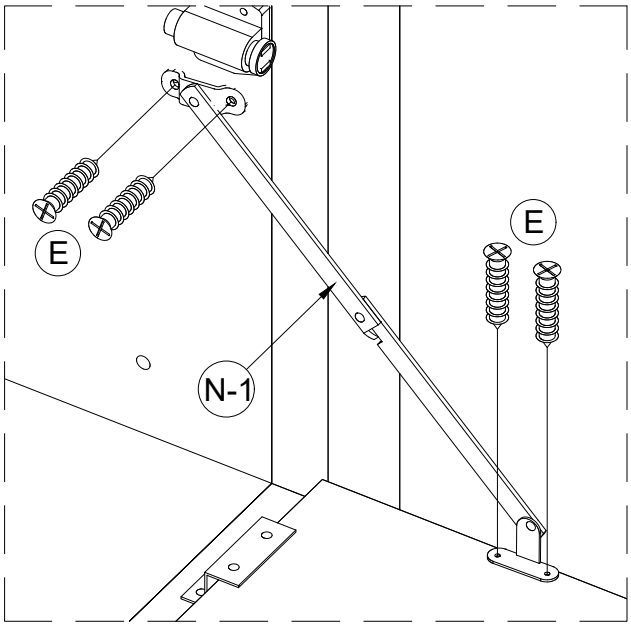

Noted direction of #N-1，#N-2

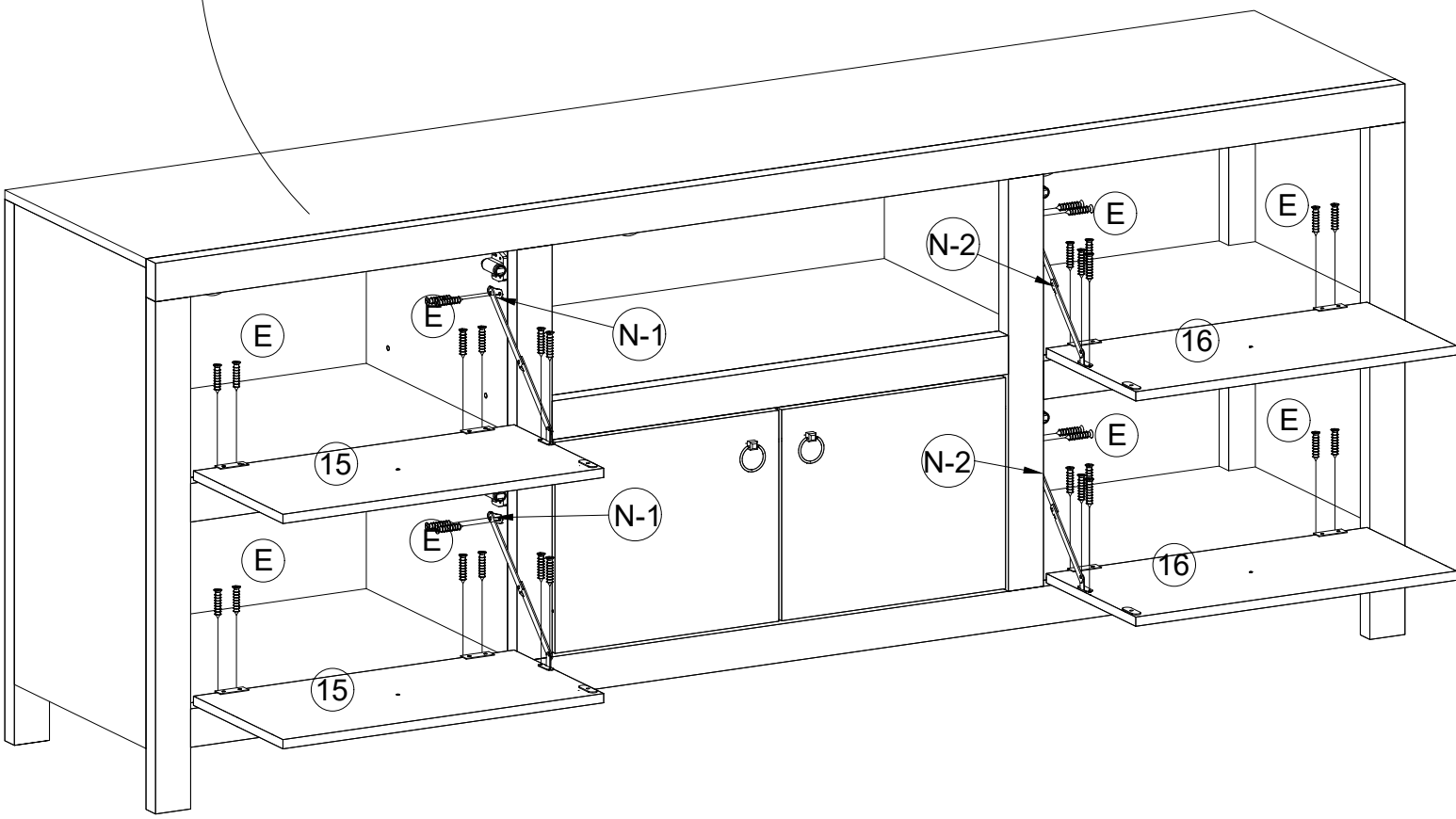

PRODUCT ASSEMBLY

26

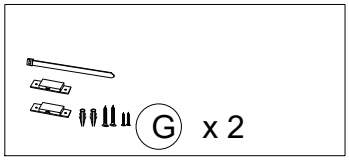

WALL

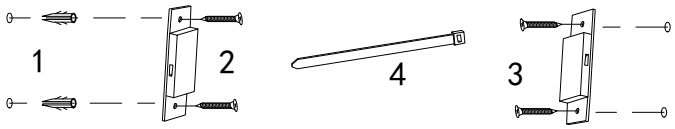

BOARD

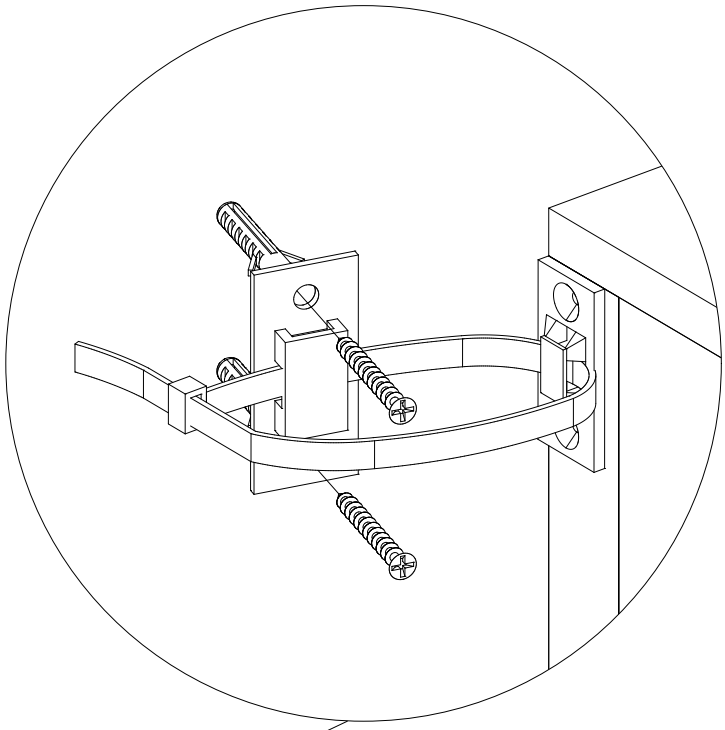

1.Drive the expansion screw into the appropriate position on the wall

2.Use long screws to install one of the plastic buckle seats in the appropriate position on the wall.

3.Use short screws to install the other plastic buckle in the appropriate position on the cabinet.

4.Push the cable tie through the two plastic buckle seats and pull tight.As shown in the figure.

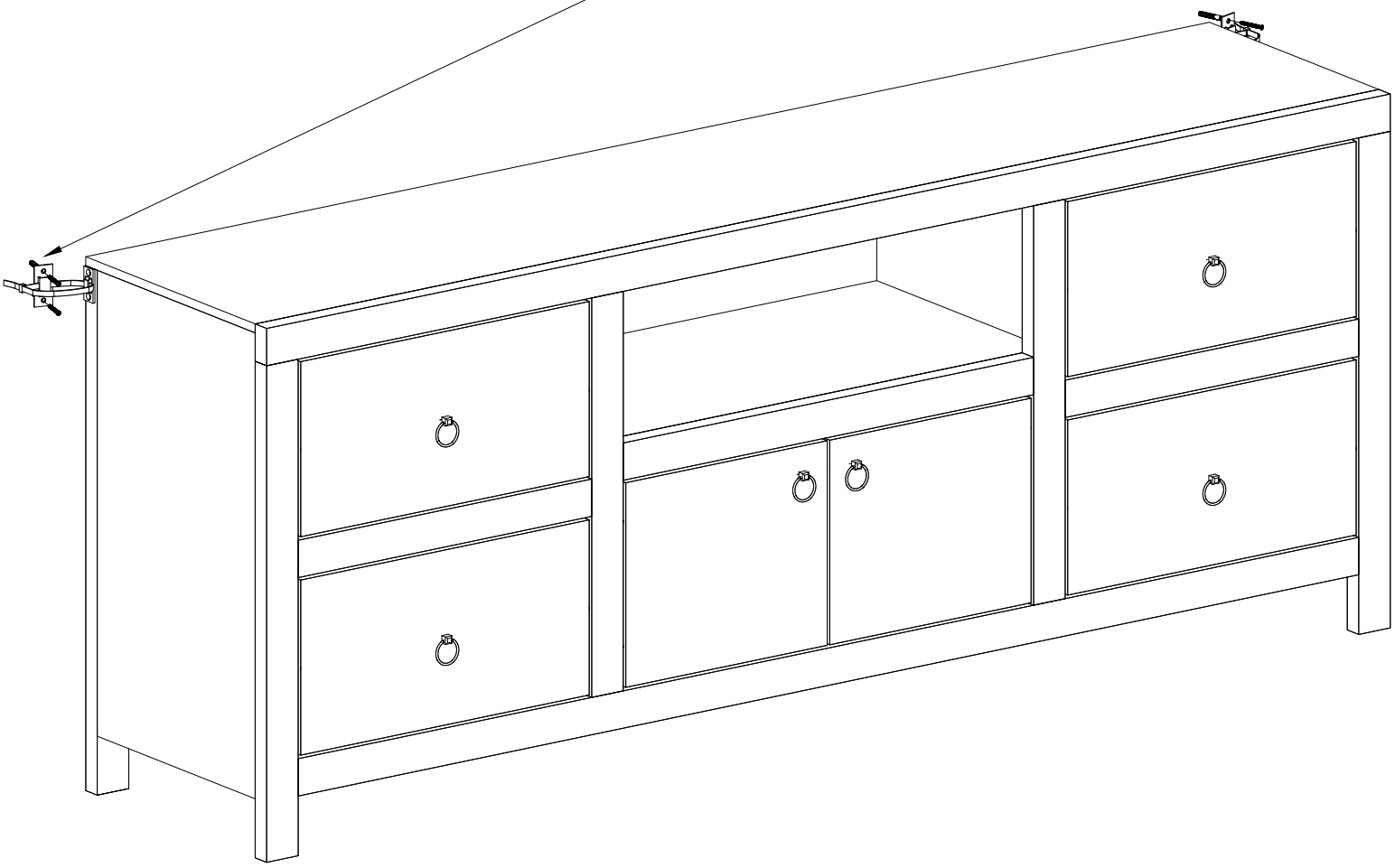

27 Finished assembly

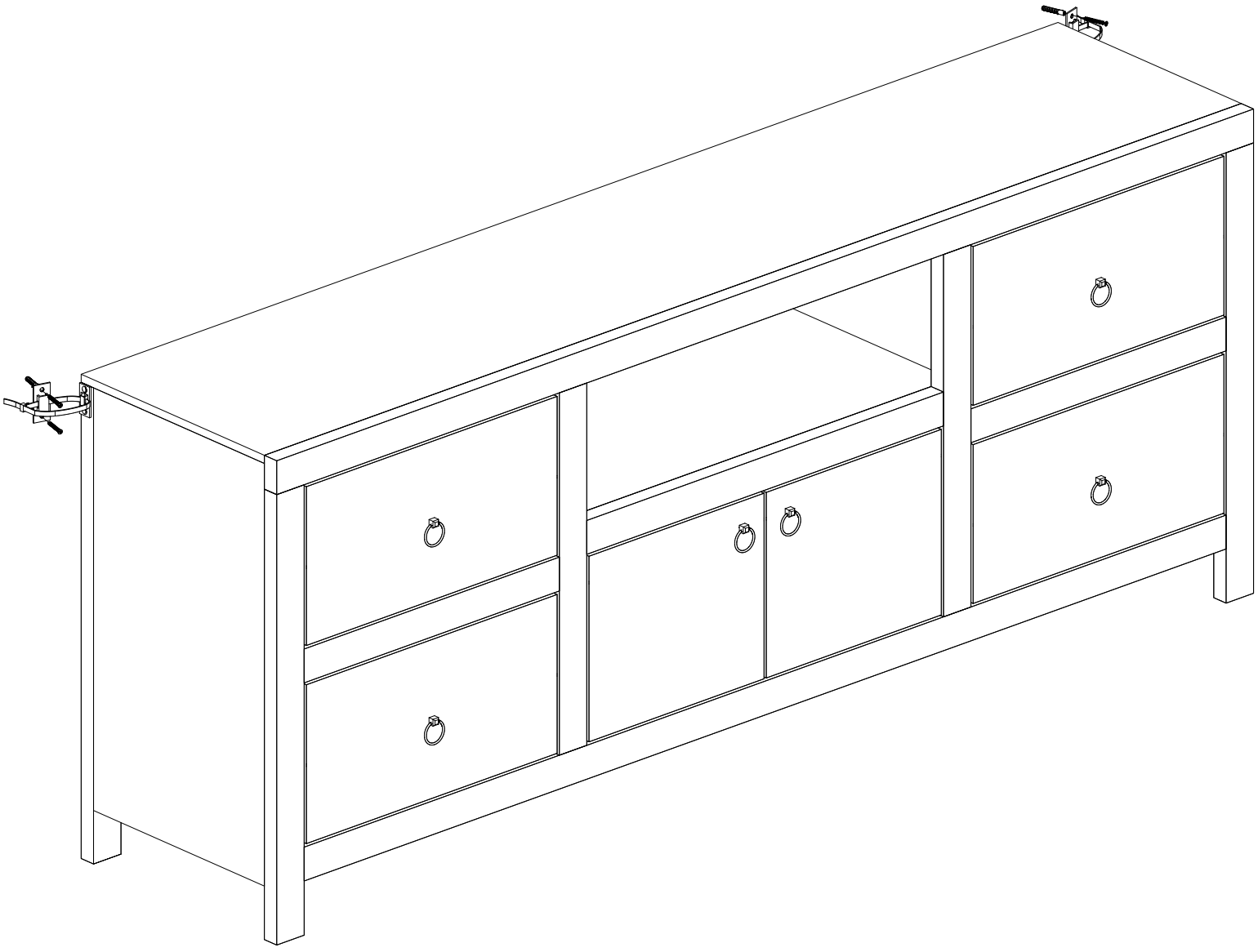

CONTACT US

Dear customer, thank you for purchasing Idealhouse products! We are proud to present our customers with high quality products!



If you have any product quality or use problems, please contact our customer service by email, we will ensure your satisfaction.



If you are satisfied with our products, please share your amazing experience with us and other customers! It would be our honor to hear from you!



Customer Service Team: support@idealhouse.vip