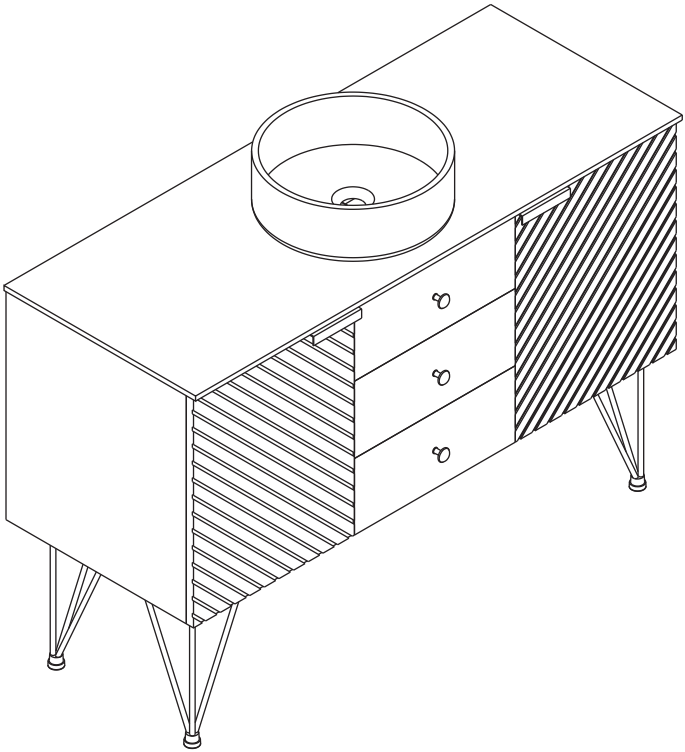

Notice:

1.Follow the installation instructions. Please confirm all accessories are preset before installation.

2. Do not fully tighten the screws during initial assembly. Fully tighten screws only once all pieces which are correctly assembled.

3. If you encounter any problems during installation, please contact our customer service.

4. Please unbox the item from the side with an open-label and put a carpet on the foor to avoid scratching it.



Recommended installers : 2



Put a carpet on the floor before unpacking

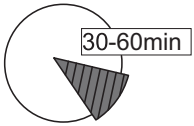

Estimate installation time: 30 minutes

Components - fittings
Please check you have all the panels listed below.
Note: The quantities below are the correct amount to complete the assembly. In some cases more fittings may be supplied than are required.

Item no.	Reference Image	Qty
A		x2
B	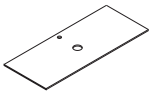	x1
C	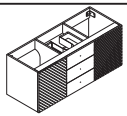	x1
D		x4
1	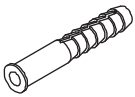	x2
2		x2

Item no.	Reference Image	Qty
3	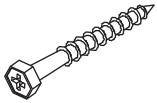	x2
4		x16
5	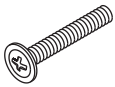	x3
6	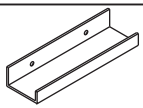	x2
7		x3
8		x6

1

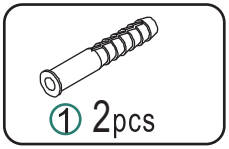

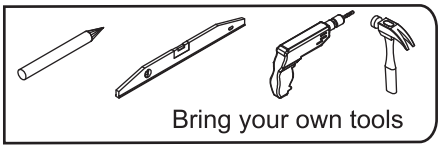

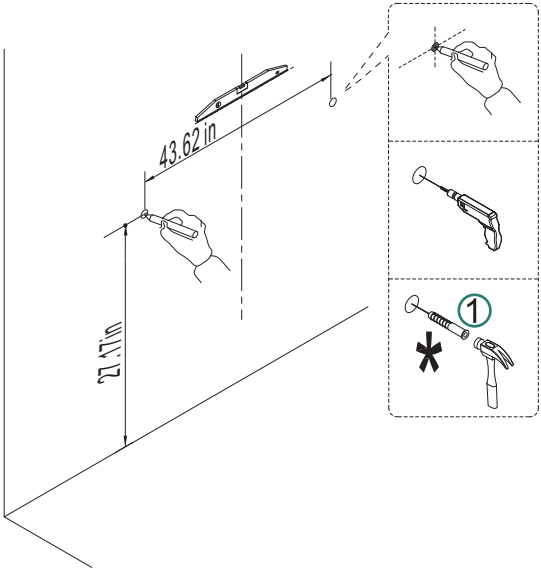

WARNING: To prevent falling down this product must be used with the wall attachment device provided.
WARNING: Assess the suitability of the wall to ensure that the fastening devices will withstand the forces generated.
WARNING: The maximum load-bearing capacity of this furniture is:40-60kg, please do not overload!
Load-bearing capacity primarily depends on the installation method and wall structure.
Always identify the wall type first and hire professional installers using fasteners specifically designed for that wall type.

2

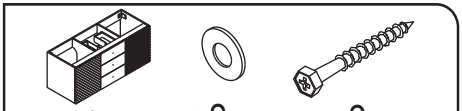

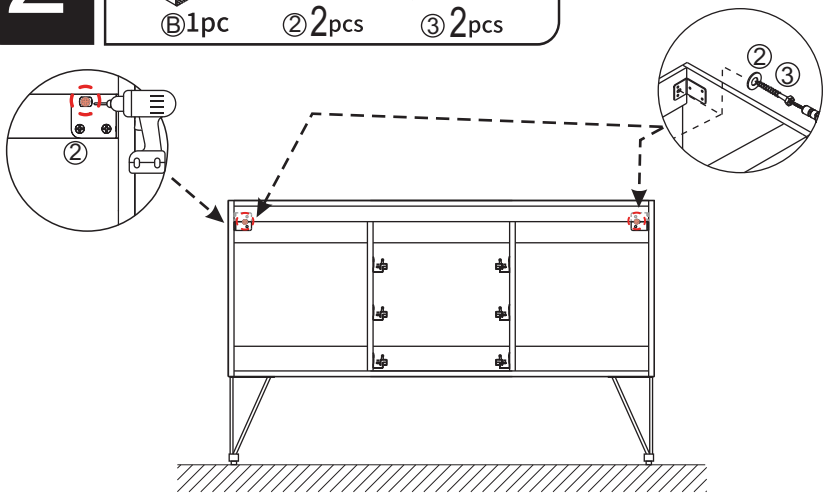

3

Ⓓ4pc ④12pcs

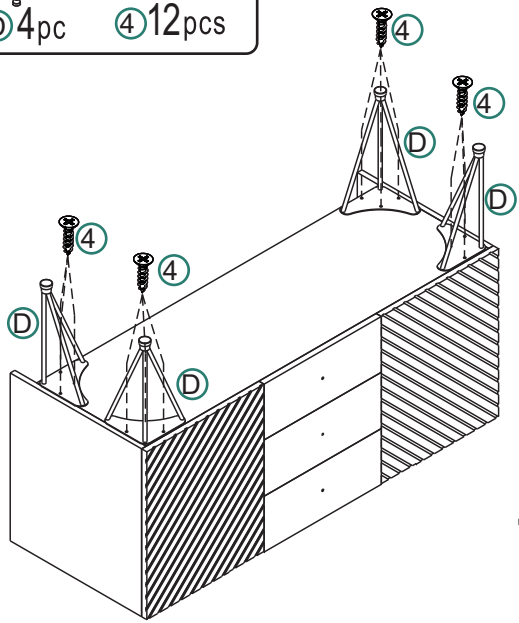

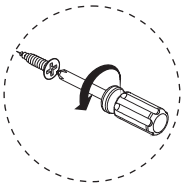

4

④4pcs ⑤3pcs ⑥2pcs ⑦3pcs

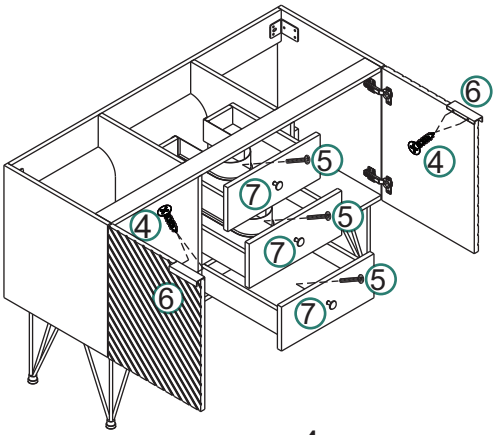

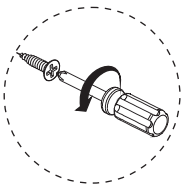

5

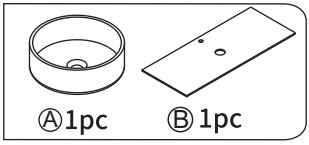

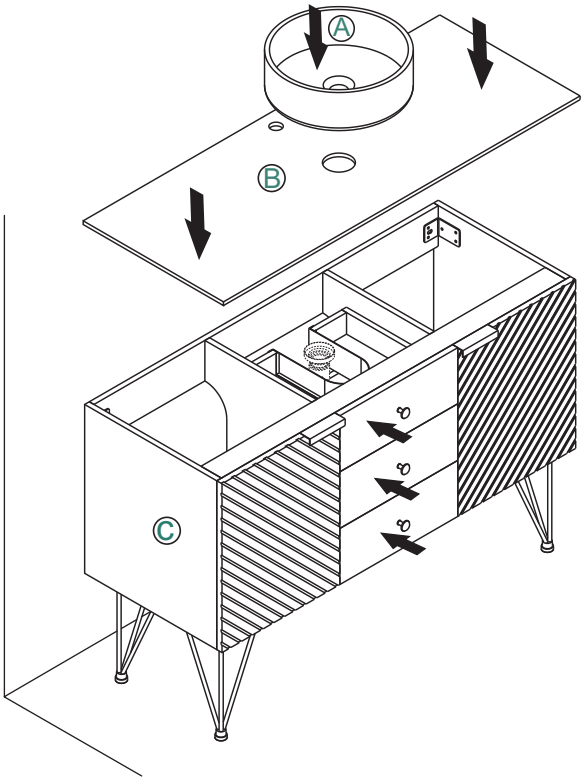

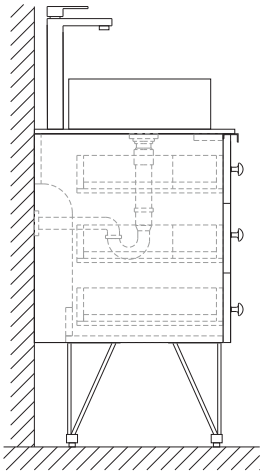

Pop-up Waste Installation

STEP 1
Install Pop-up Waste with over flow.

STEP 2
Connect the drain pipe.

This product does not include drainage accessories. The content on this page is provided as installation suggestions only. Please carry out the installation according to the requirements of the product you actually purchased.

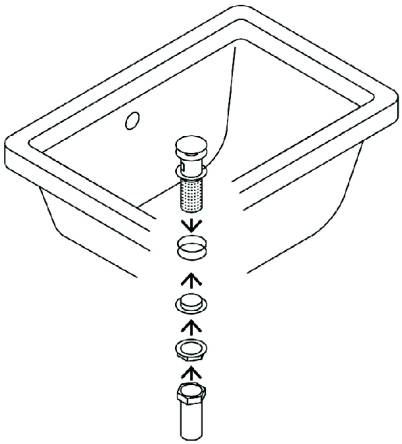

6

Installation of drain assembly

Turn the screw at the bottom of the guide rail counterclockwise!

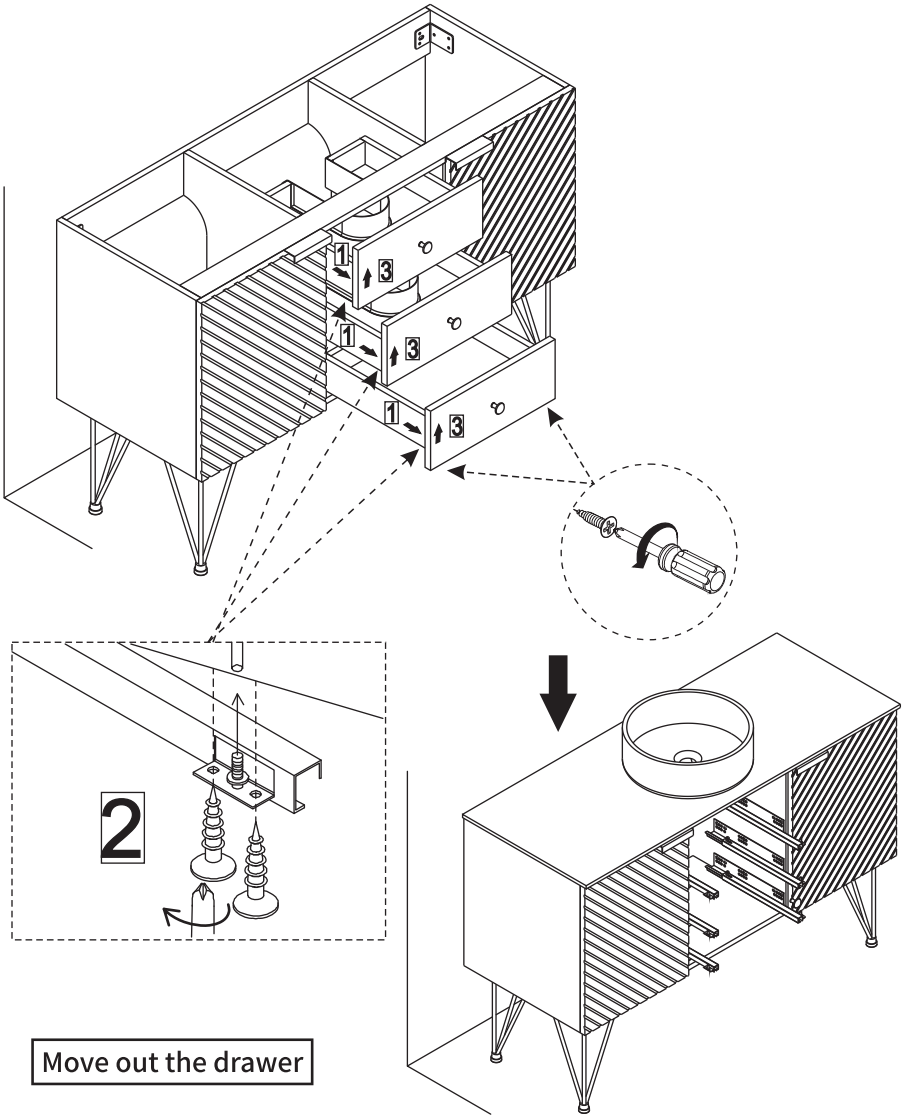

Move out the drawer

7

⑧6pcs

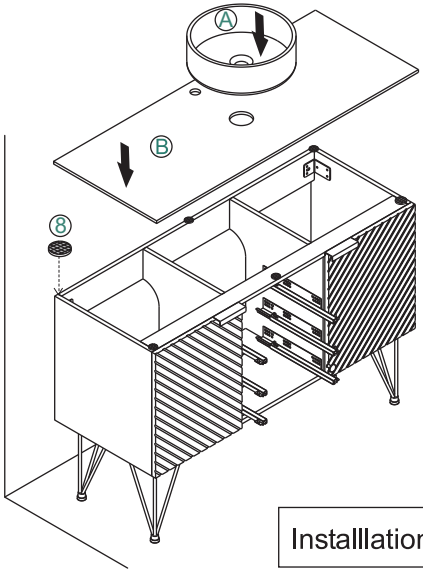

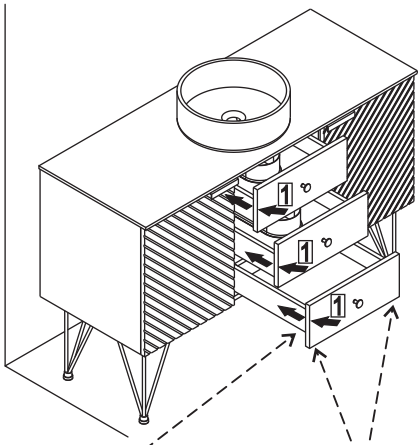

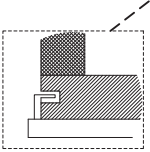

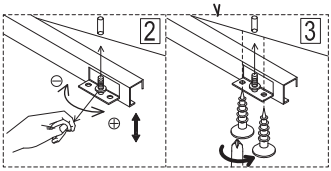

Installlation completed

Installation of drain assembly

HINGE ADJUSTMENT AND REMOVAL INSTRUCTION

DOOR INSTALL

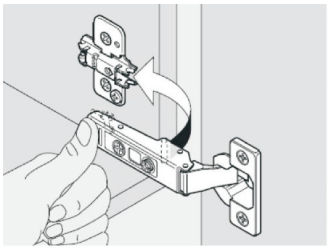

DOOR REMOVE

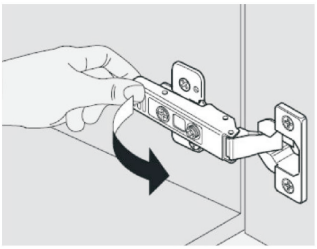

HOW TO ADJUST HINGES (if required)

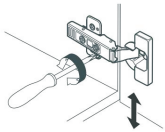

adjust height

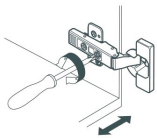

adjust laterally

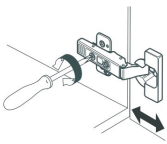

adjust depth

DRAWERS REMOVAL & RE—INSTALLATION (if required)

REMOVAL

RE—INSTALLATION

side adjustment

Side adjustment of the door is made by using the indicated screw.

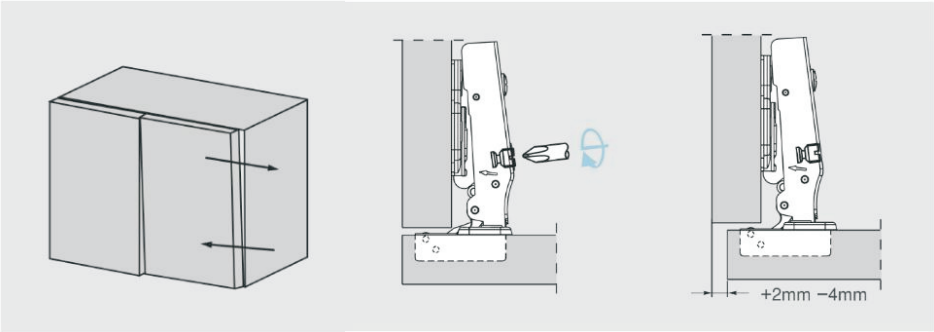

Depth Adjustment

Depth adjustment is made without loosening any screw. The door can be moved in or outby rotating the cam adjuster on the hinge arm.

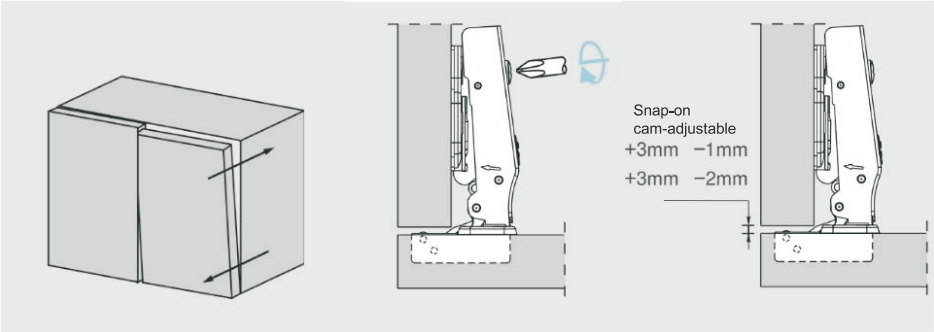

Height Adjustment

By loosening the two fixing screws to allow the mounting plate to slide up or down ,the door can be adjusted vertically by ±2mm.After retightening the screws, the Depth adjustment is done.

