BAYFORD BED - SMALL DOUBLE / DOUBLE / KING
ASSEMBLY INSTRUCTIONS

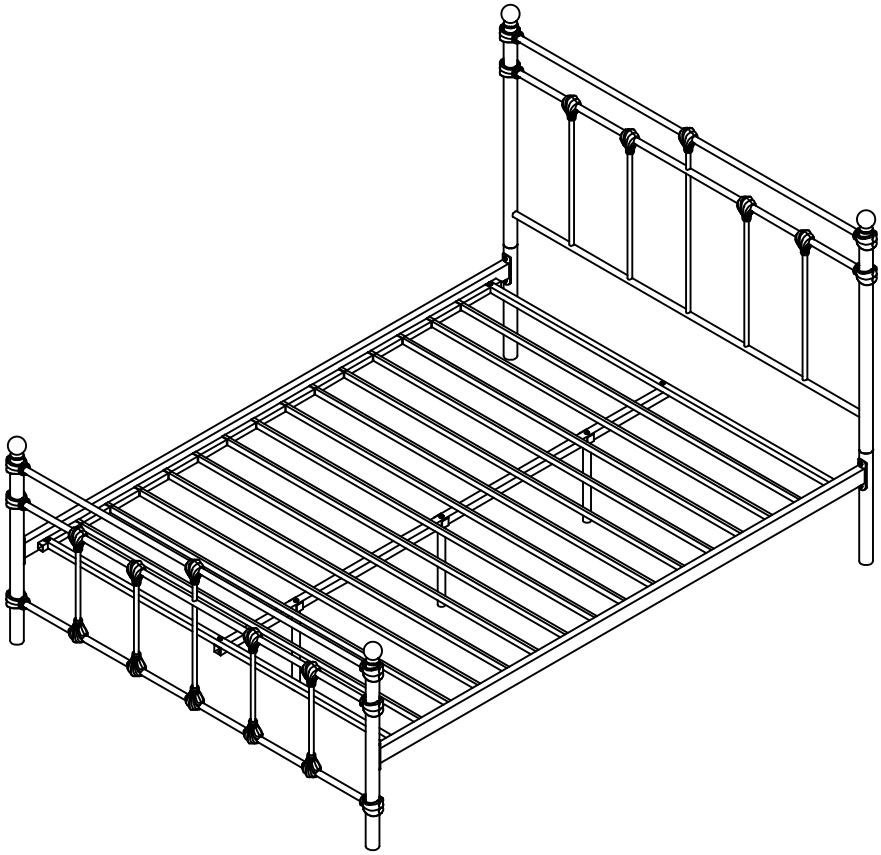

SlumberWorx

Safety & Care Advice

IMPORTANT – READ CAREFULLY & KEEP THIS FOR FUTURE REFERENCE

Assembly

- Keep children & animals away from the bed assembly working area, small parts have potential to choke if swallowed.
- During assembly we recommend that children should be kept away due to possible risk of injury & that assembly is carried out by a competent adult.
- Make sure there is enough space to layout the parts before beginning assembly.
  This product has been constructed to be used in a domestic environment only & is not recommended for commercial use.
- Assemble the item as close to its final position (within the same room) as possible.
- Assemble on a soft, level service to avoid damaging the item or the floor.
- We do not recommend the use of power tools when assembling as this could cause damage to the item, only use hand tools.
- Assemble all parts, screws & bolts loosely during assembly. Only once the item is complete should you fully tighten the fixings.
- The item can be assembled with one person but parts of the assembly maybe easier with the help of another person.
- Dispose of all packaging & waste carefully & responsibly.

Care & Maintenance

- Use a dry cloth when cleaning the product, furniture polish or anything containing chemicals that can react with the product are not advised.
- From time to time check that there are no loose screws, nuts or bolts. If there are then re-tighten.

Caution Notice

- Avoid placing this bed near any heat sources, windows or other furniture.
- Do not use this bed if any parts are broken or missing.
- This bed is not recommended for children under the age of 4.
- Periodically check that all fittings are properly tightened.
- We recommend that the bed should be placed away from windows, blind cords, curtains pulls or other furniture if being used by a child.
- We recommend that the bed is placed tight against a wall or there is a gap of at least 30cm between the wall & the side of the bed.
- Maximum recommended weight capacity of 200kg

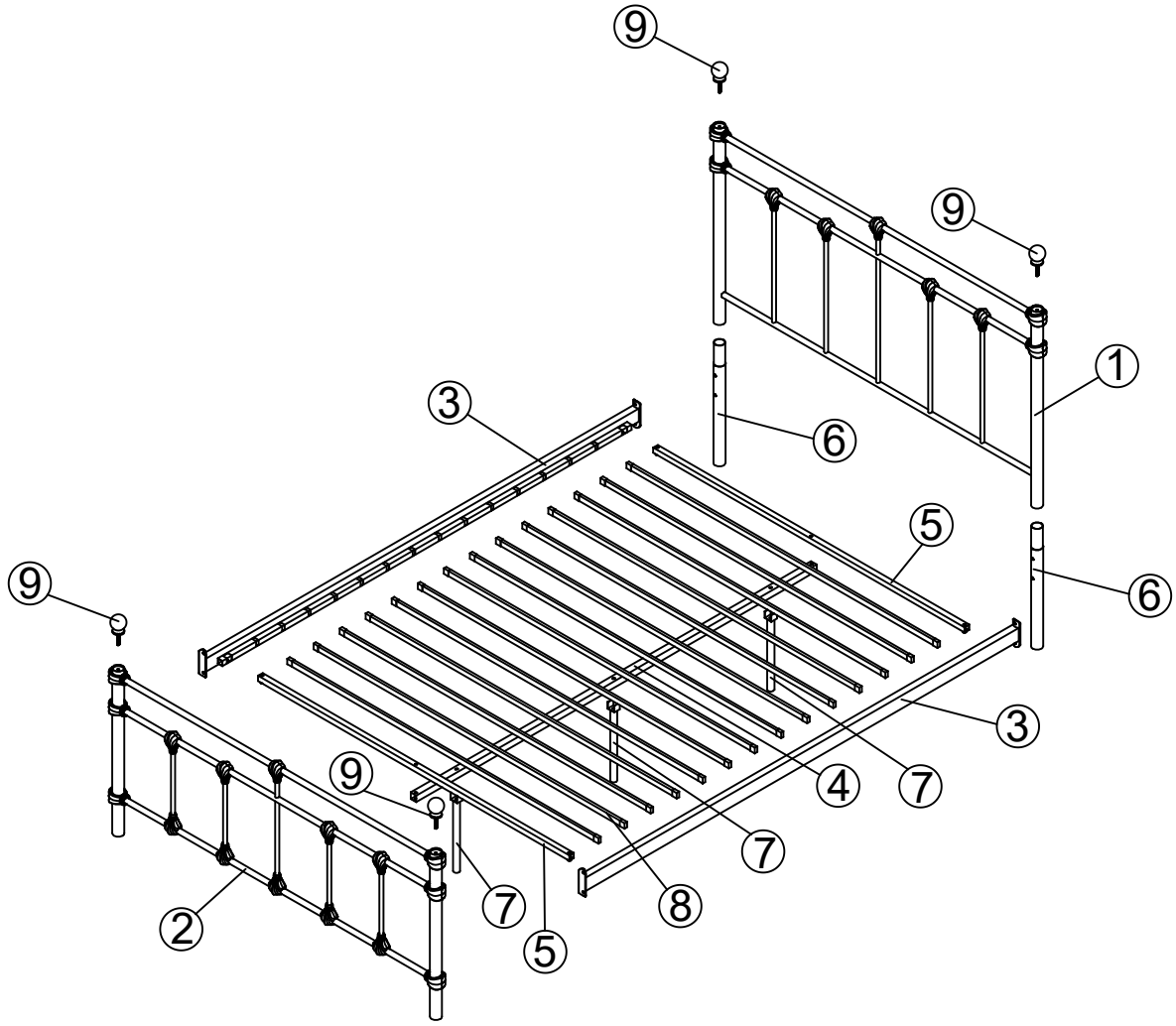

A	B	C	D	E	F
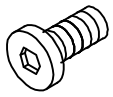					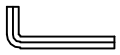
M8*20MM 8PCS	M6*30MM 6PCS	M6*35MM 3PCS	M6*16MM 4PCS	M6 4PCS	M4 1PC
G					
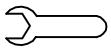					
M6 1PC					

STEP 1

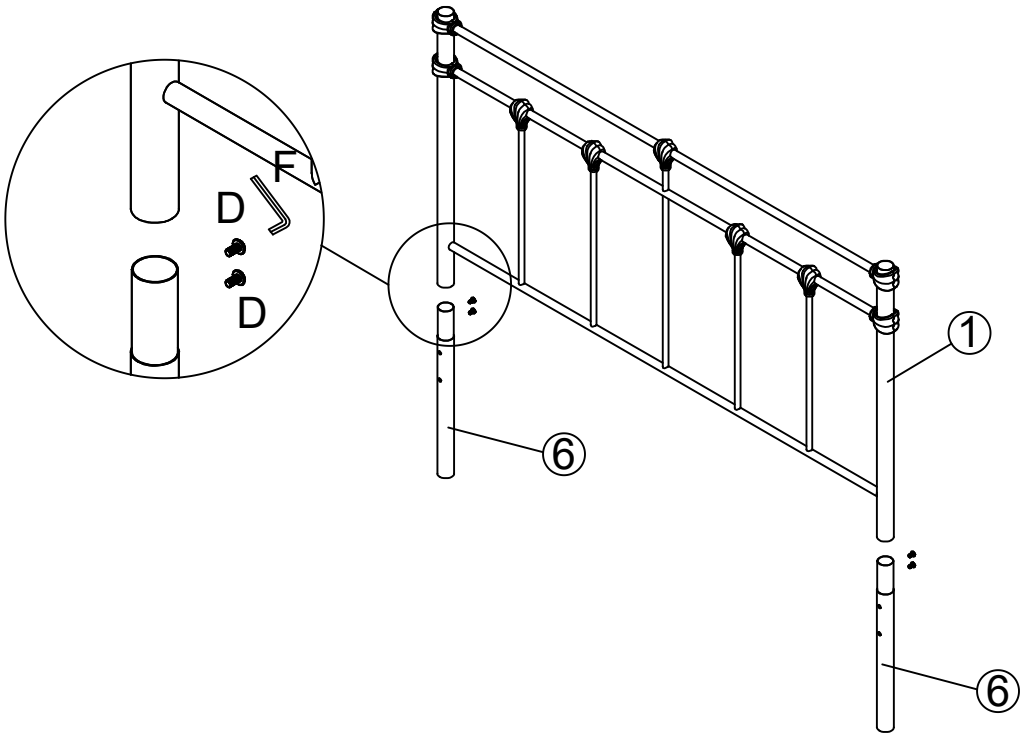

STEP 2

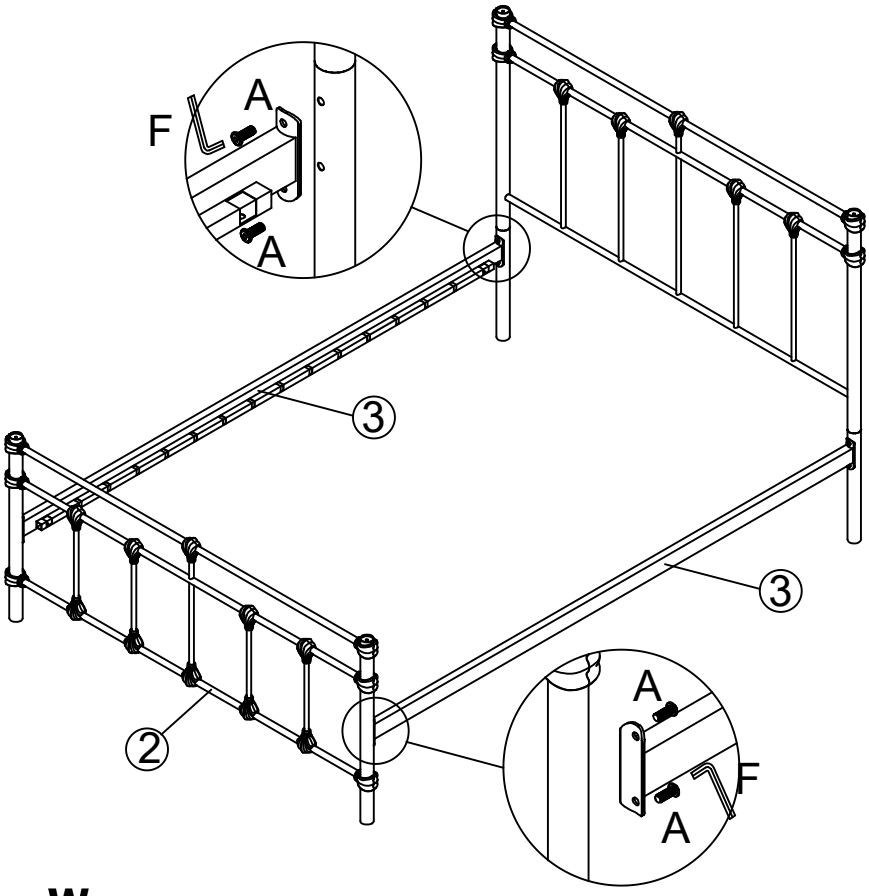

SlumberWorx

STEP 3

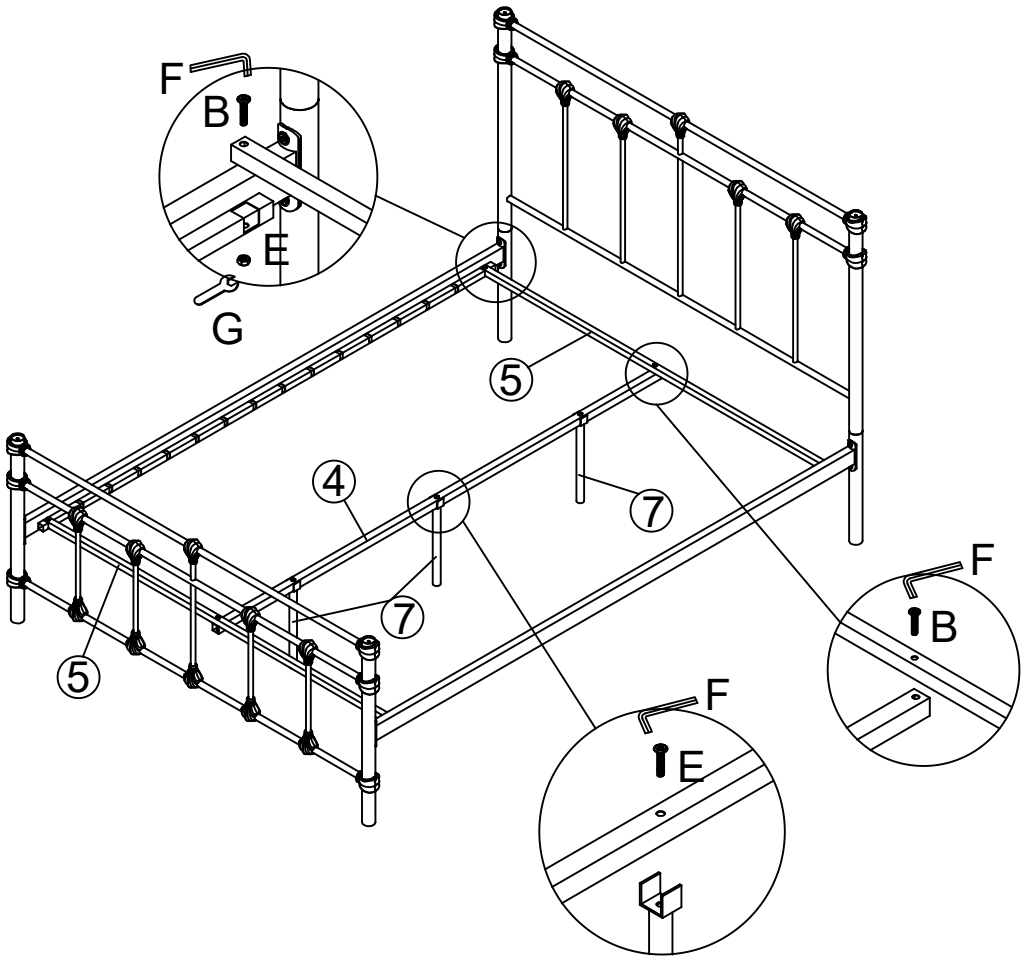

STEP 4

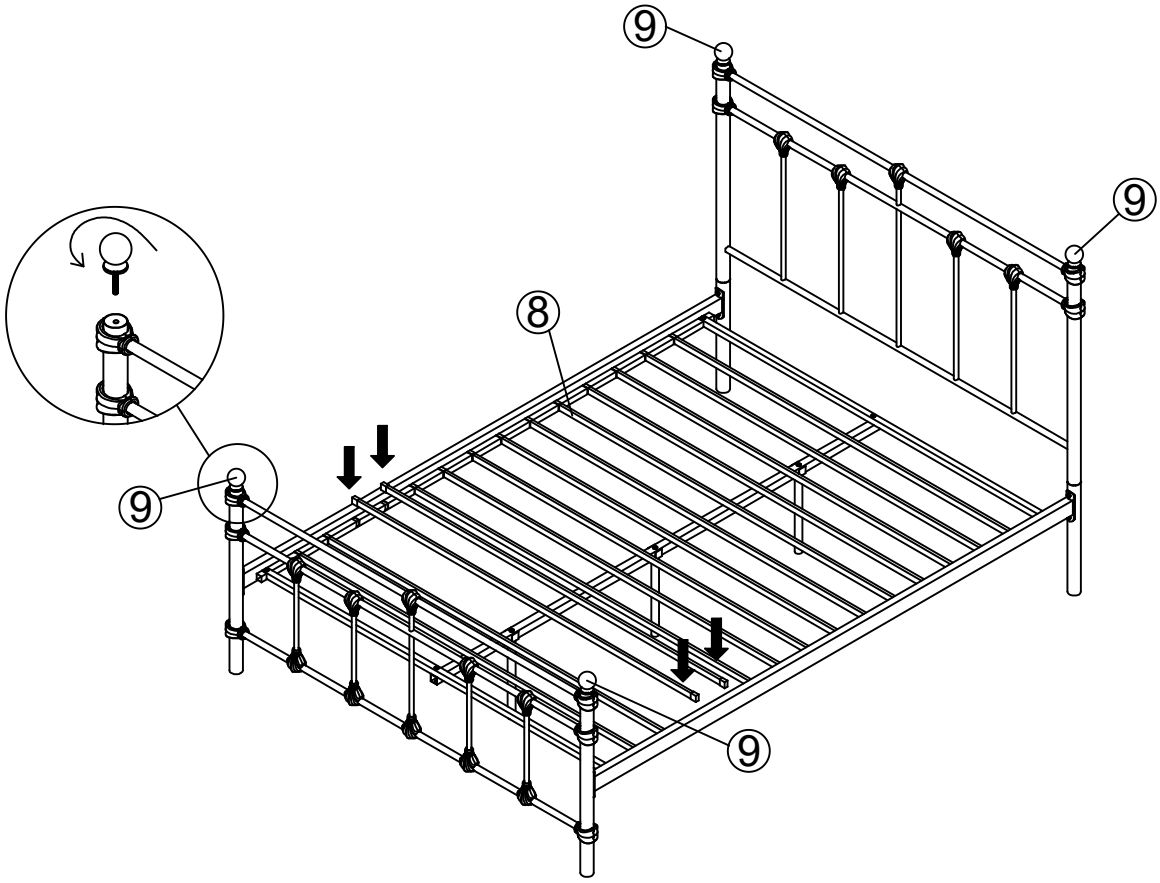

SlumberWorx