INSTALLATION
Product Manual

Version: 750028US-01-26A-AA

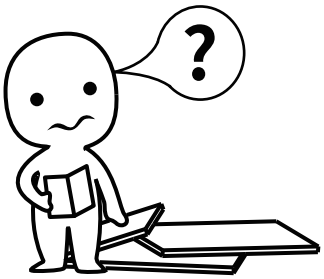

IMPORTANT INFORMATION!

please read the entire manual before starting to assemble and/or using this product.follow the manual thoroughly and keep it for further reference.



AVOID SCRATCHES!

In order to avoid scratching this furnuture should be assembled on a soft layer-could be a rug.

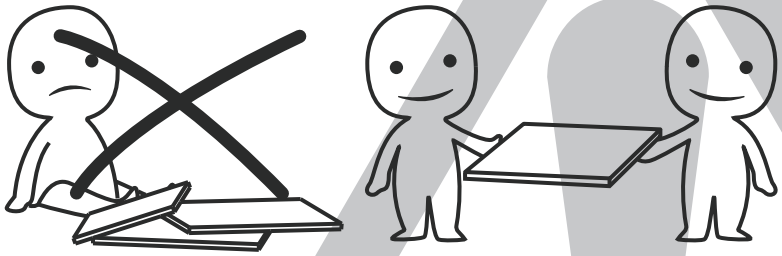

IMPROVE EFFICIENCY !

Try to find a partner to install with you, which can speed up the installation efficiency and shorten the time.

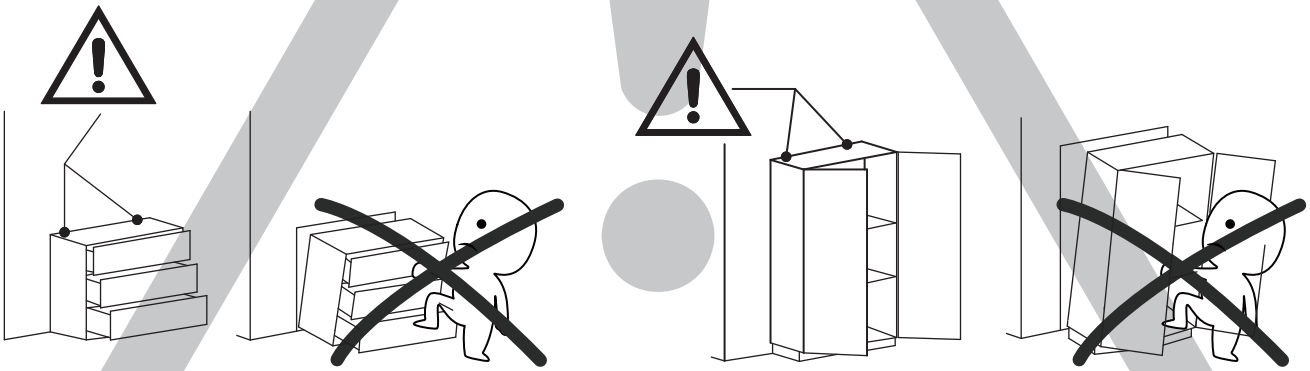

ANTI-TOPPLE WARNING !

Overturned furniture can cause serious or fatal crush injuries. To prevent tipping over, be sure to use the wall attachment, if not included with this product. Please purchase the wall attachment that fit your wall. If unsure, seek professional advice. Please read and follow each step of the instructions carefully.

IMPORTANT !

It is important that any product which is assembled using any kind of screw is re-tightened 2 weeks after assembly,and once every 3 months - in order to assure stability through-out the lifespan of the product.

For regular maintenance and cleaning of the product, for the frame, please use a rag dipped in neutral detergent to fully wipe it, and then dry it with a clean rag.For glass materials, wipe with a rag dampened with water glass cleaner, and then dry with a dry rag.

Do not use an electric screwdriver, and do not use too much force when installing, because the board is easy to break.

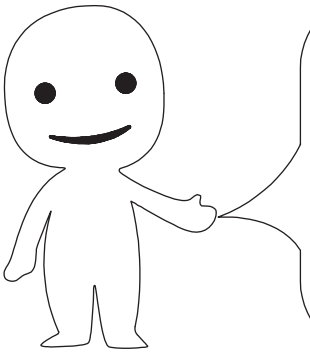

Please prepare the following tools

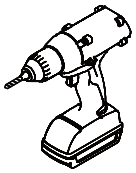

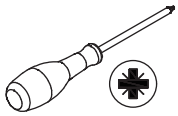





When installing, please carefully confirm whether each screw corresponds to the manual, accessories with similar shapes can be distinguished by size

AC x 2	AD x 1	AE x 1	AF x 1
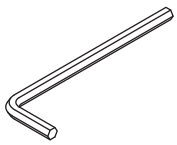	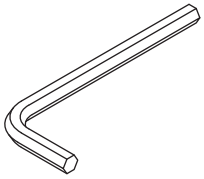	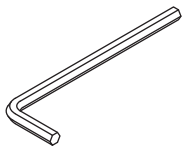	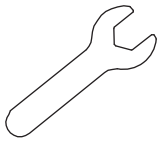
M4	M12	M5	M8

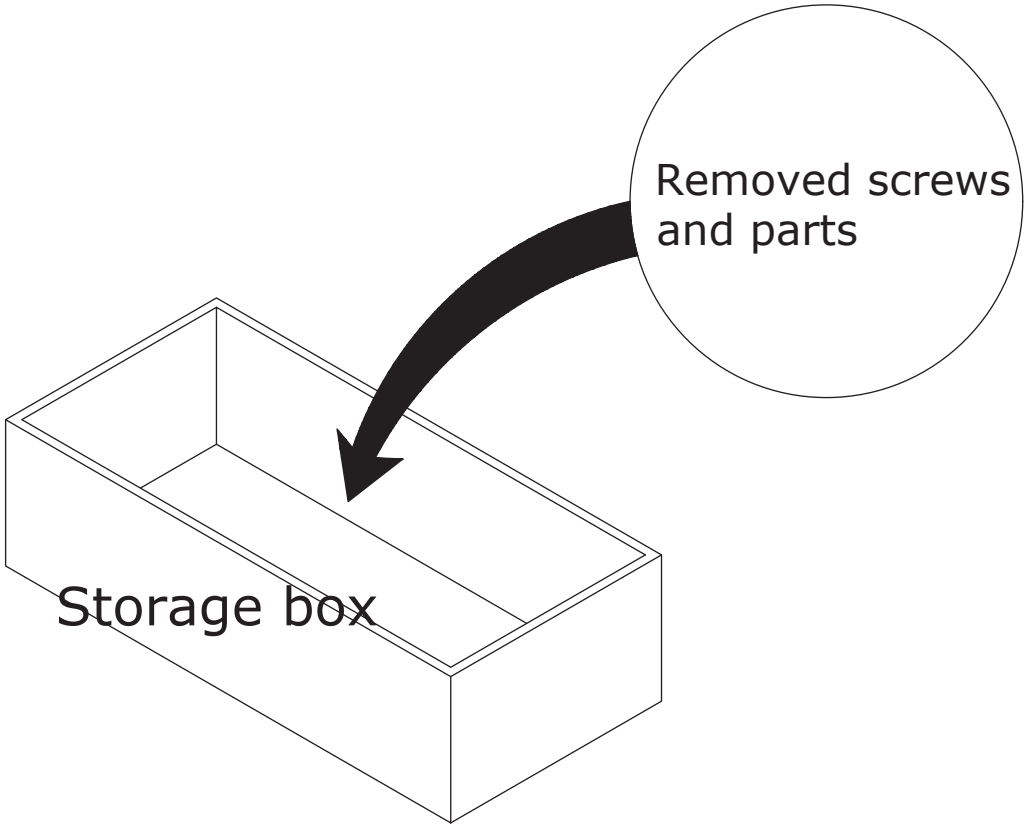

Please organize the removed panels and parts.

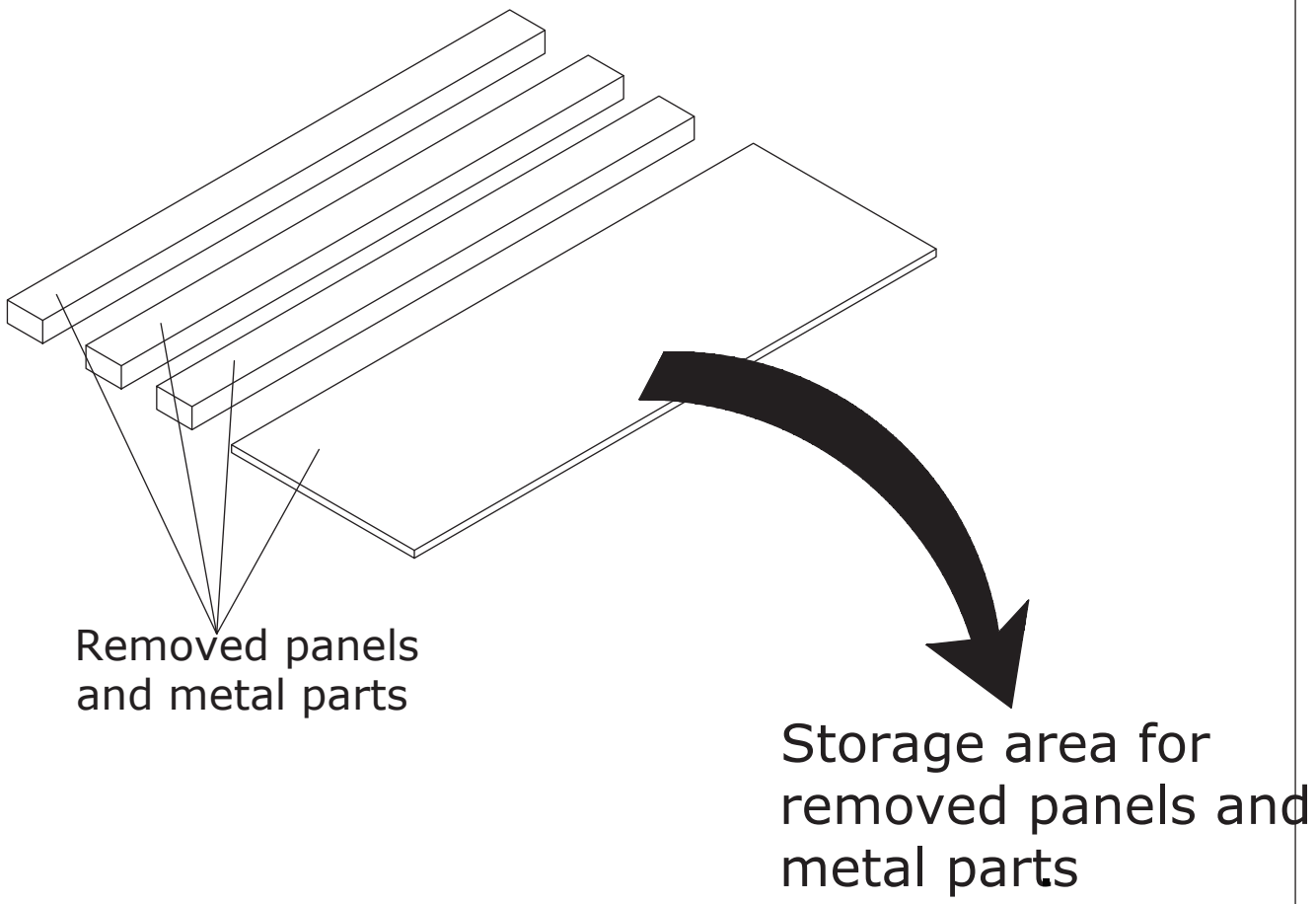

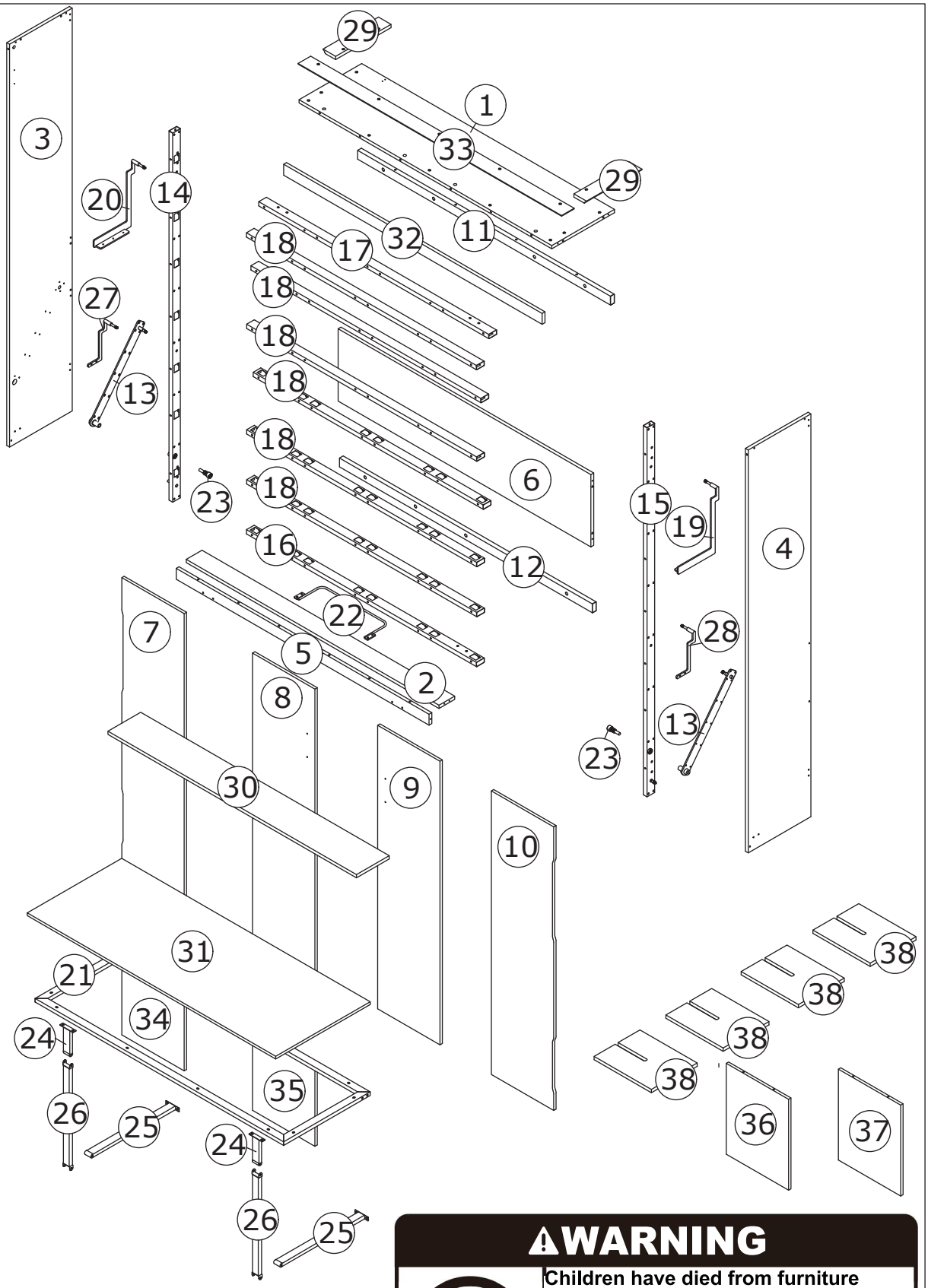

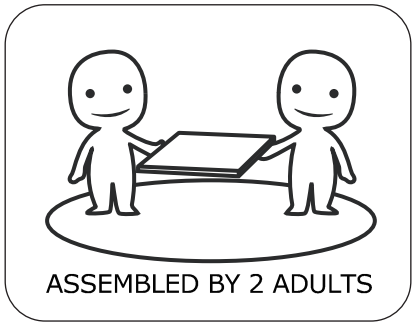

⚠WARNING



Children have died from furniture tipover.To reduce the risk of furniture tipover:

- ALWAYS install Anti-tip device provided.
- NEVER put a TV on this product.
- NEVER allow children to stand,climb or hang on drawers,doors,or shelves.
- NEVER open more than one drawer at a time.
- Place heaviest items in the lowest drawers.

This is a permanent label.
Do not remove!

1

AC x 1

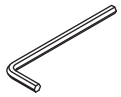

M4

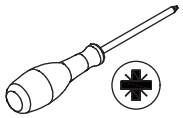

Use a wrench (AC) to remove the screws (AM) and panel 31, and place the screws (AM) in the storage box.

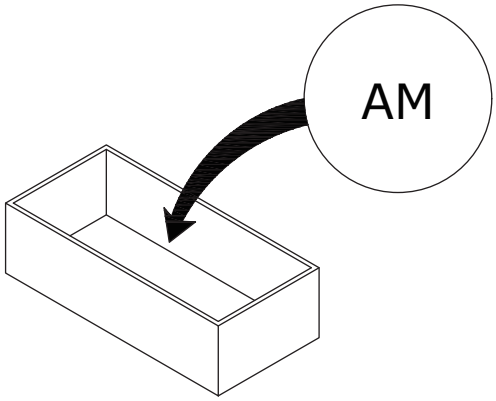

Storage box

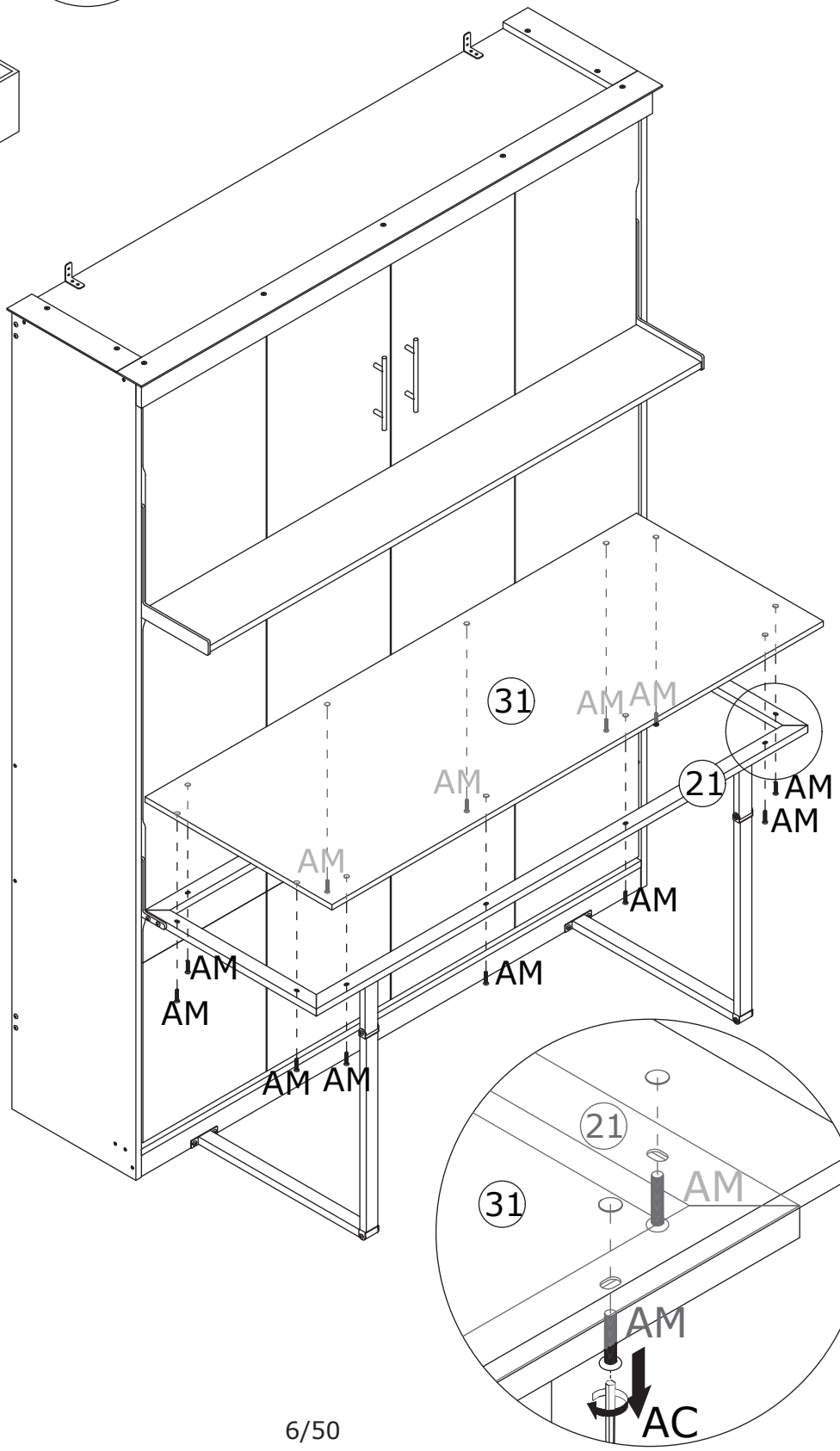

2

AC x 1

M4

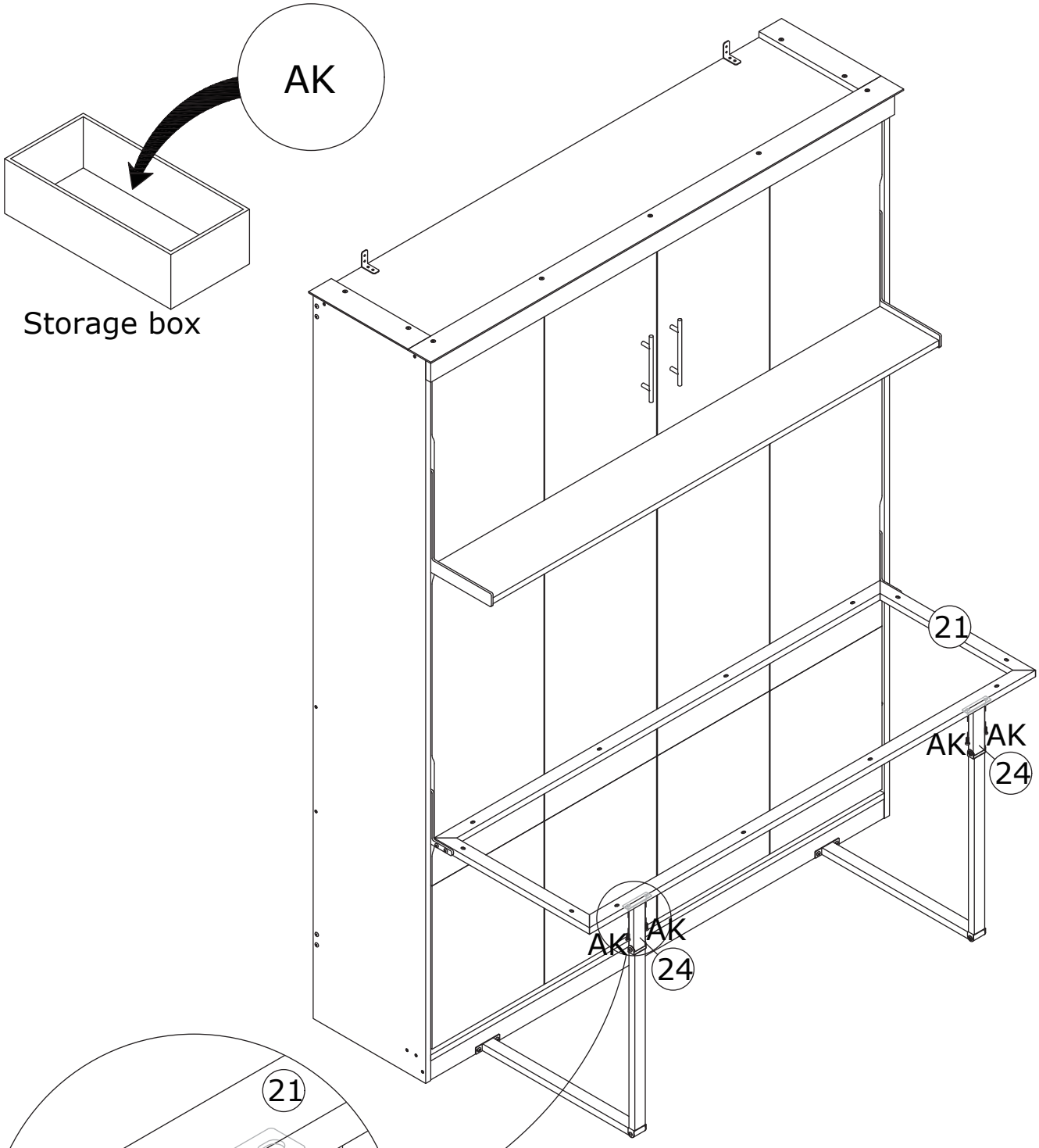

Use a wrench (AC) to remove the screw (AK) and component 21, and place the screw (AK) in the storage box.

3

AC x 1

M4

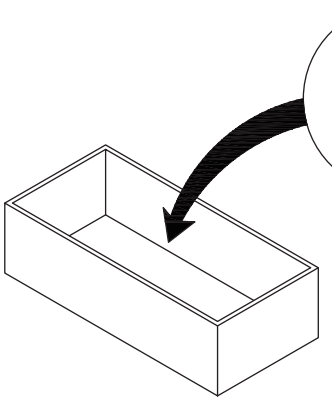

Storage box

Use a wrench (AC) to remove the screw (AL) and component 21, and place the screw (AL) in the storage box.

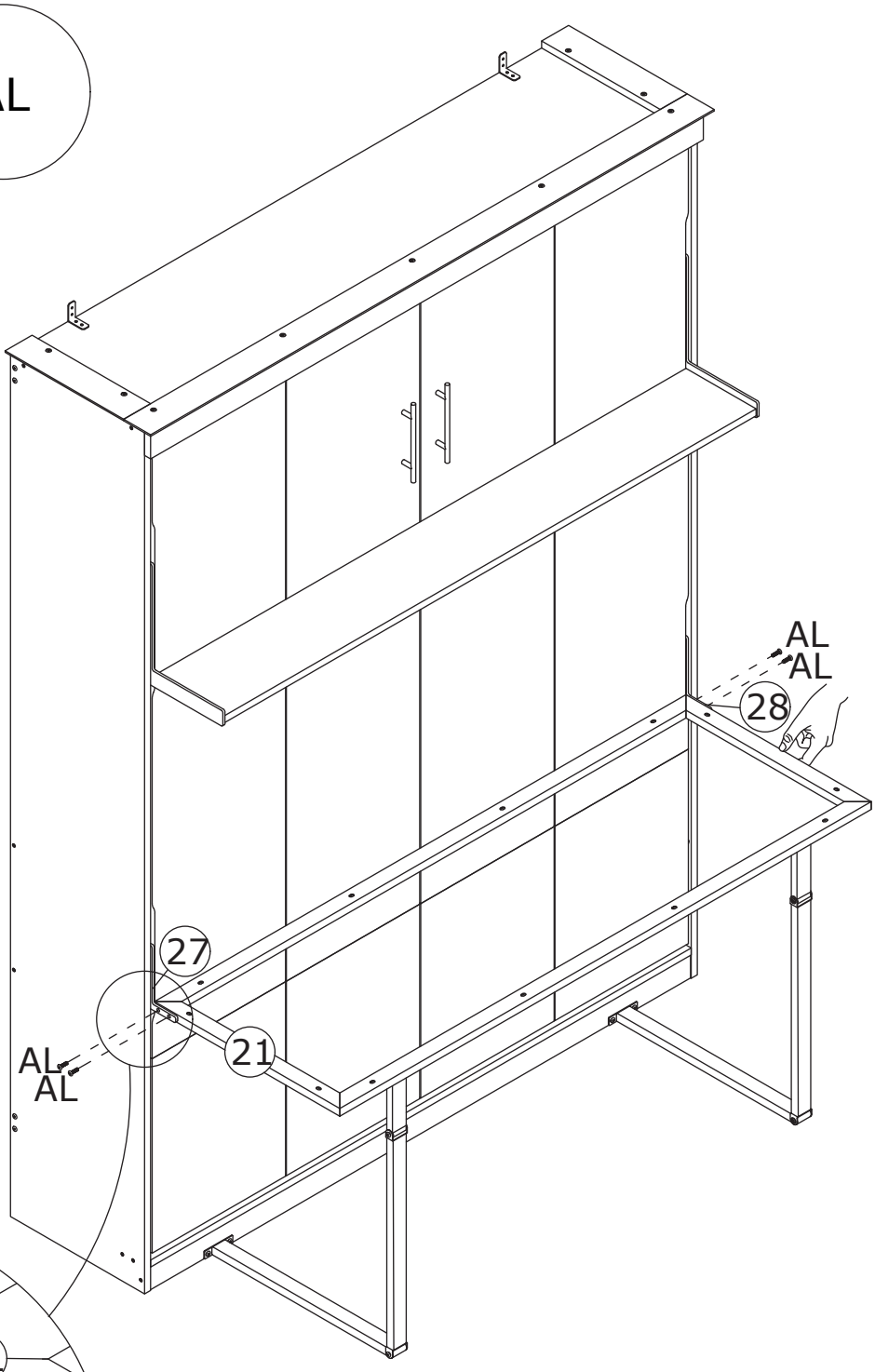

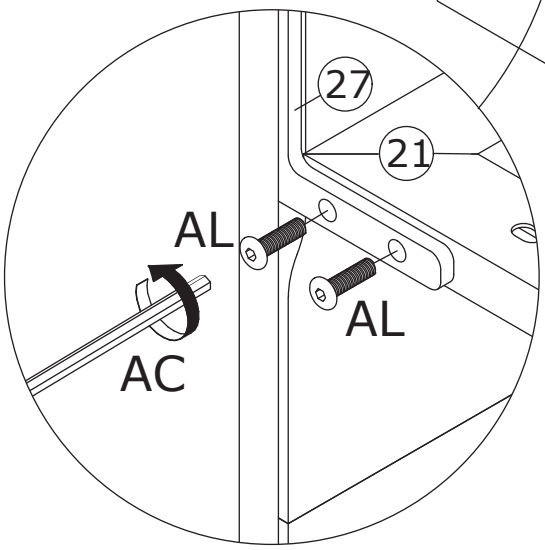

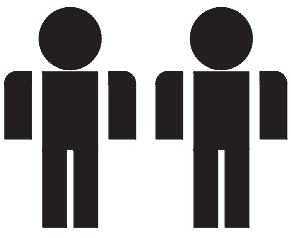

2 OF ADULTS

4

AC x 2

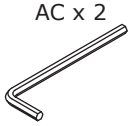

M4

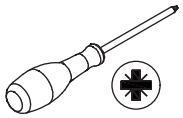

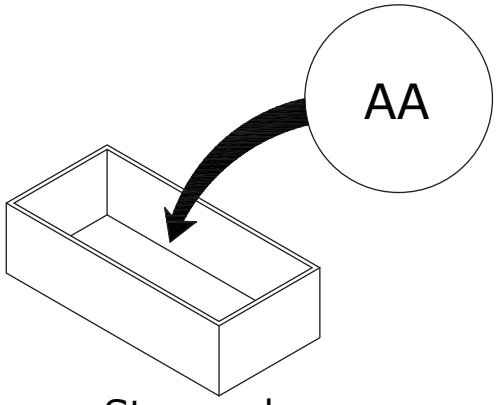

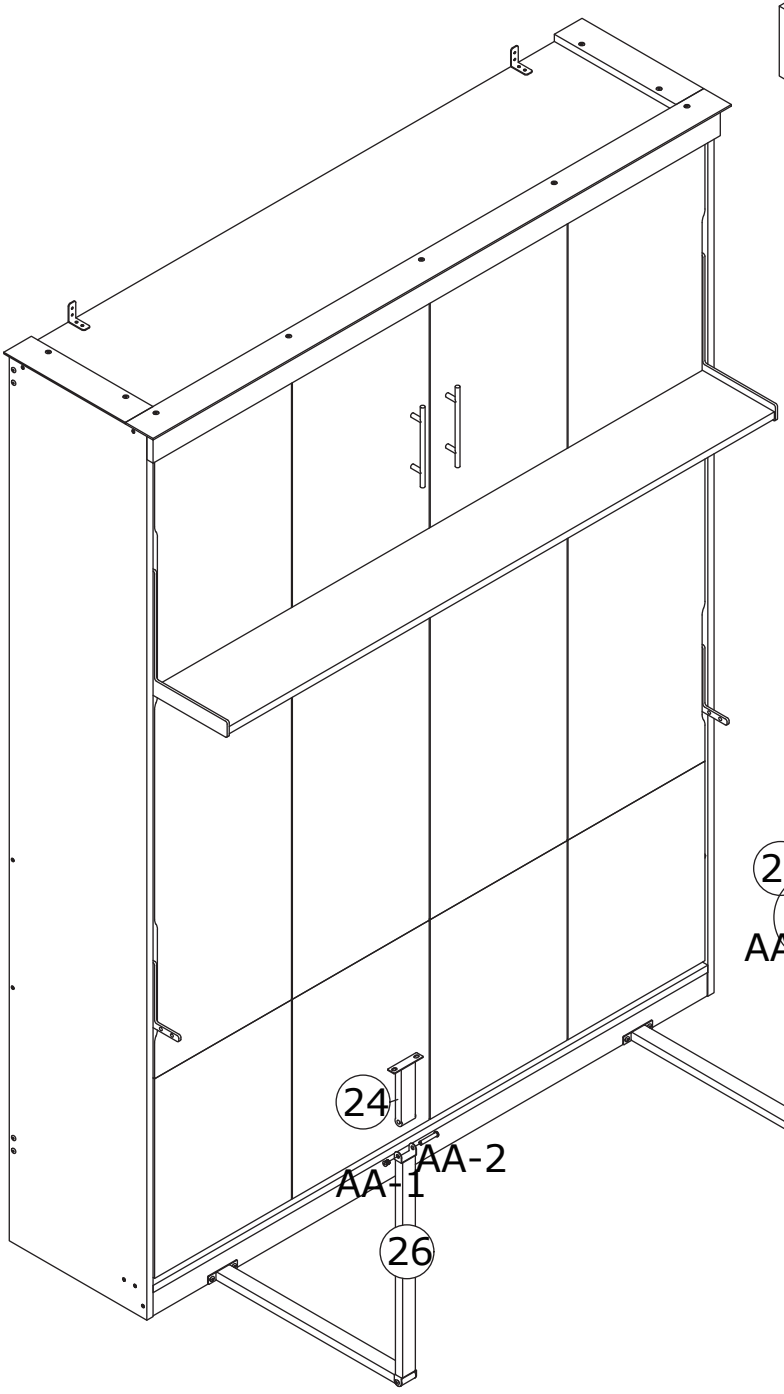

Use a wrench (AC) to remove screw (AA-1), screw (AA-2), and part 24, and place screw (AA) in the storage box.

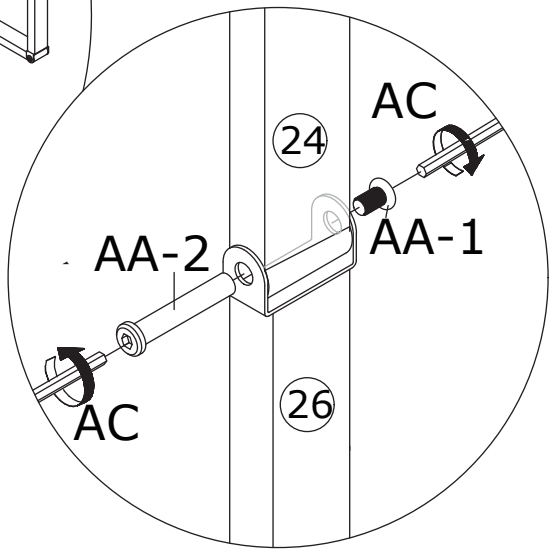

5

AC x 2

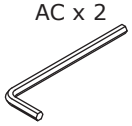

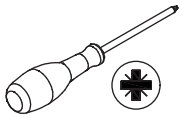

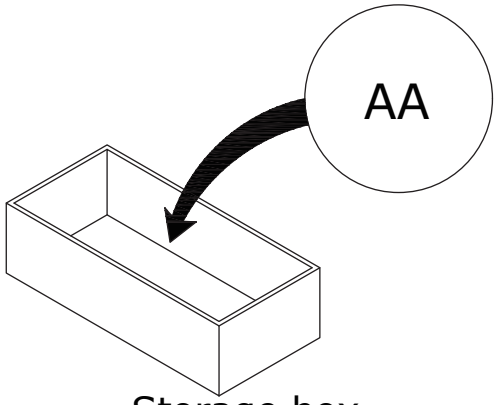

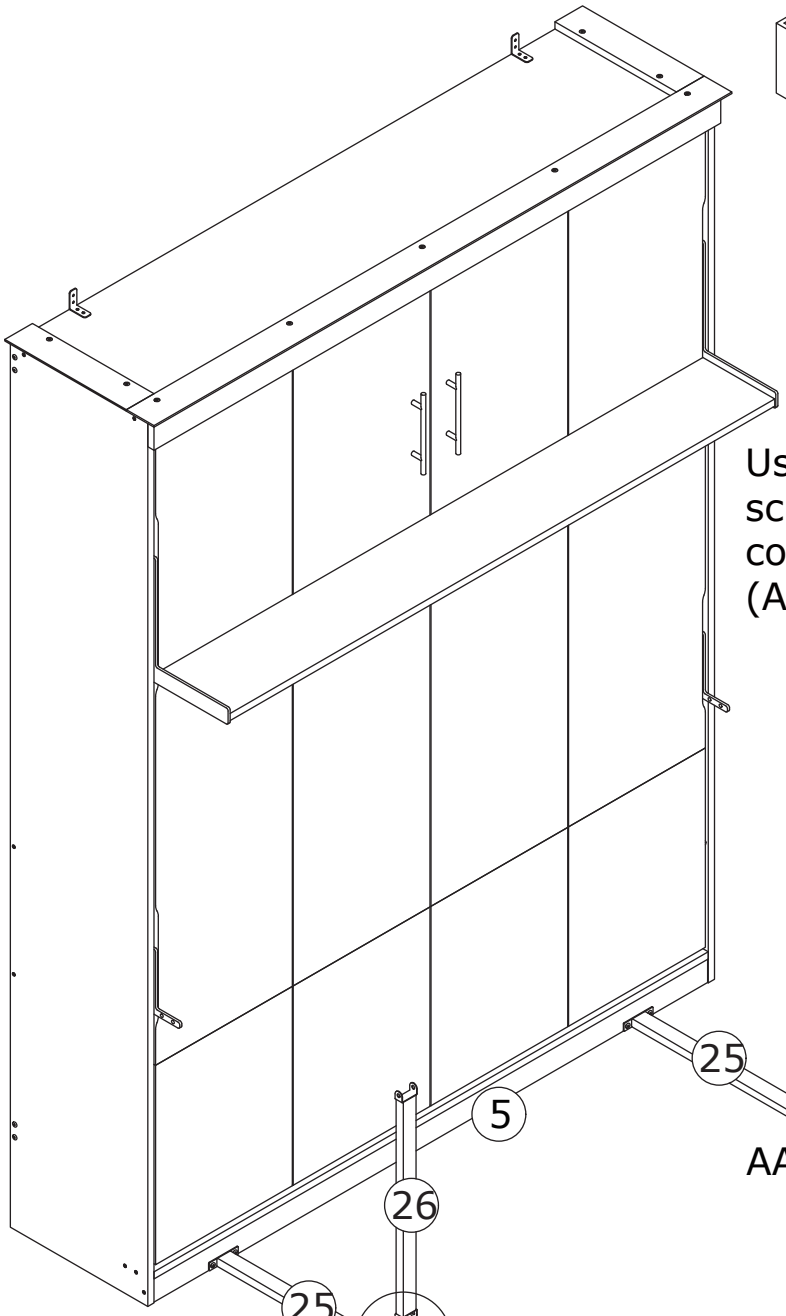

Use a wrench (AC) to remove screw (AA-1), screw (AA-2), and component 26, and place screw (AA) in the storage box.

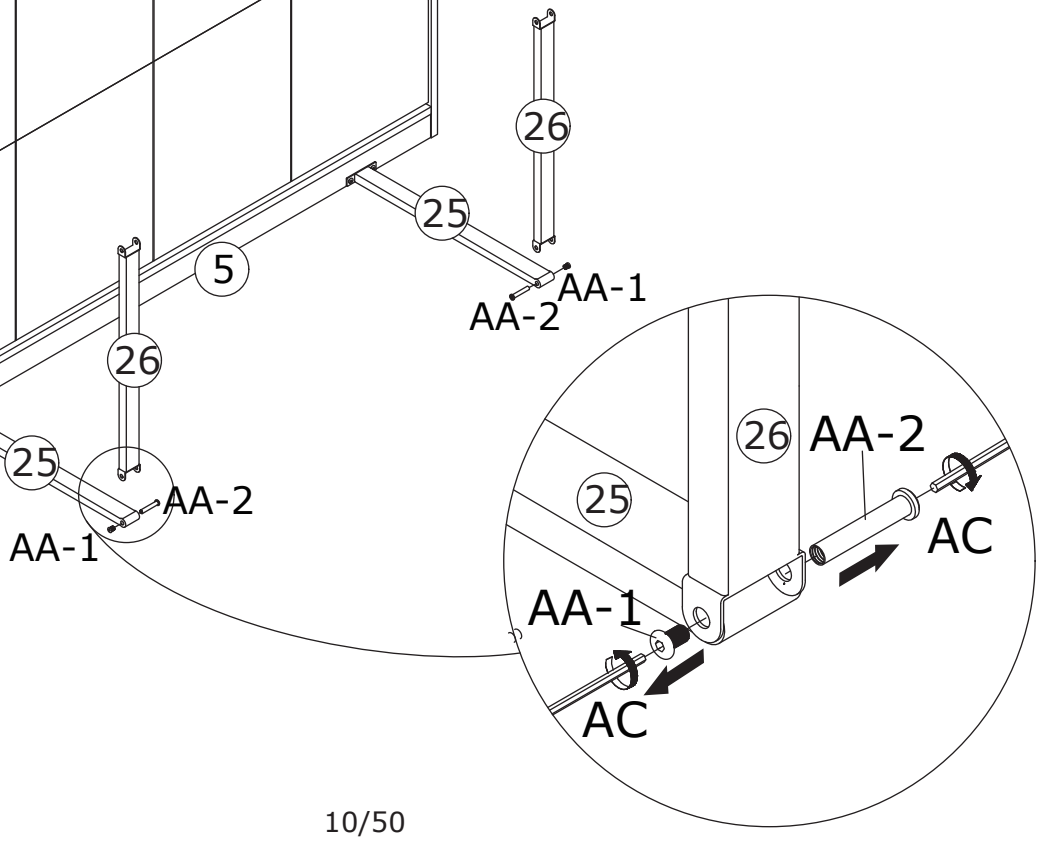

6

AC x 1

M4

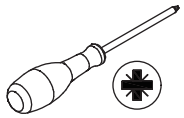

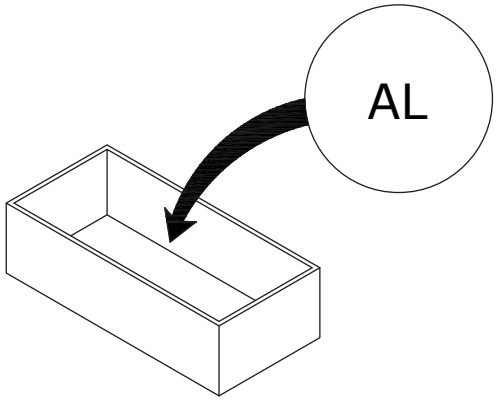

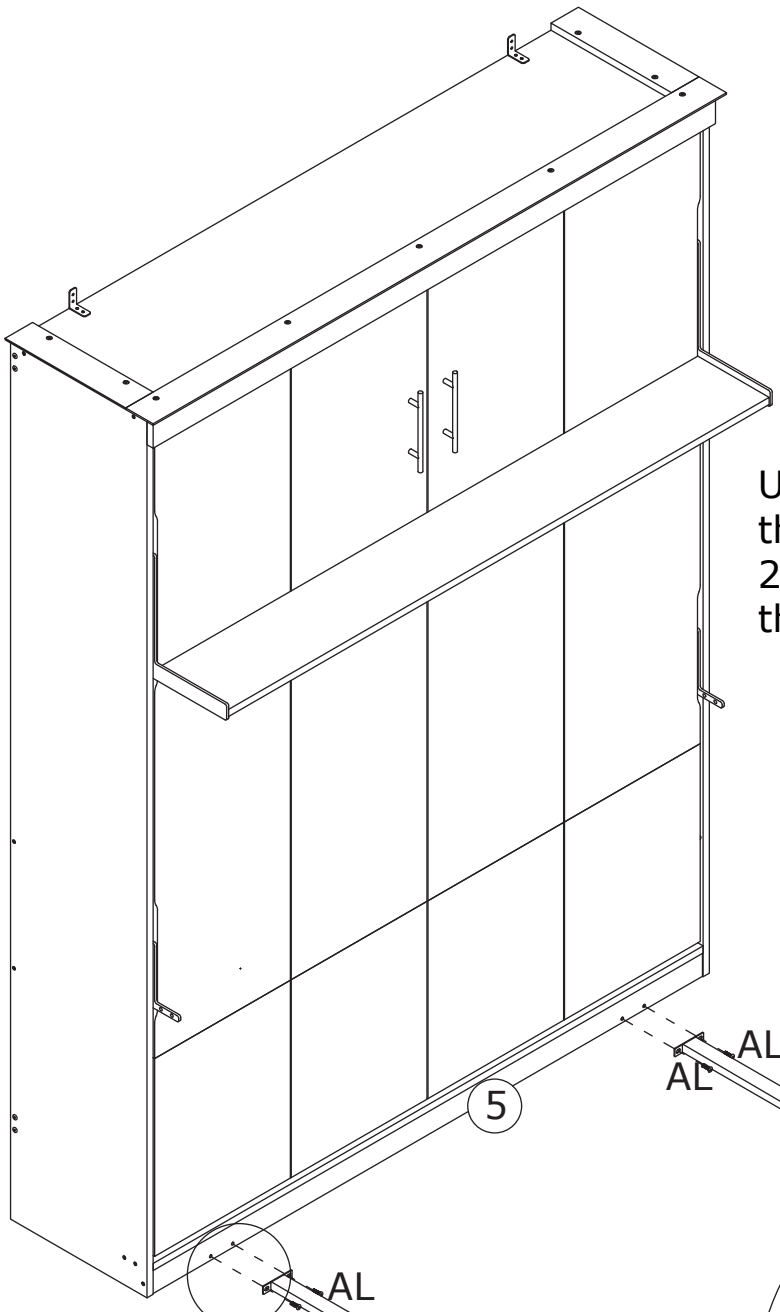

Use a wrench (AC) to remove the screw (AL) and component 25, and place the screw (AL) in the storage box.

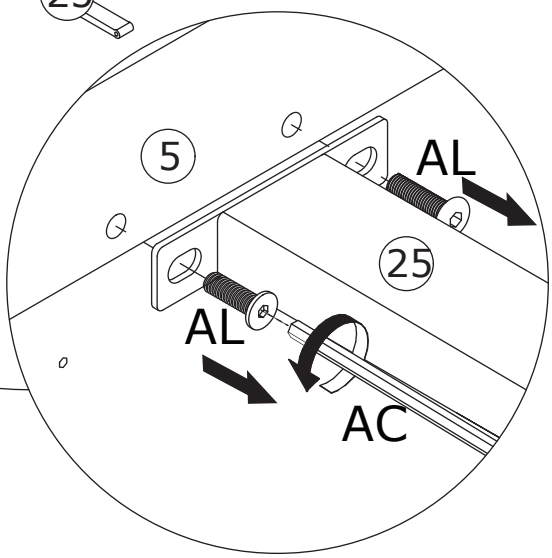

7

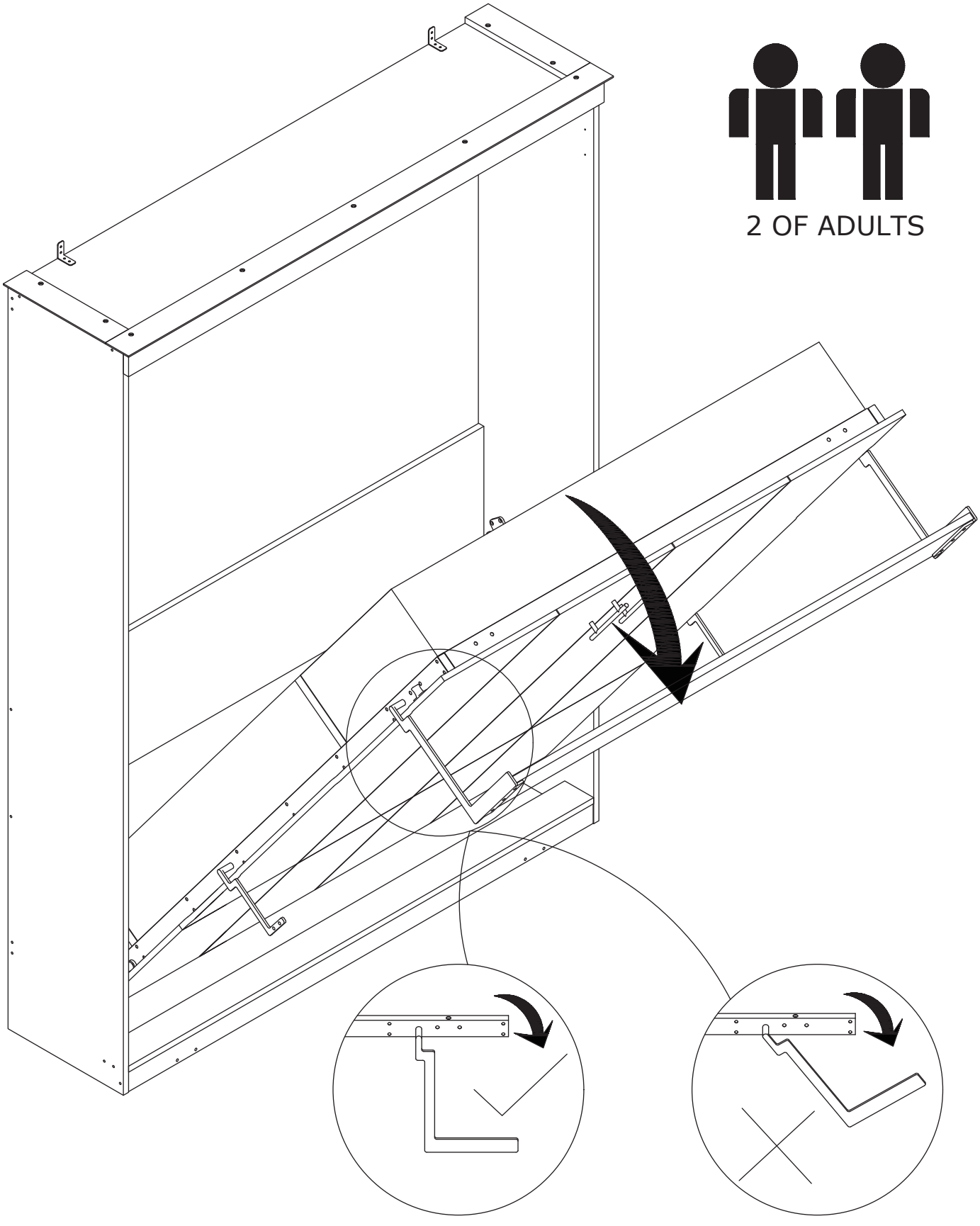

2 OF ADULTS

As shown in the figure, open the bed frame.
Caution: Be careful not to pinch your hands.

8

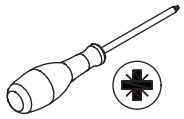

Place a heavy object weighing more than 20 kilograms on top of the bed frame to prevent it from springing back.

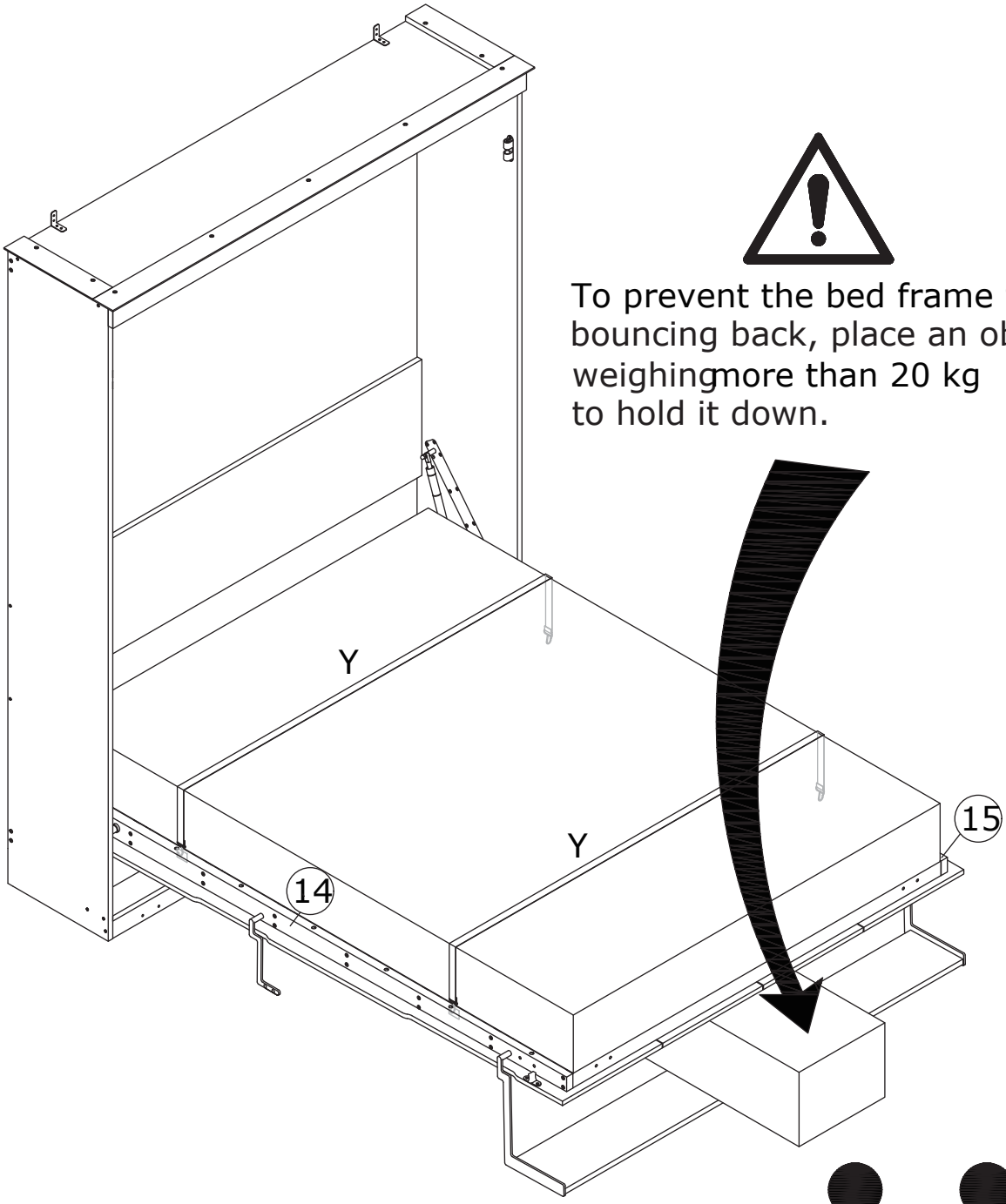

To prevent the bed frame from bouncing back, place an object weighing more than 20 kg on it to hold it down.

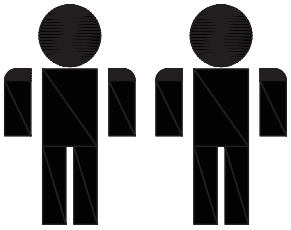

2 OF ADULTS

9

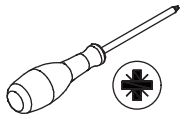

Remove part (Y) and place it in the storage bin.
Remove the mattress.

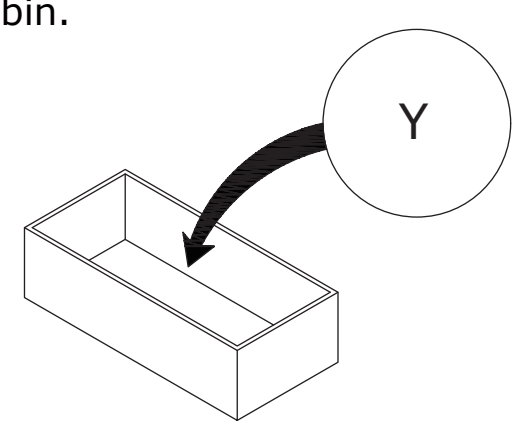

Storage box

When moving the object, guard against the rebound of the bed frame.

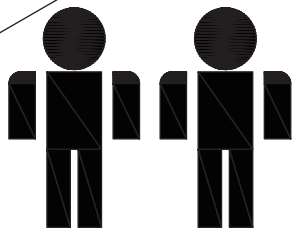

2 OF ADULTS

10

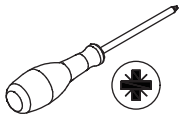

Remove the screw (E) and part (W-1) and place them in the storage box.

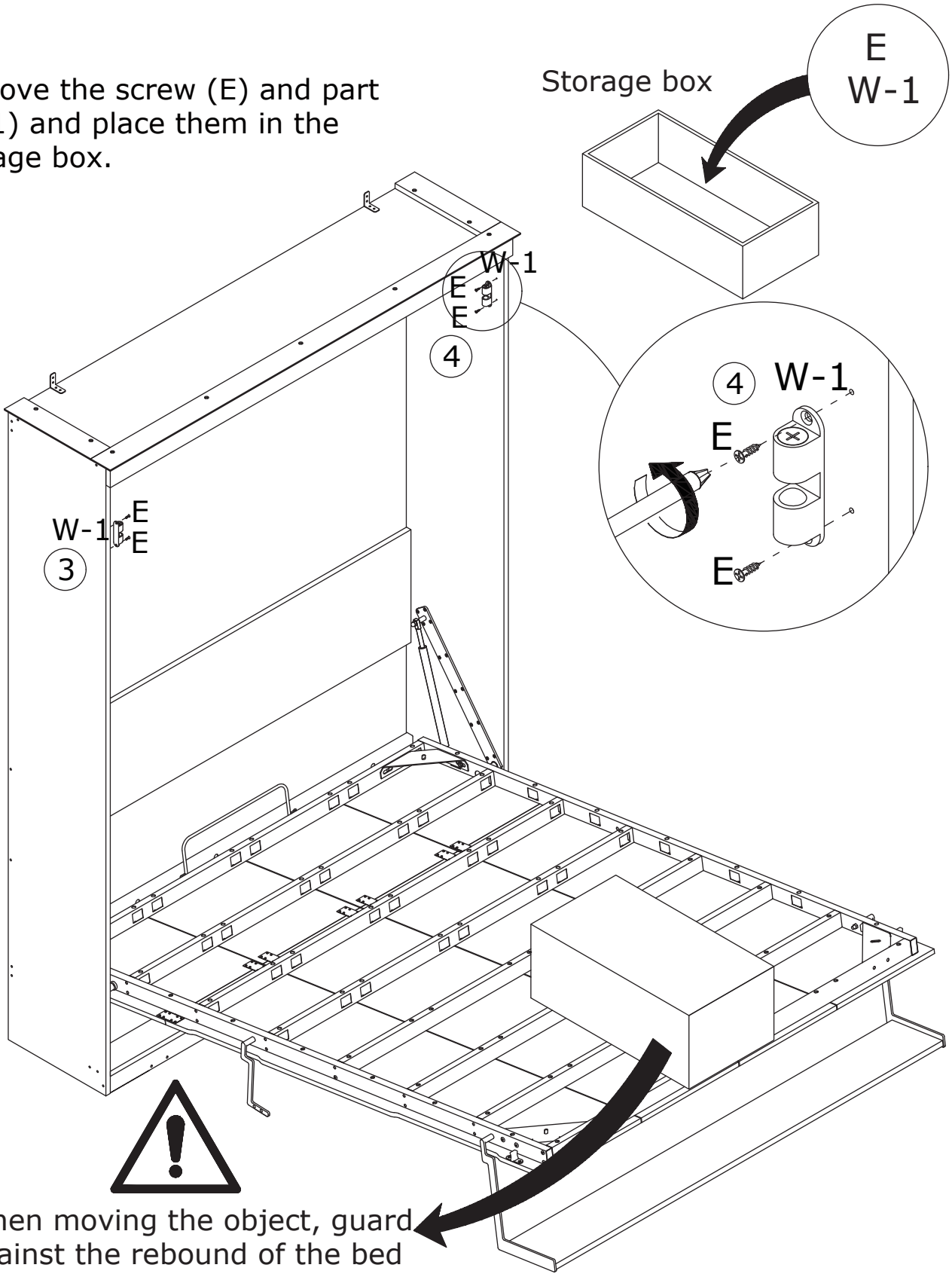

When moving the object, guard against the rebound of the bed frame.

11

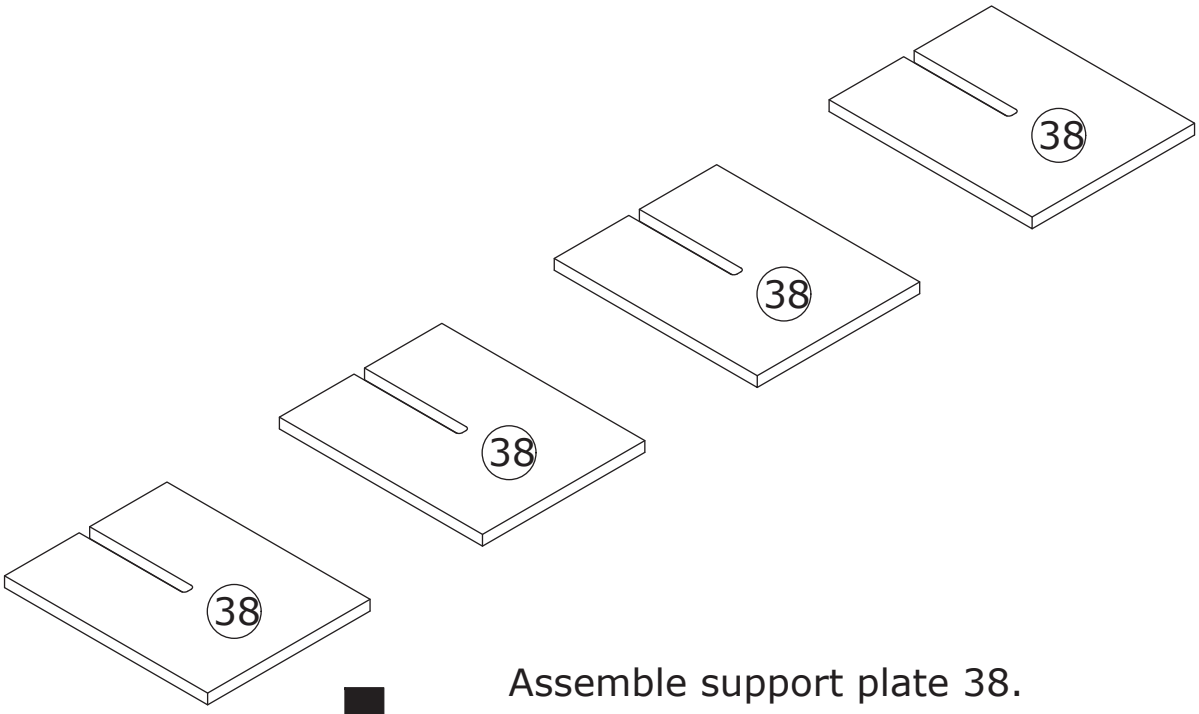

Assemble support plate 38.

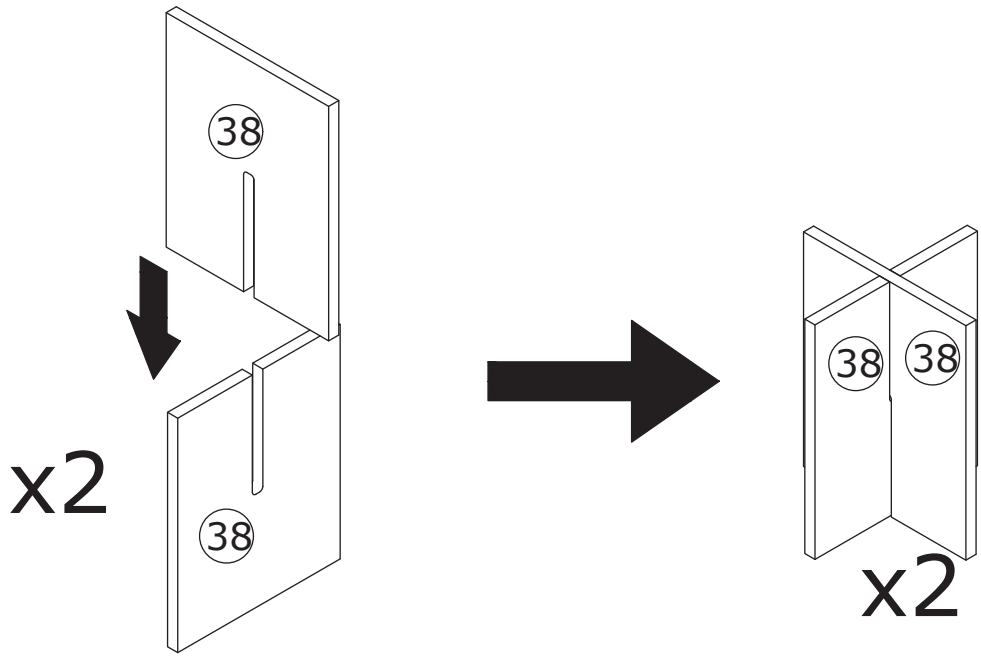

Panel 38 is only used as an auxiliary plate, does not participate in cabinet assembly, and can be disposed of as you wish after use.

12

AC x 1

M4

Use the fully assembled support plate (38) as a support to remove the screws (G), panel 10, and panel 37, and place the screws (G) in the storage box.

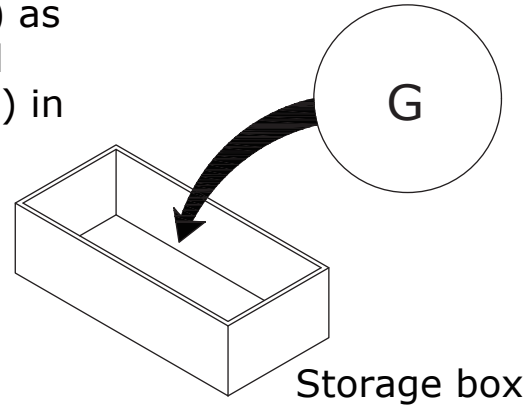

Storage box

Auxiliary Panel 38 serves to support Panel 10 and 37.

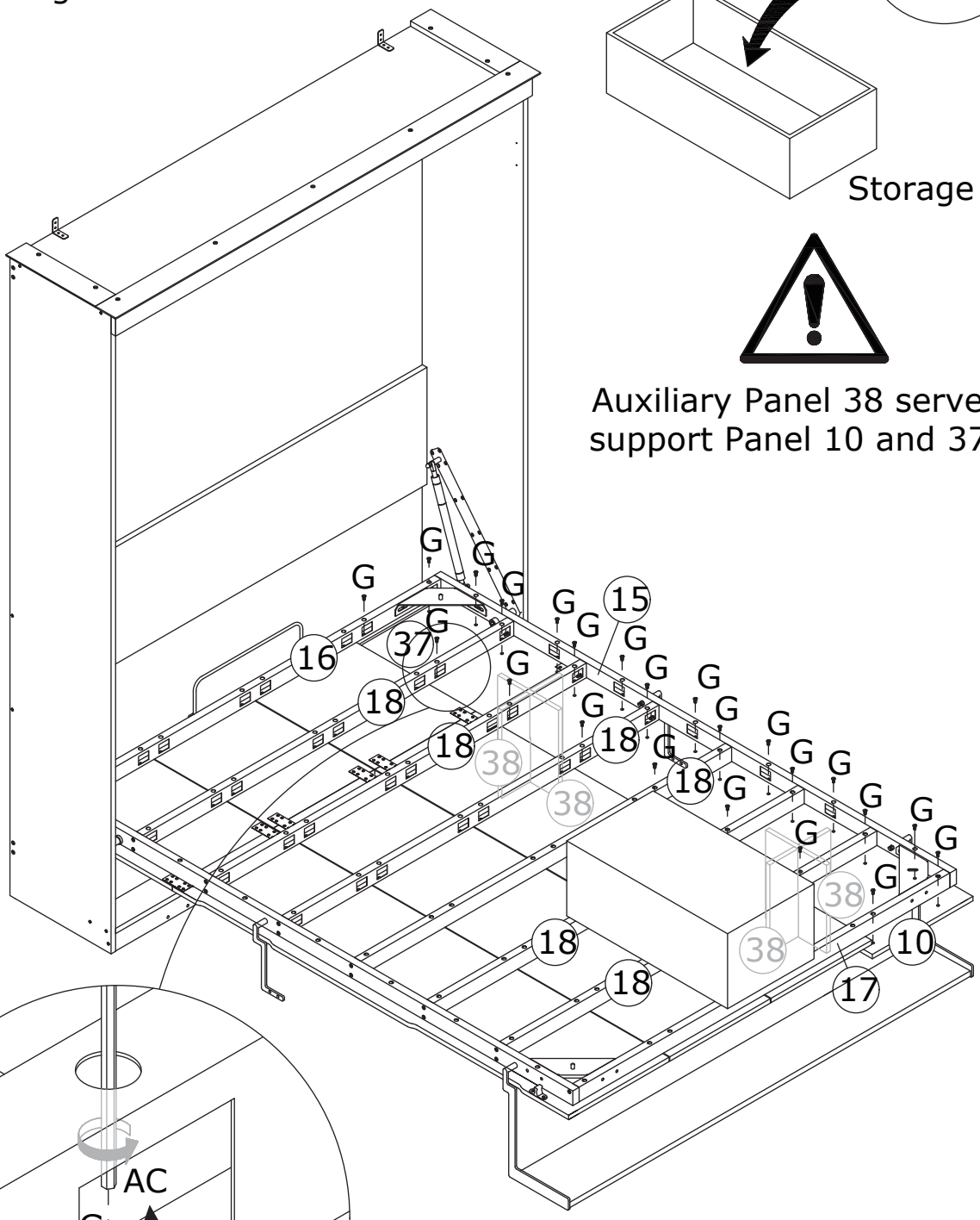

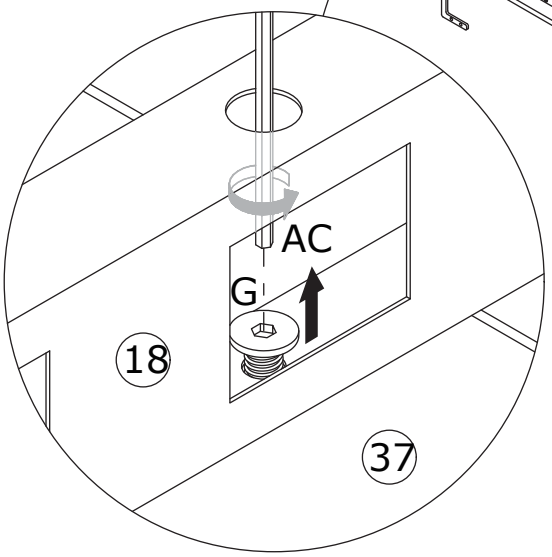

13

AC x 1

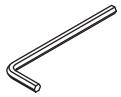

M4

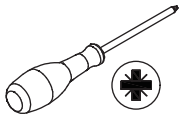

Use the fully assembled support plate (38) as a support, remove the screws (G) and panels 7 and 34, and place the screws (G) in the storage box.

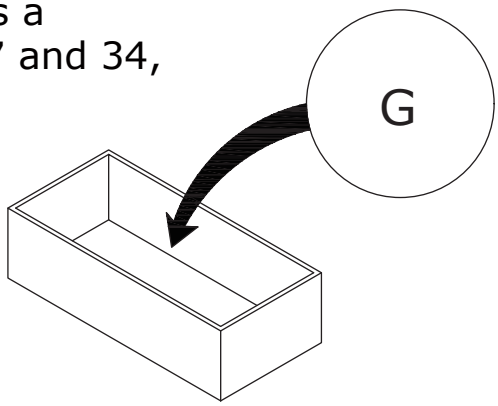

Storage box



Auxiliary Panel 38 serves to support Panel 7 and 34.

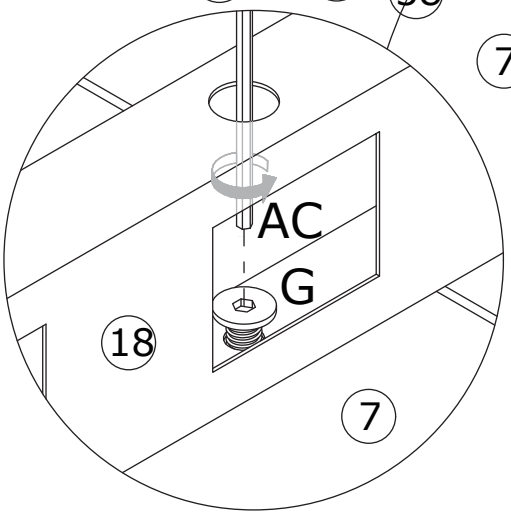

14

Fold the bed frame down and push it toward the wall by the appropriate distance. As you fold the bed frame down, rotate parts (19), (20), (27), and (28) downward by the appropriate distance. **Caution: Be careful not to pinch your hands.**

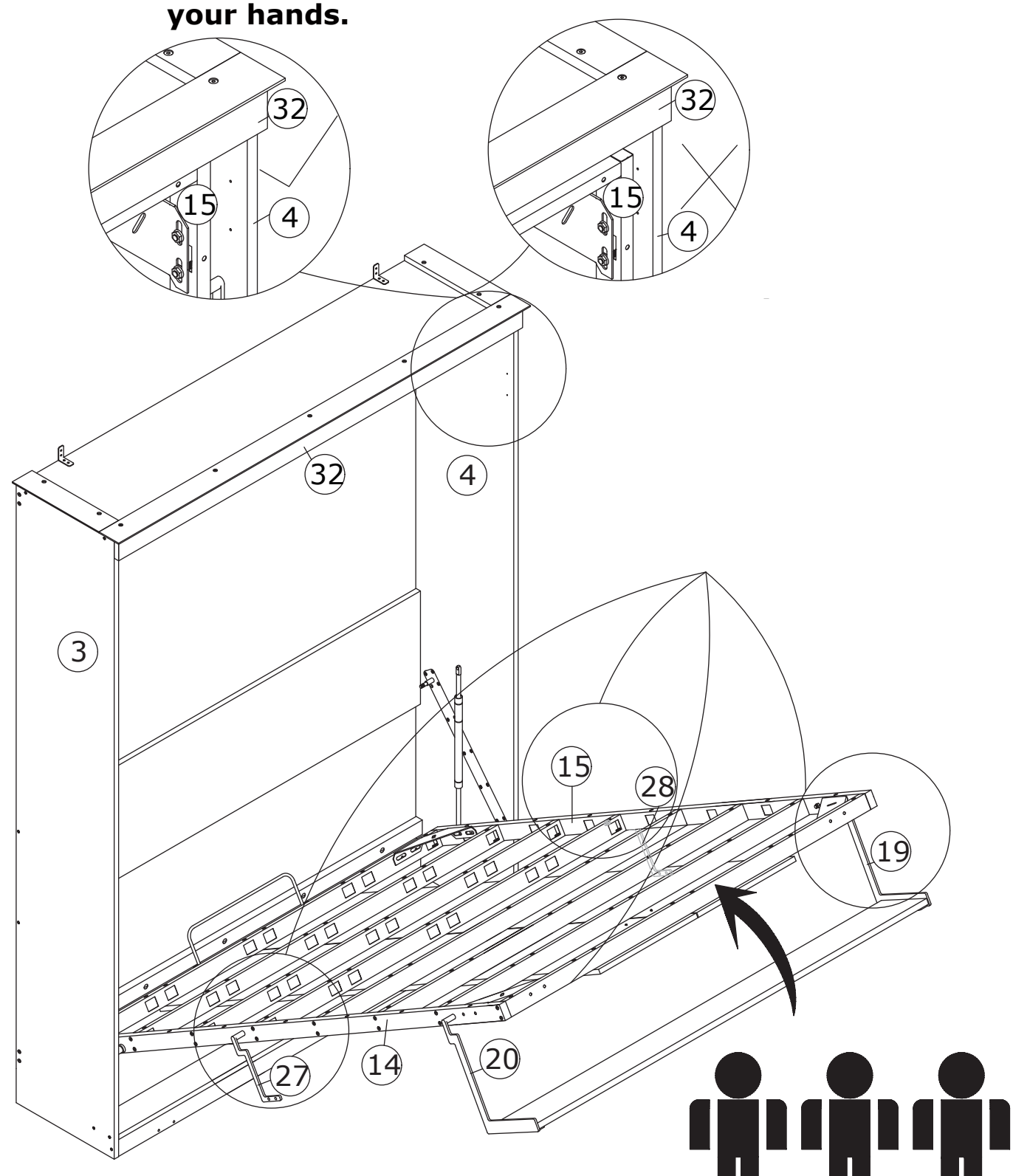

3 OF ADULTS

15

AF x 1

M8

Use a wrench (AF) to remove the nut (T) and the component (R) from the connection end of component (13), and place the nut (T) in the storage box.

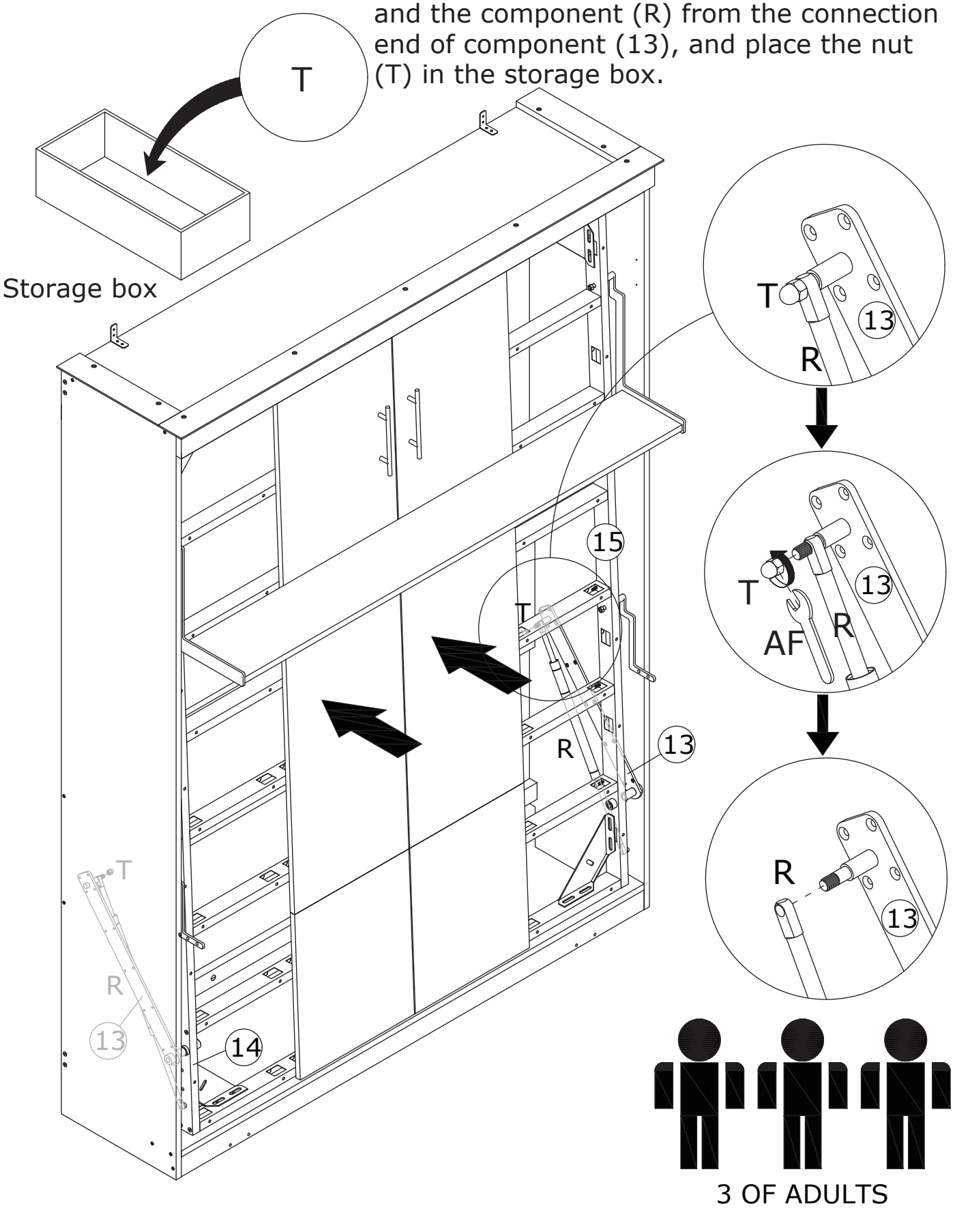

16

Open the bed frame and flip down parts (19), (20), (27), and (28).
Caution: Be careful not to pinch your fingers.

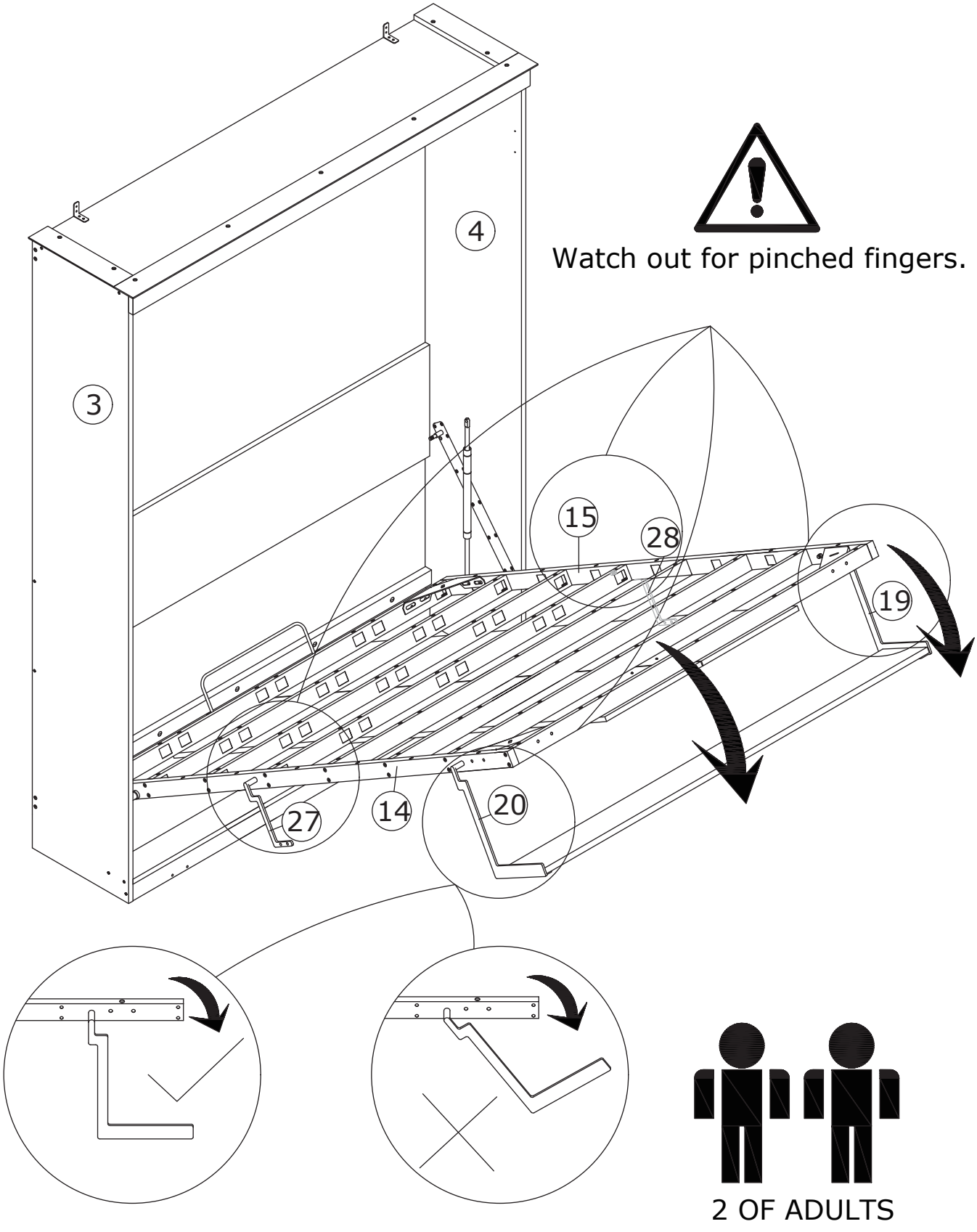

Watch out for pinched fingers.

2 OF ADULTS

17

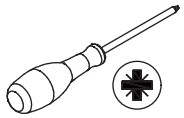

Remove the handle (U) and screws (V) and place them in the storage box.

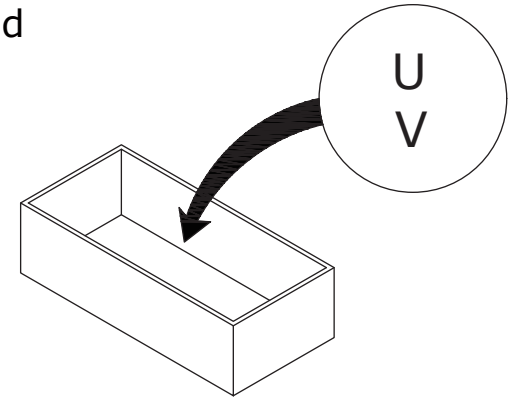

Storage box

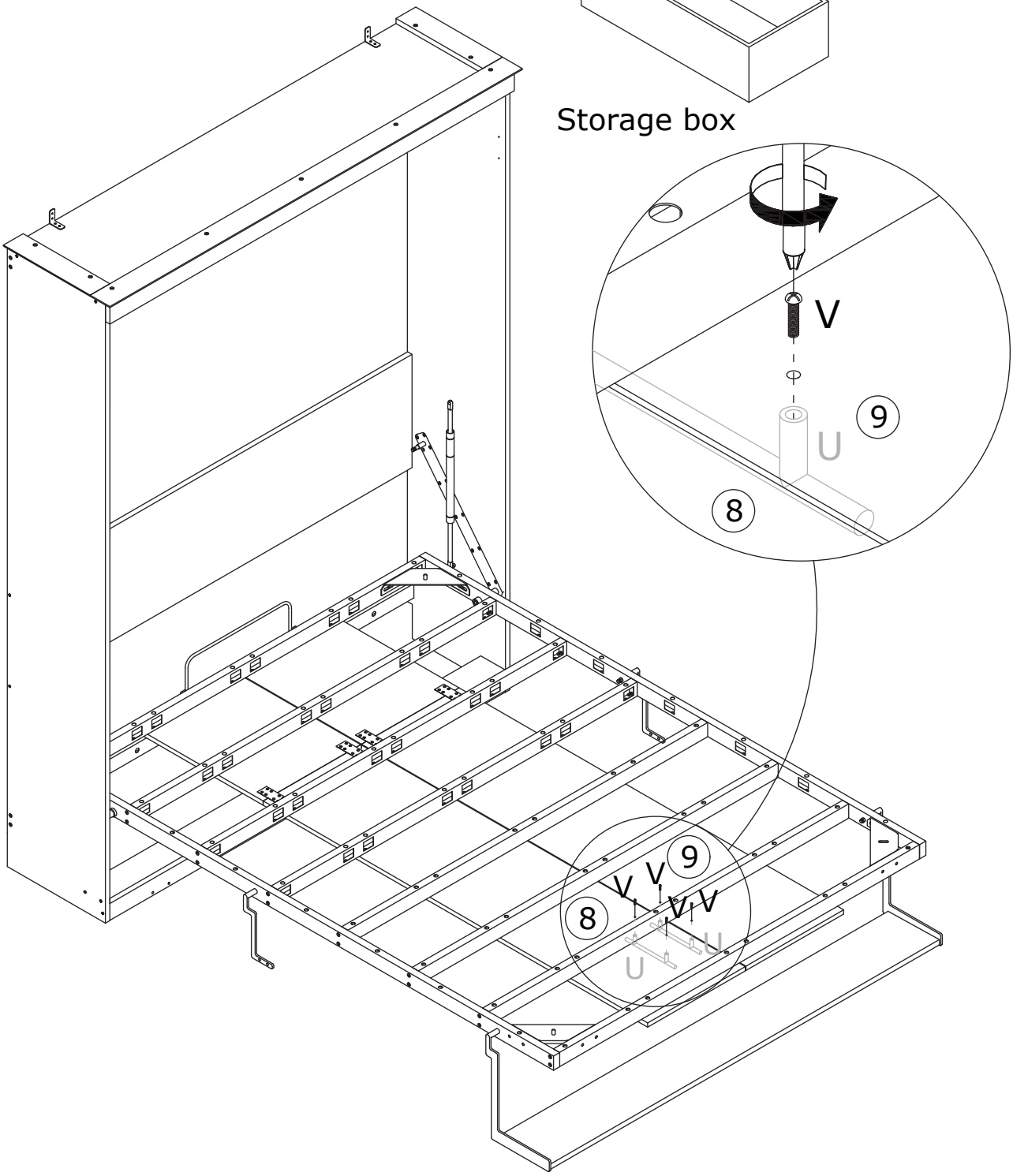

18

AD x 1

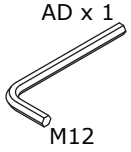

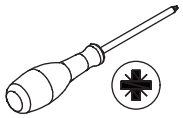

Use a wrench (AD) to remove part (23) and place it in the storage box.

Note: Have two or more people work together to support the bed frame while removing part (23) to prevent the bed frame from falling after part (23) is removed.

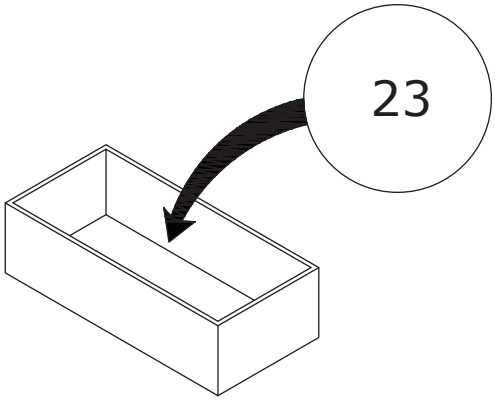

Storage box

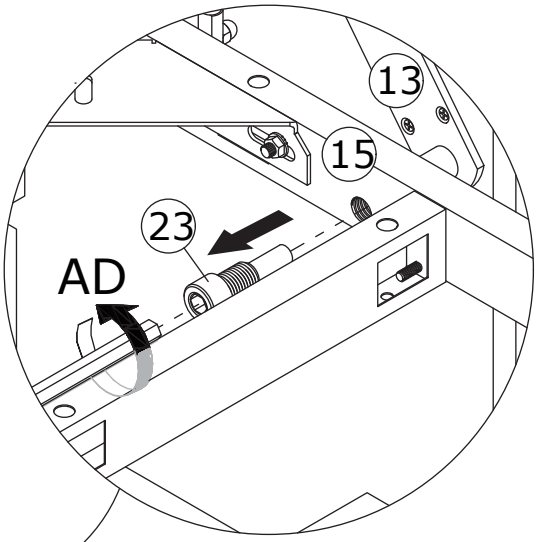

2 OF ADULTS

19

Move the bed frame out of the main unit and rotate parts (19), (20), (27), and (28) upward.
Caution: Be careful not to pinch your hands.

Keep hands away from this area when lifting the bed frame to avoid pinching .

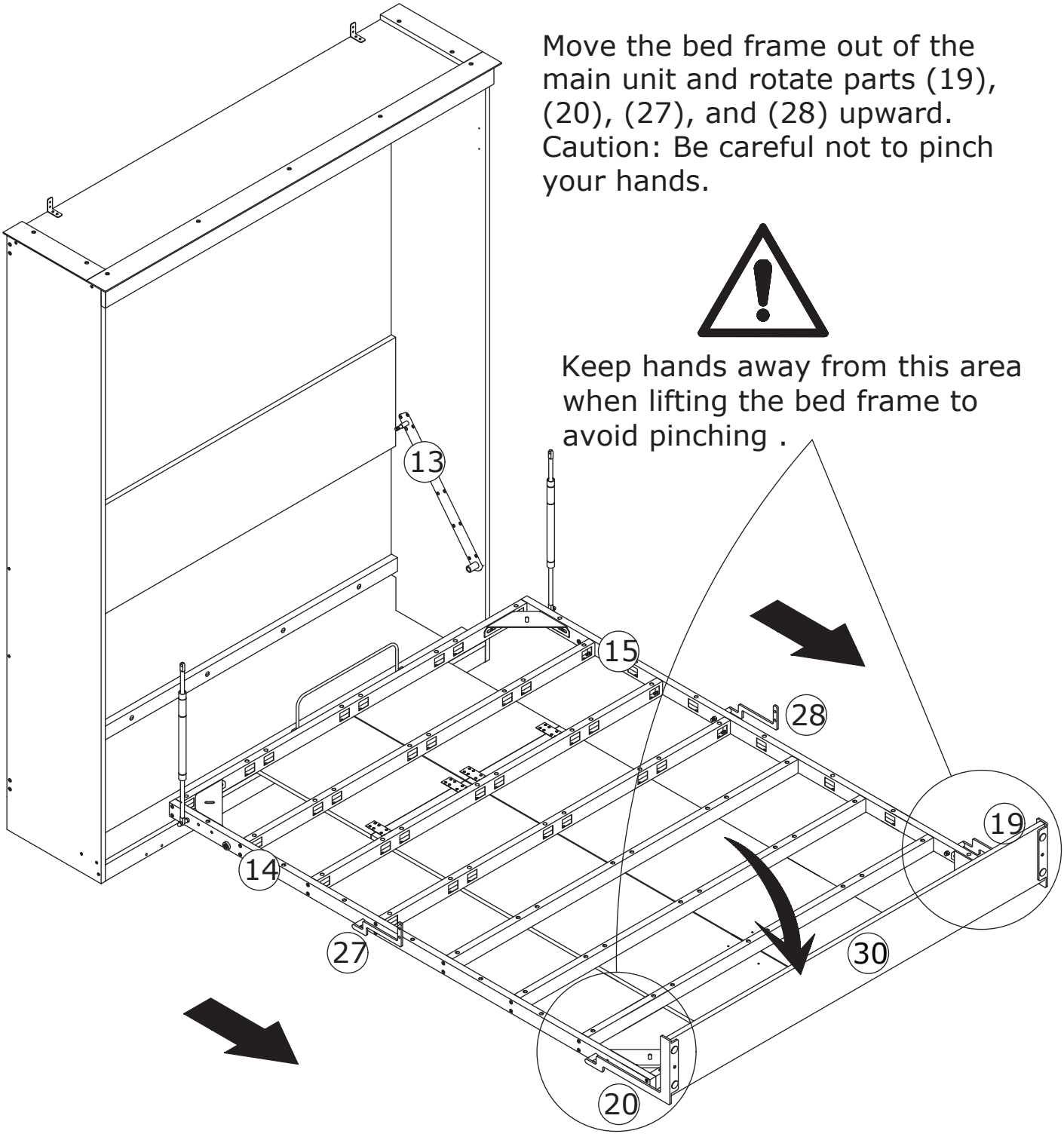



3 OF ADULTS

20

AF x 1

M8

Use a wrench (AF) to remove the nut (T) and the part (R), and place them in the storage box.

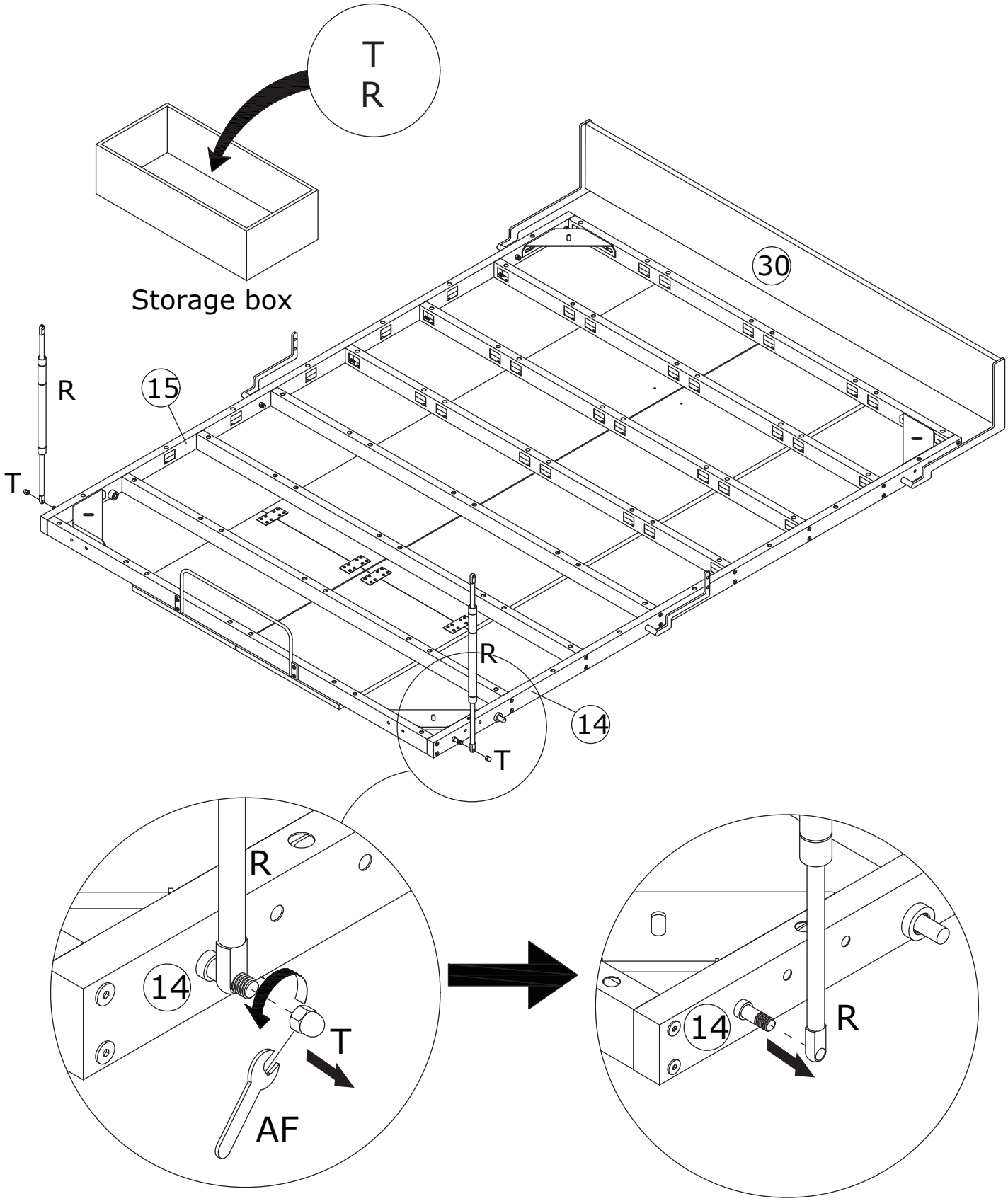

21

Remove the anti-slip mat Z and place it in the storage compartment.

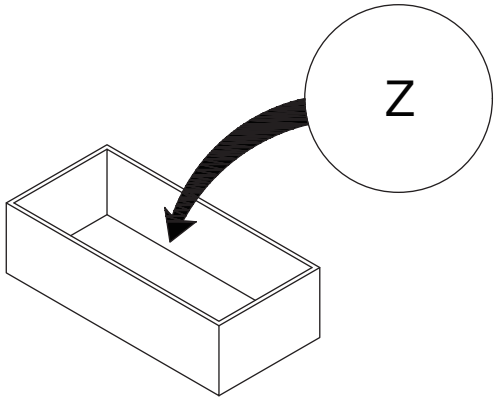

Storage box

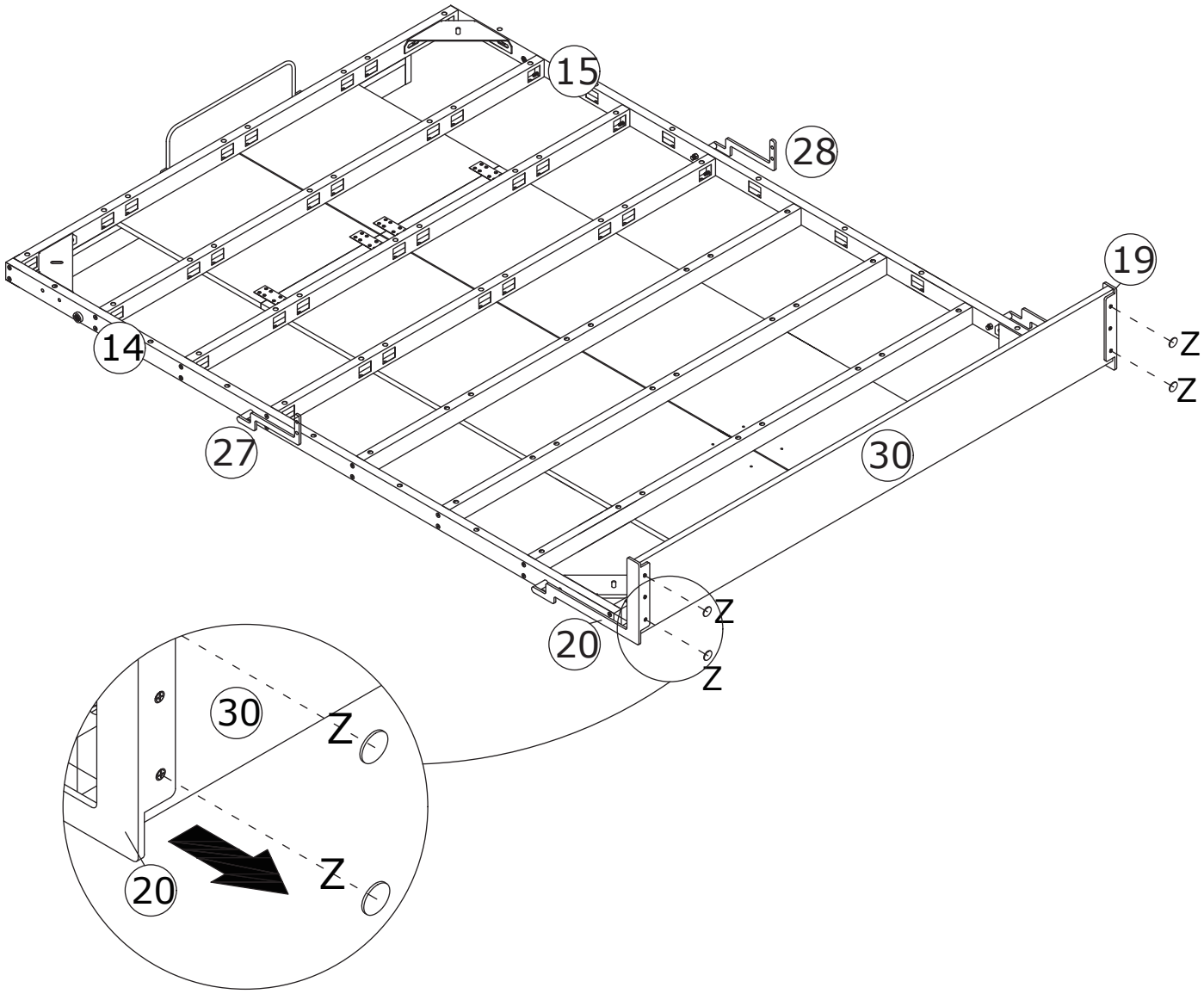

22

Remove the screws (AH) and place them in the storage box.

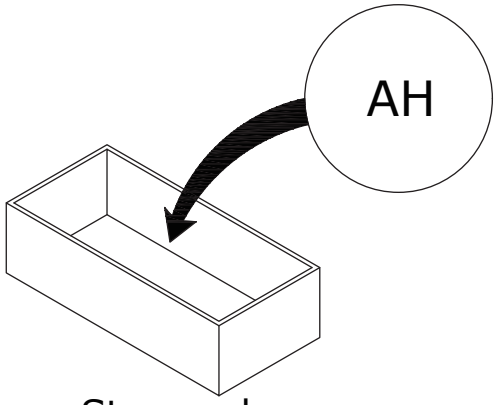

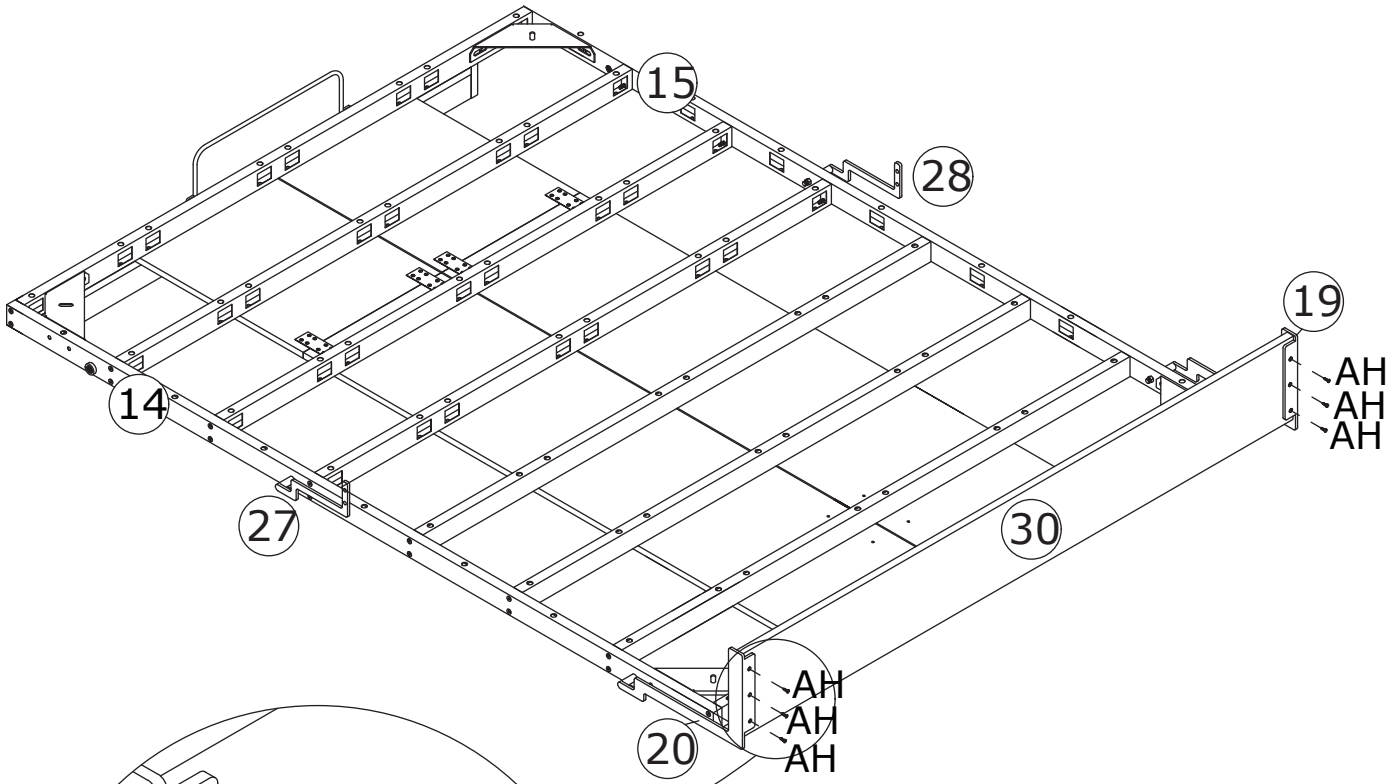

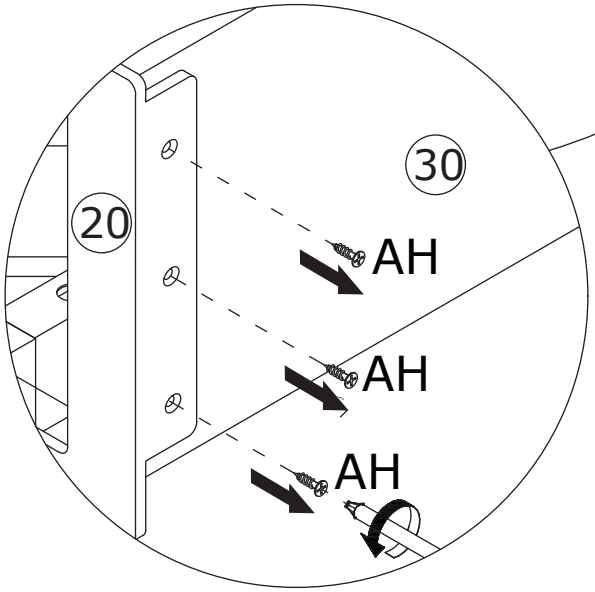

23

AF x 1

M8

Use a wrench (AF) to remove the nut (S), part (19), part (20), part (27), and part (28), and place the nut (S) and parts (19), (20), (27), and (28) in the storage box.

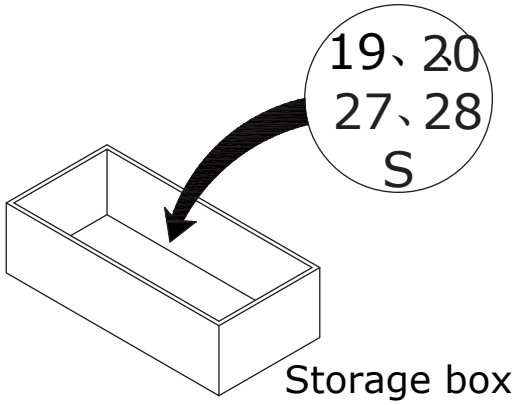

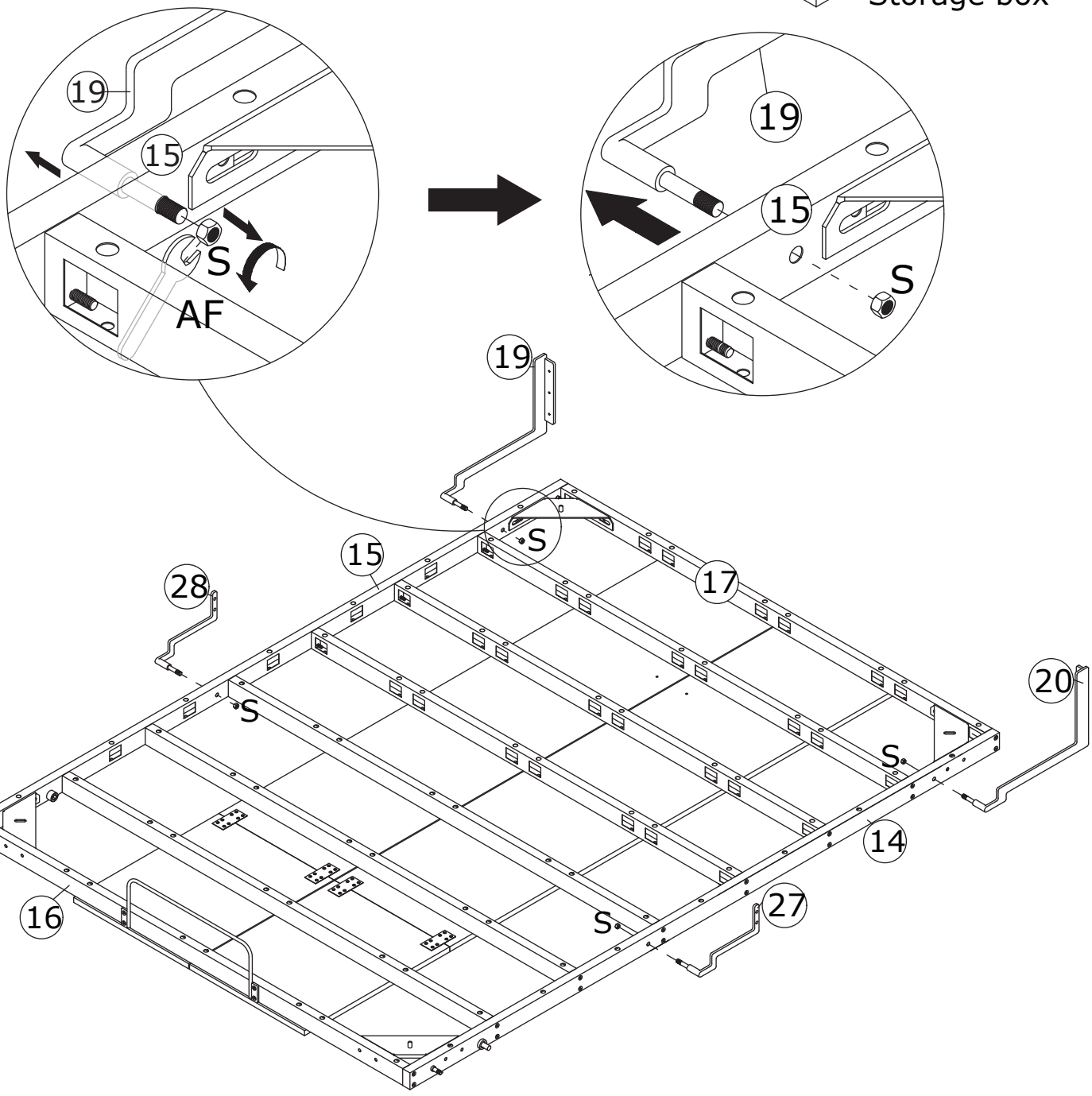

24

AE x 1	AF x 1	
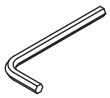 M5	 M8	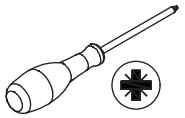

Use the wrench (AE) and the wrench (AF) to remove the screw (AJ), nut (Q), and part (N), and place them in the storage box.

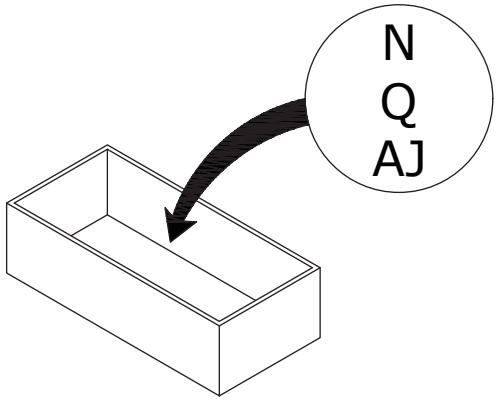

Storage box

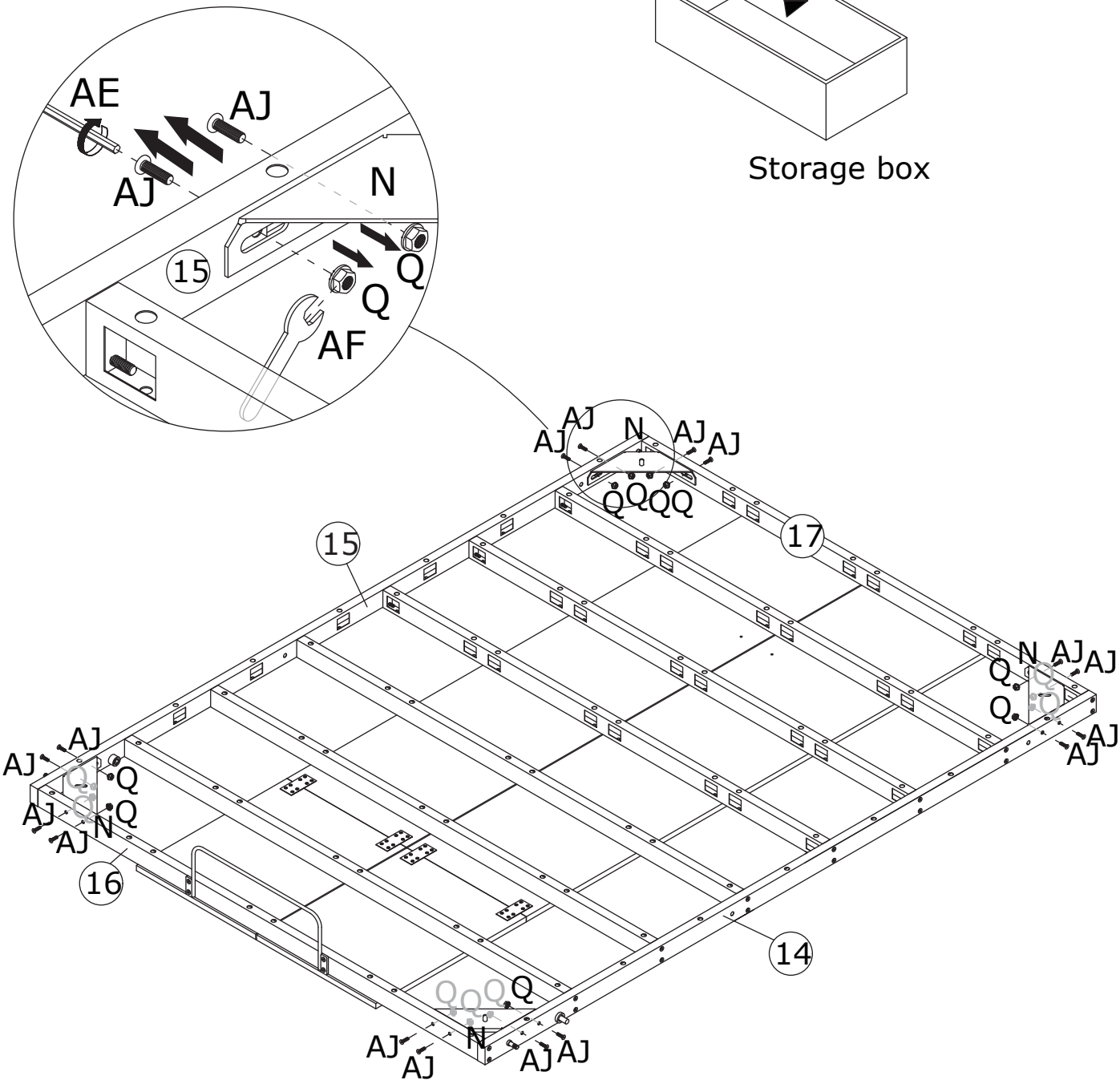

25

AC x 1

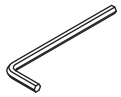

M4

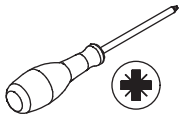

Use a wrench (AC) to remove the screw (L) and part (22), and place the screw (L) and part (22) in the storage box.

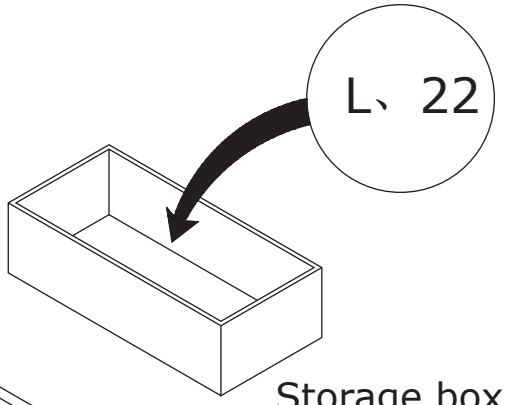

Storage box

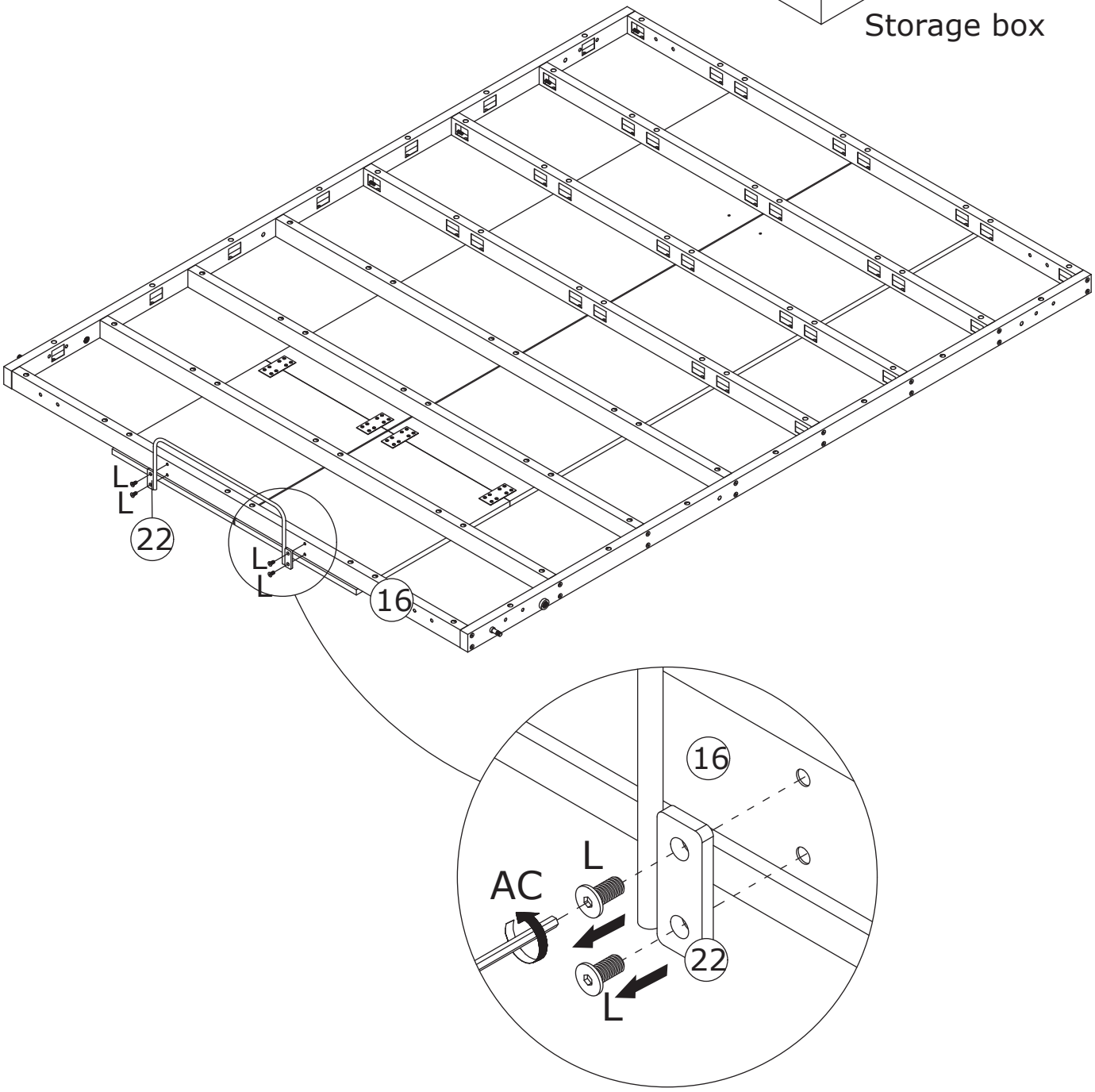

26

AC x 1

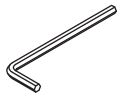

M4

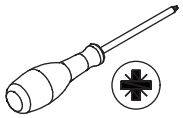

Use a wrench (AC) to remove the screws (G), Panel 8, Panel 9, Panel 35, and Panel 36 from the bed frame, and place the screws (G) in the storage box.

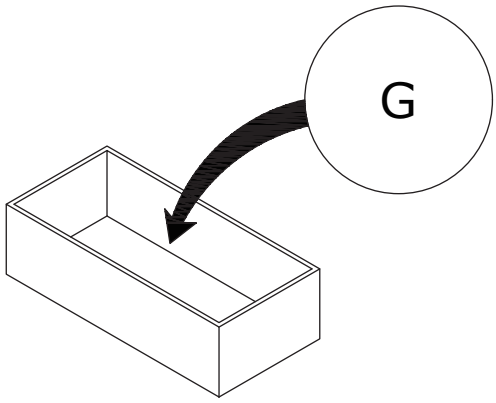

Storage box

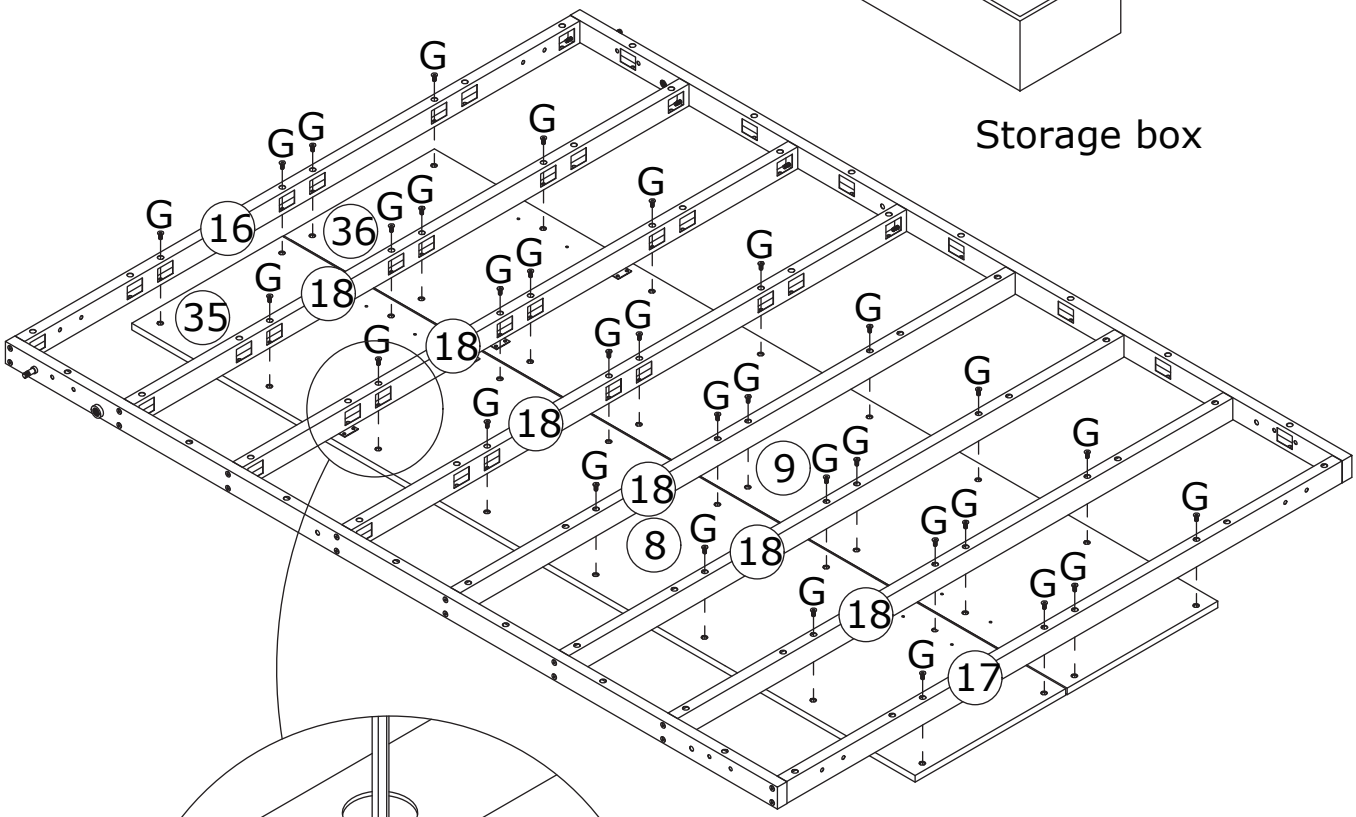

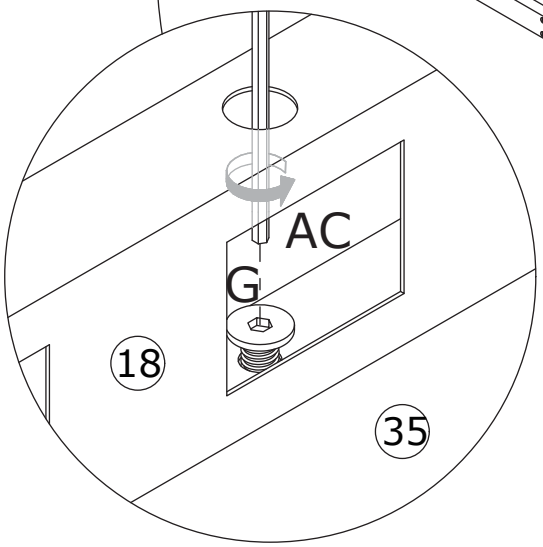

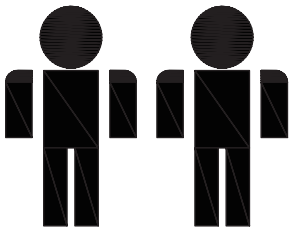

2 OF ADULTS

27



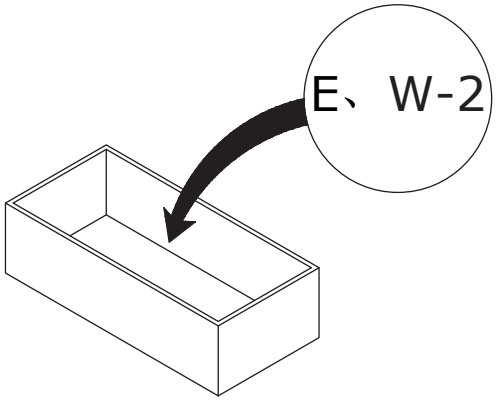

Storage box

Remove the screw (E) and part (W-2),
and place them in the storage box.

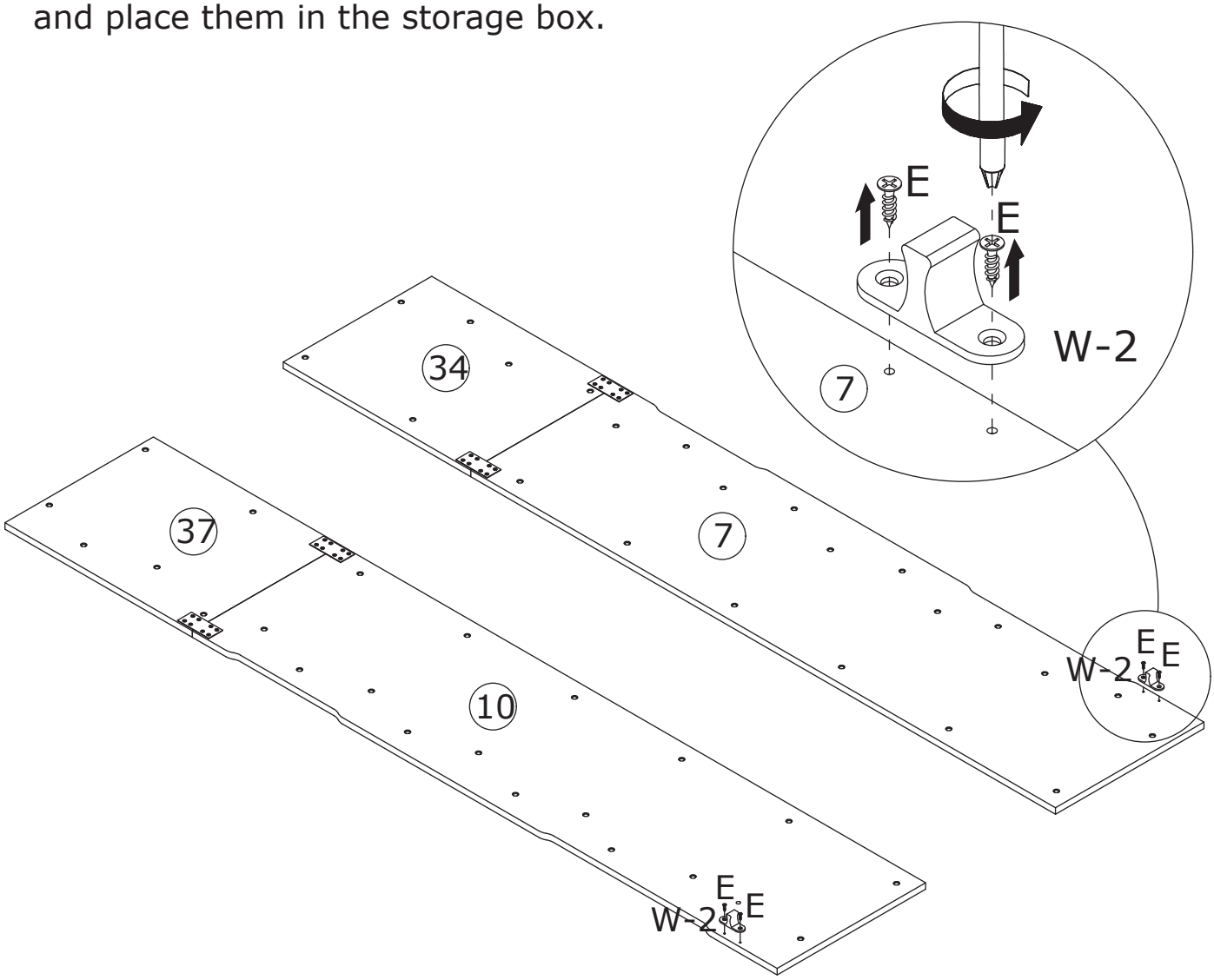

28

Remove the screw (E) and the part (AQ), and place them in the storage box.

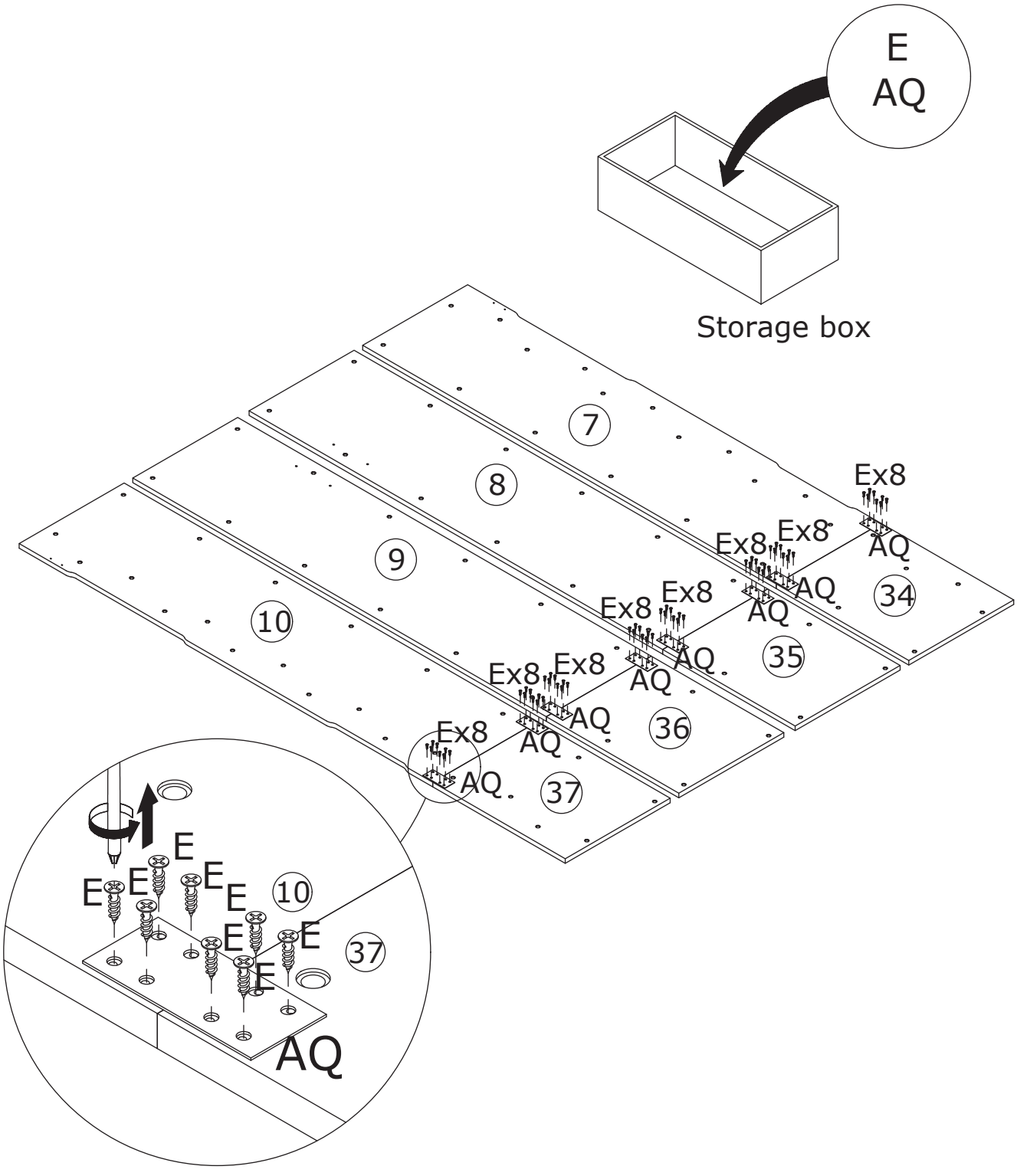

29

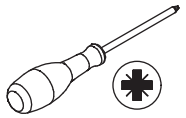

Remove the wooden dowel (C) and place it in the storage box.

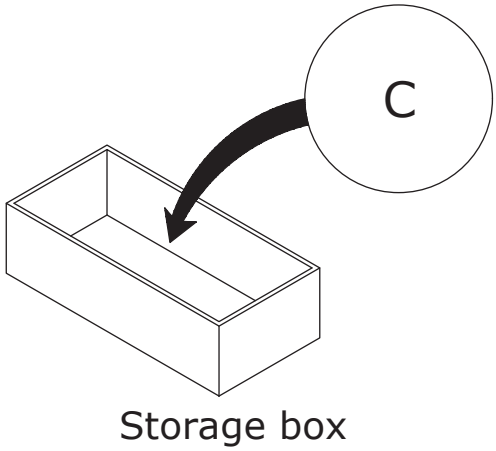

Storage box

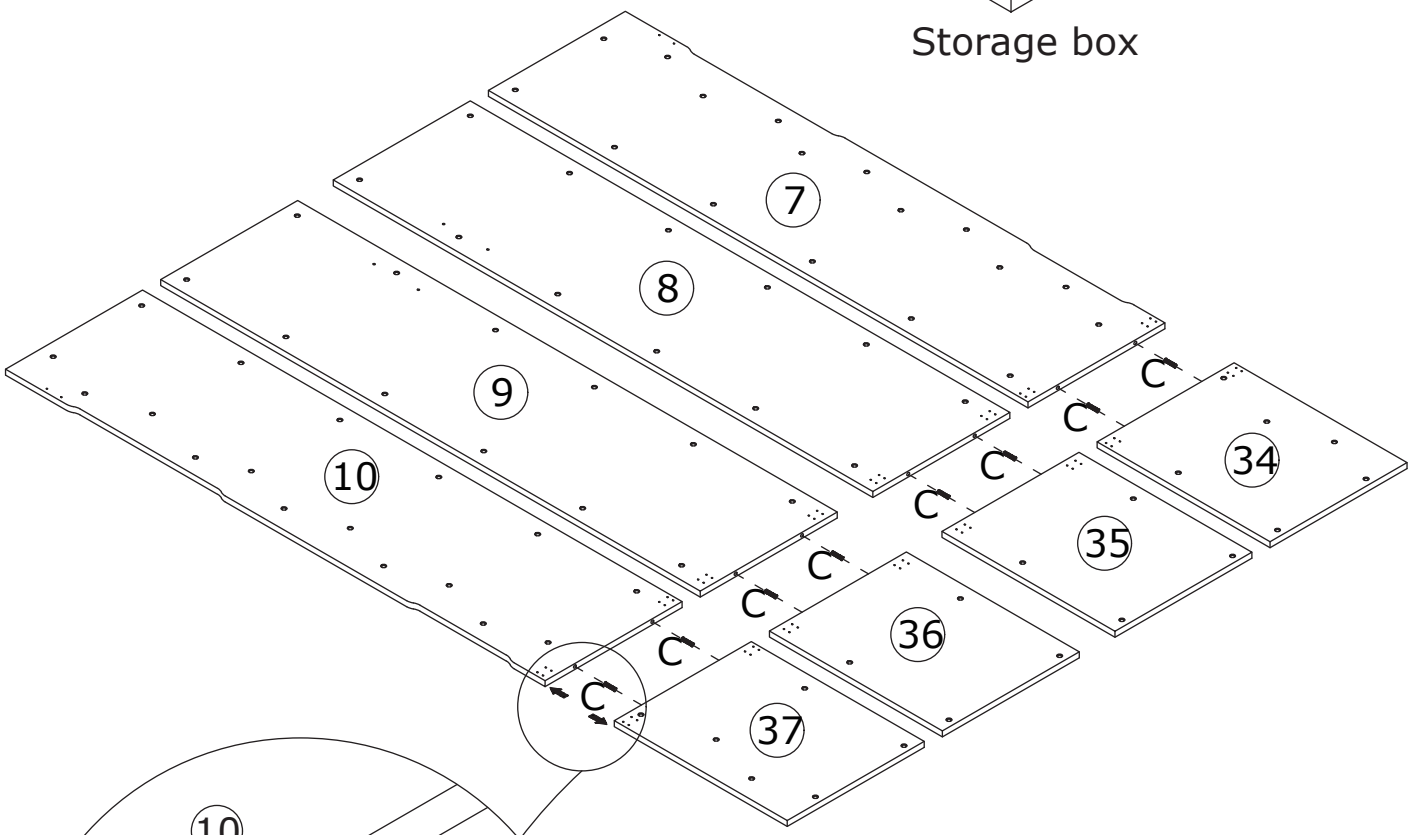

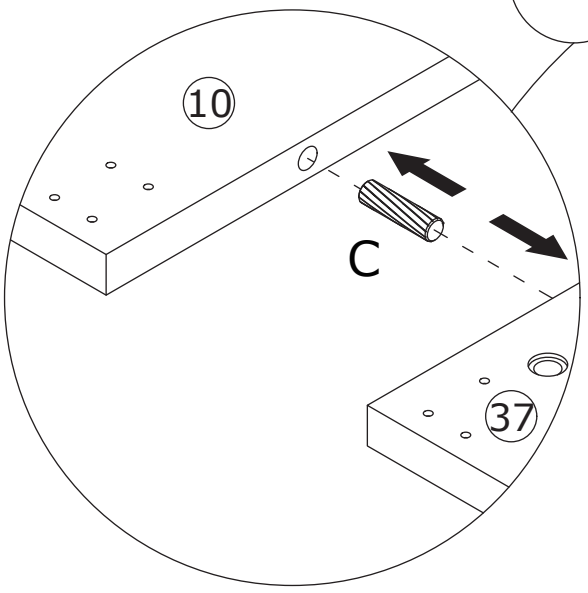

30

AC x 1

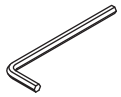

M4

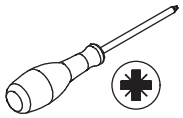

Use a wrench (AC) to remove the screw (M) and component (15), and place the screw (M) in the storage box.

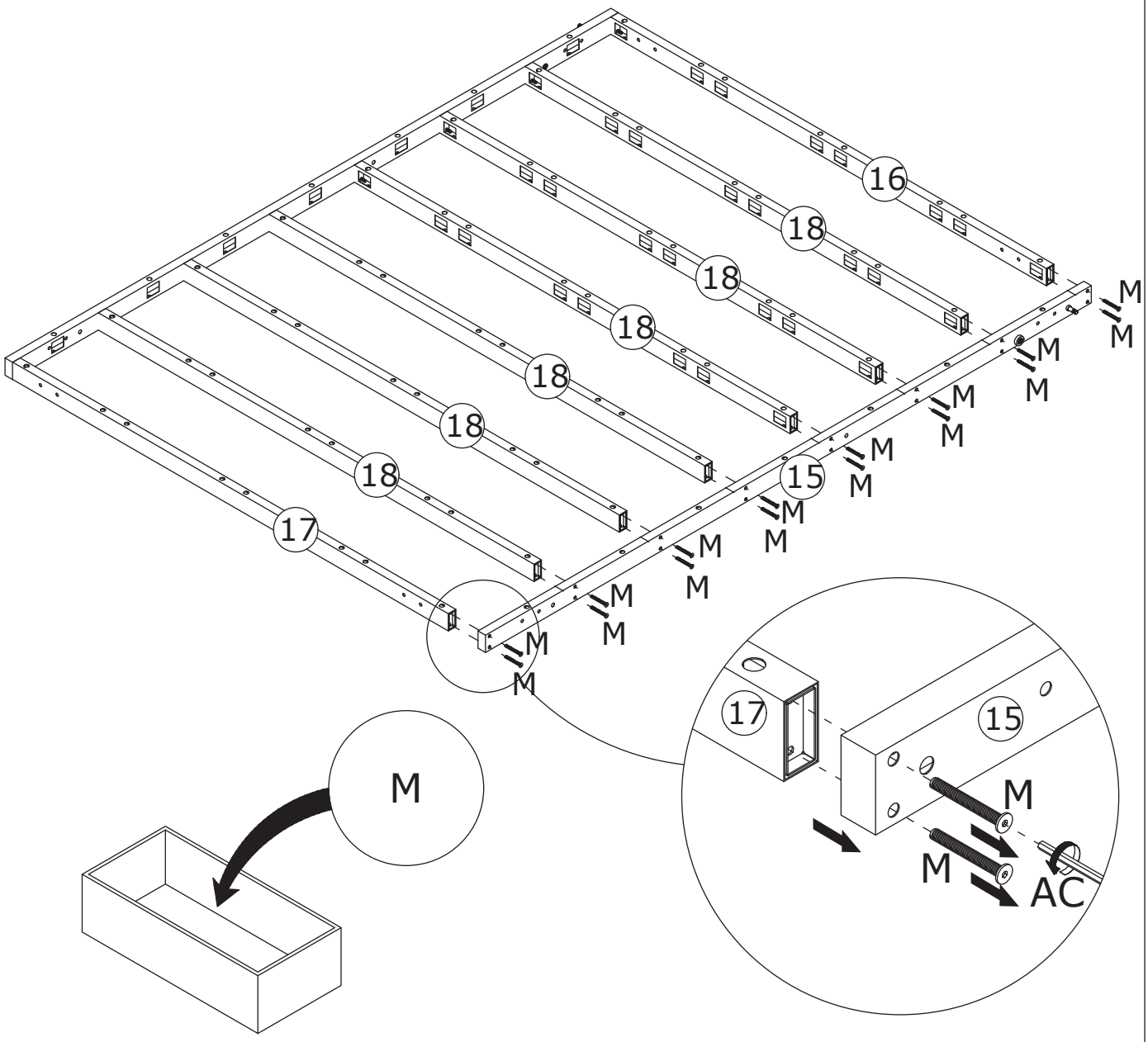

Storage box

31

AC x 1

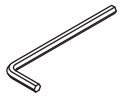

M4

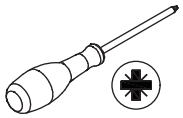

Use a wrench (AC) to remove the screw (M) and component (14), and place the screw (M) in the storage box.

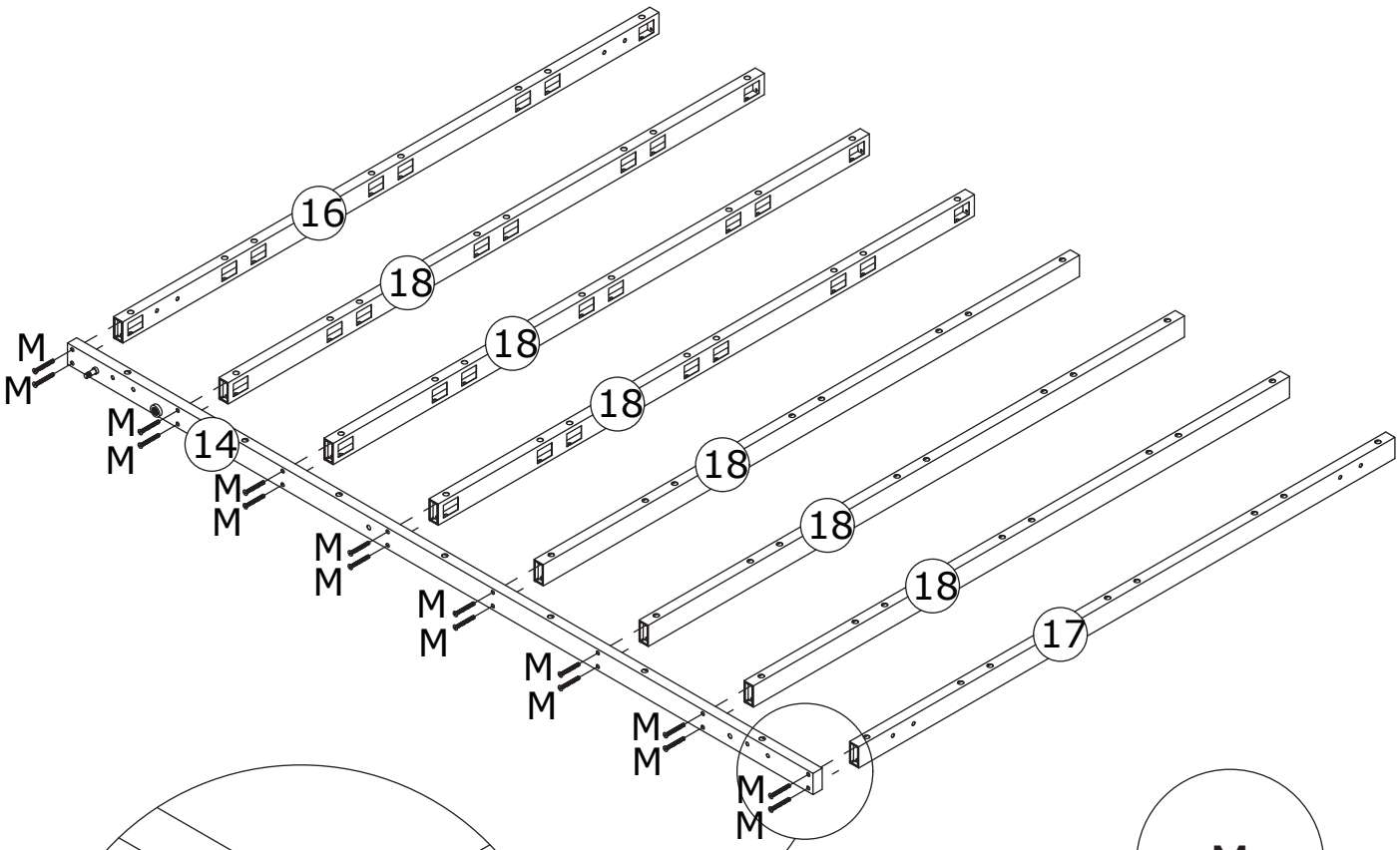

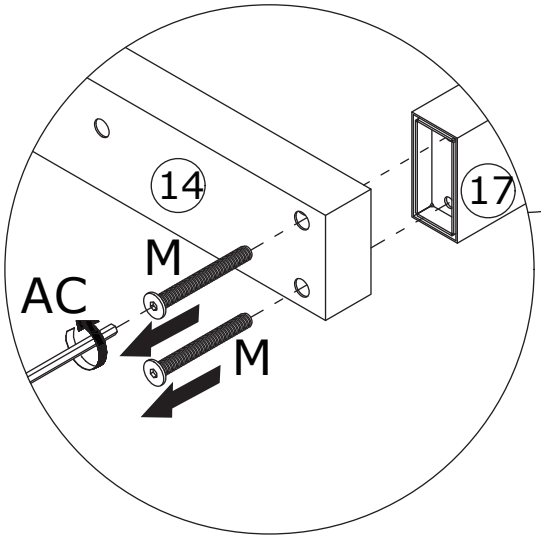

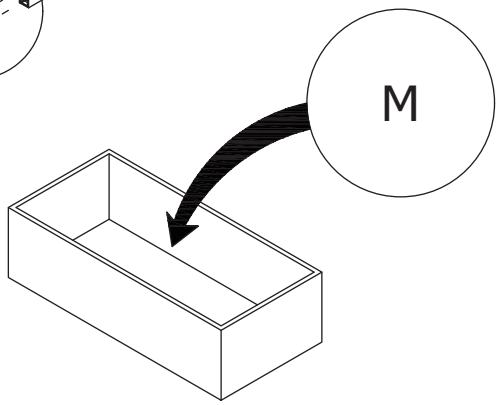

Storage box

If there is a keel inside the wall, please select Option A
If there is no keel inside the wall, please select Option B.

Option A

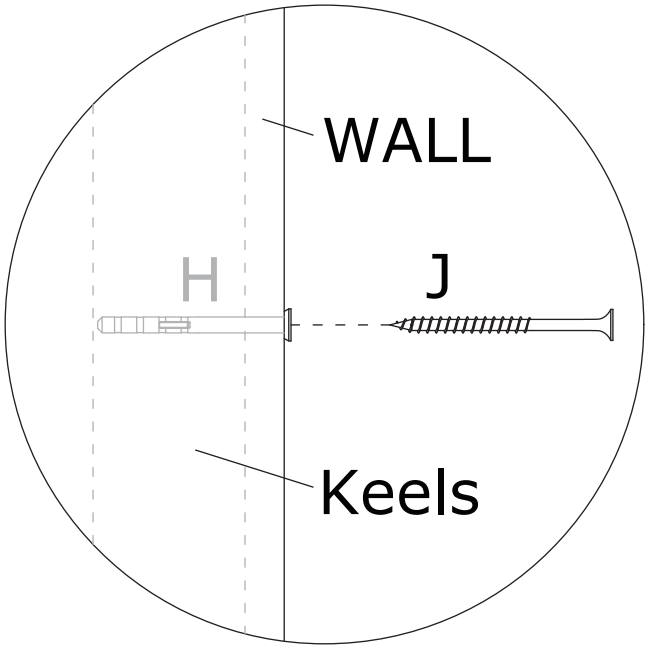

Option B

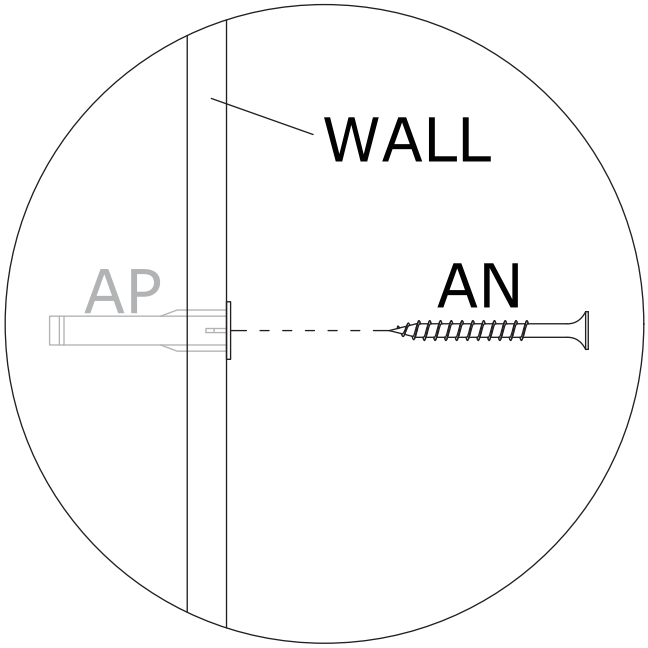

32

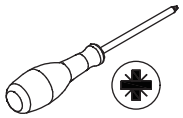

Remove the anti-tip device and place screw (J) or screw (AN) in the storage compartment.

J/AN

Storage box

Option A

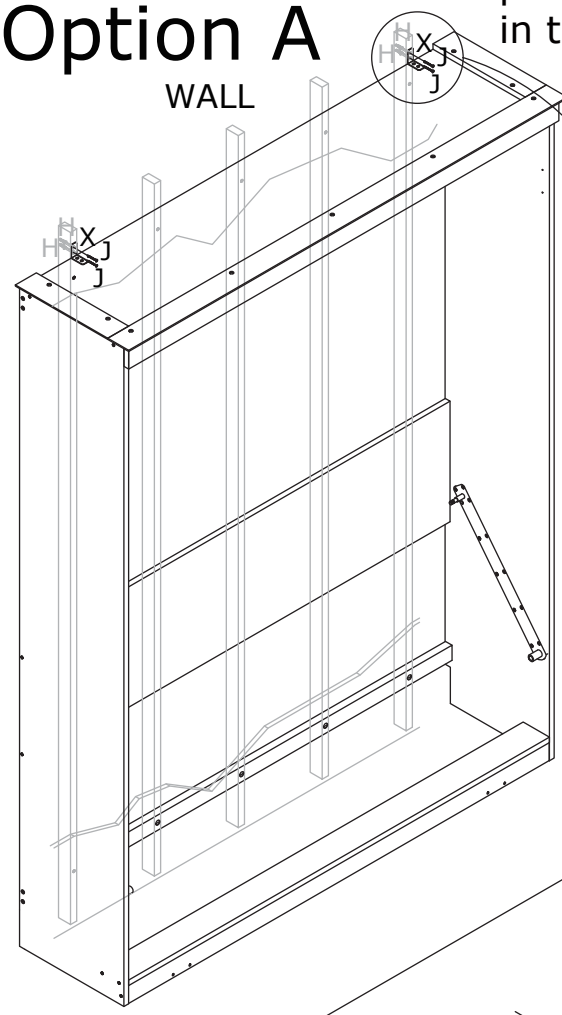

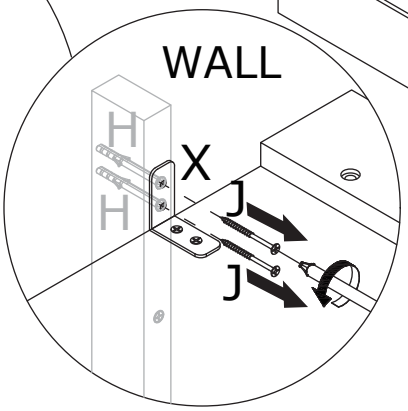

Option B

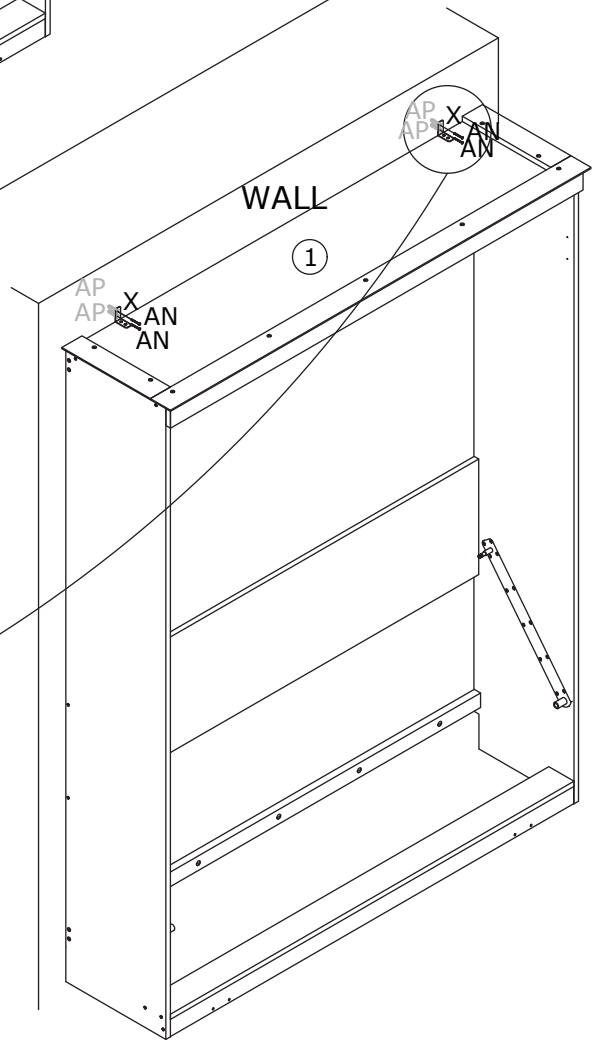

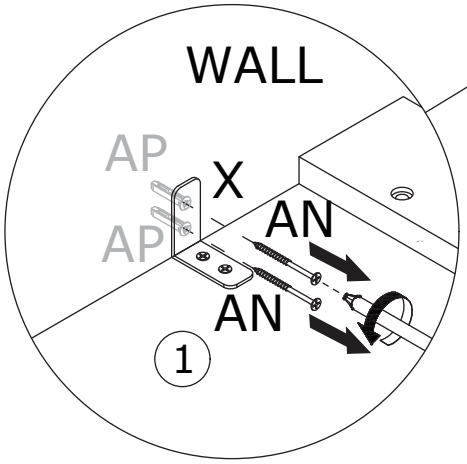

33

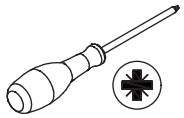

Remove the screw (E) and the part (X), and place them in the storage box.

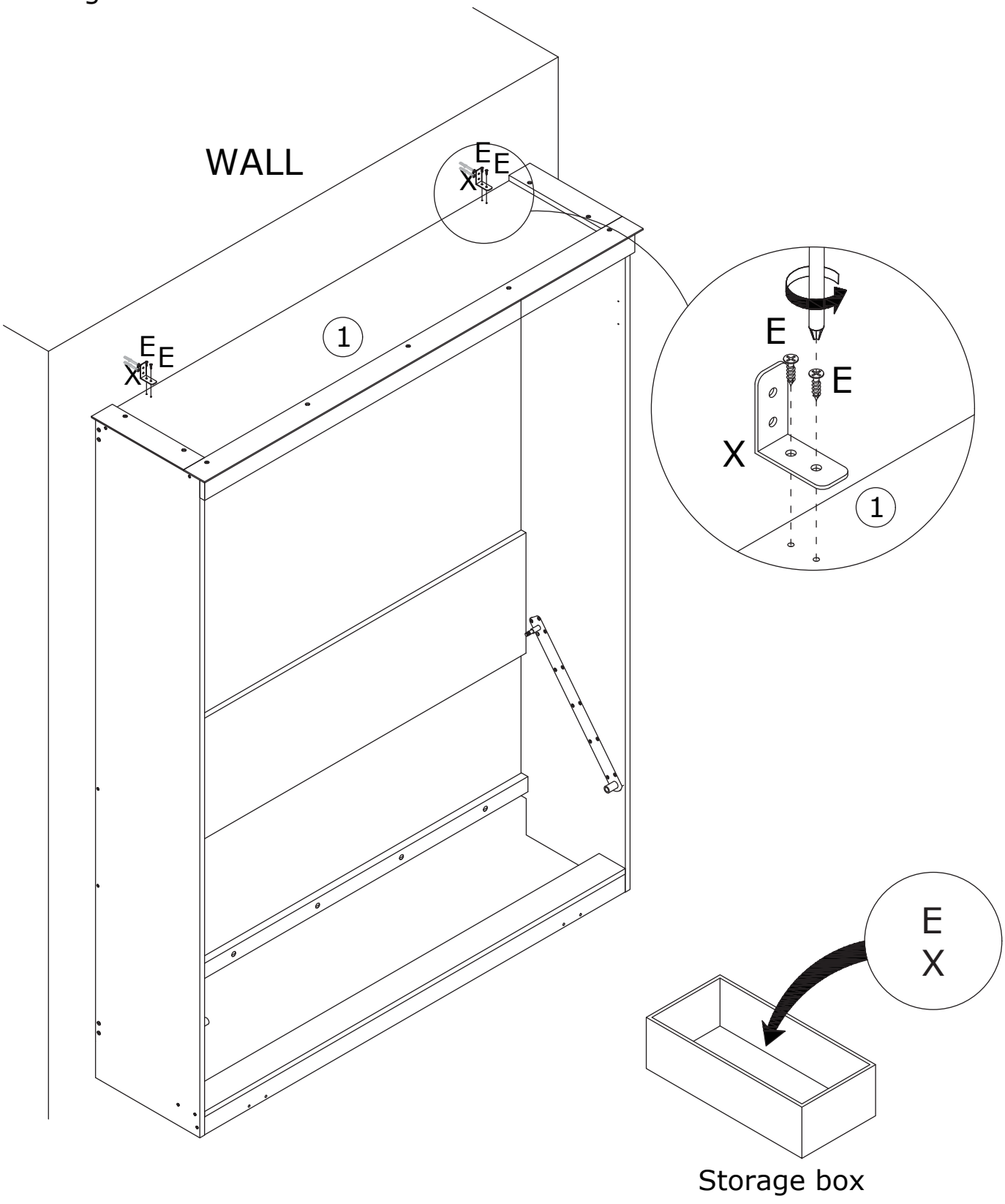

34

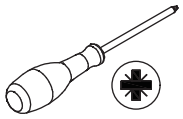

Option A

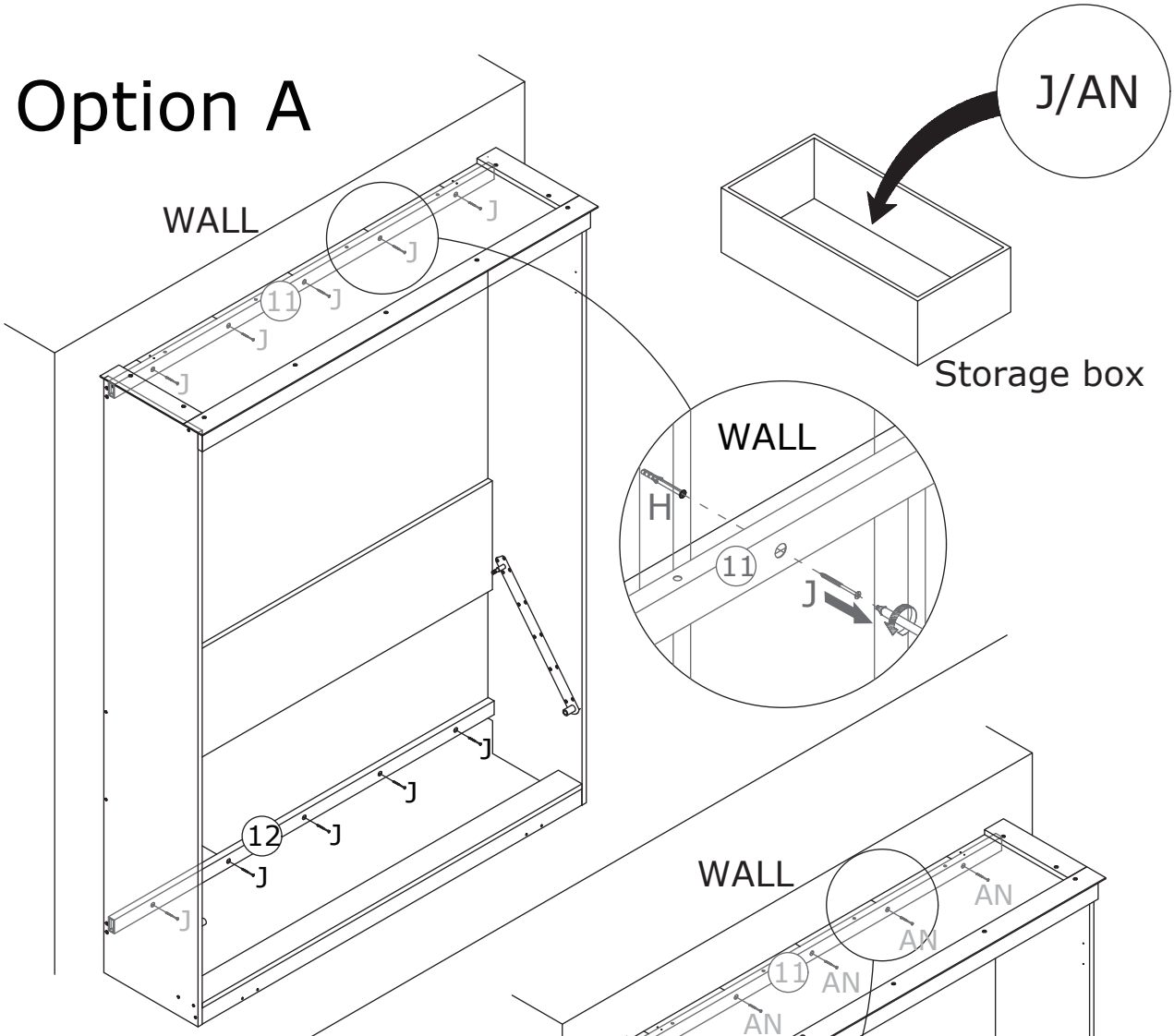

Option B

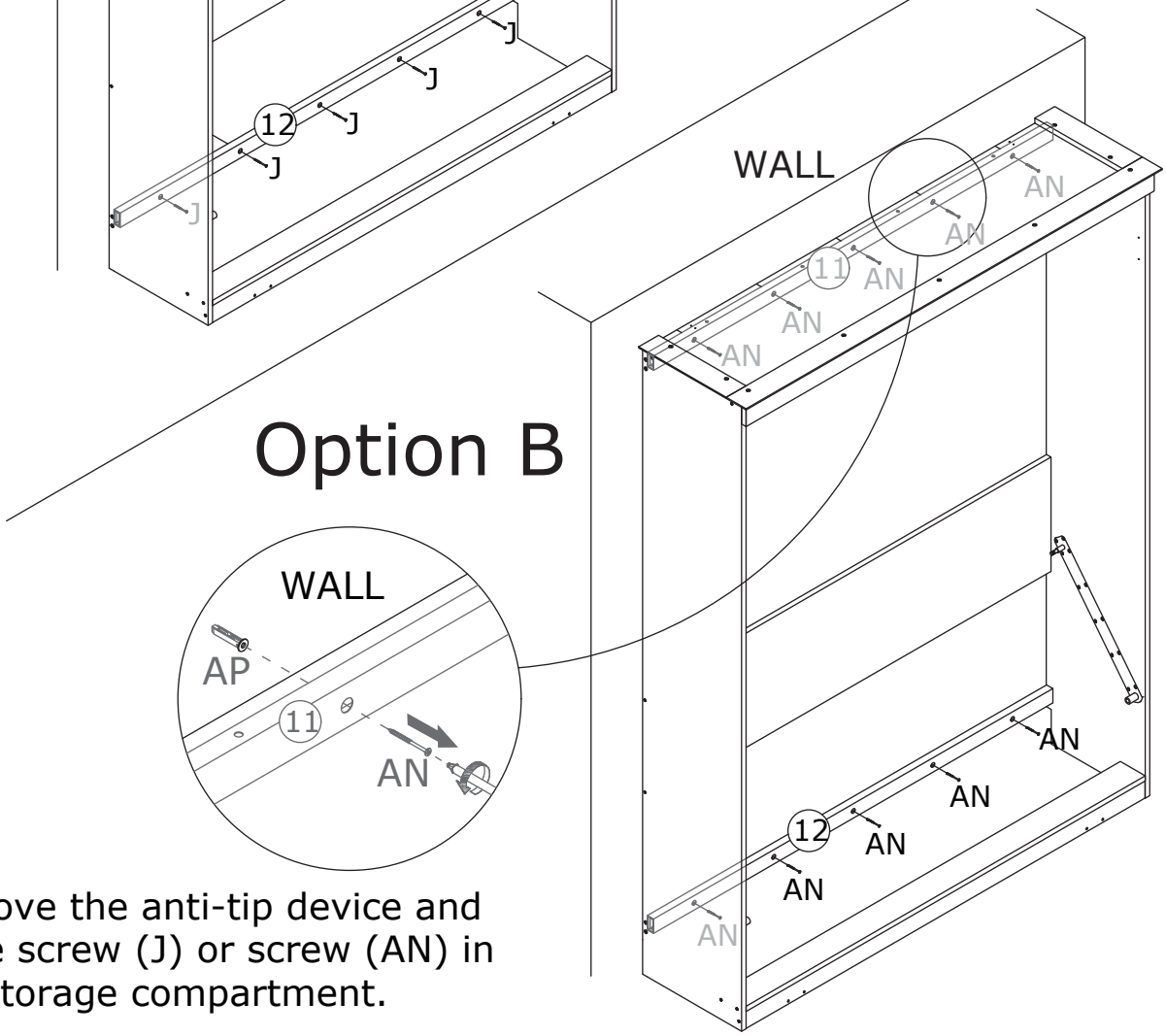

Remove the anti-tip device and place screw (J) or screw (AN) in the storage compartment.

35

After removing the anti-tip device from the cabinet, place the cabinet in an open area and slowly tip it over.

Note: Once the anti-tip device has been removed, take care to prevent the cabinet from tipping over and causing injury.

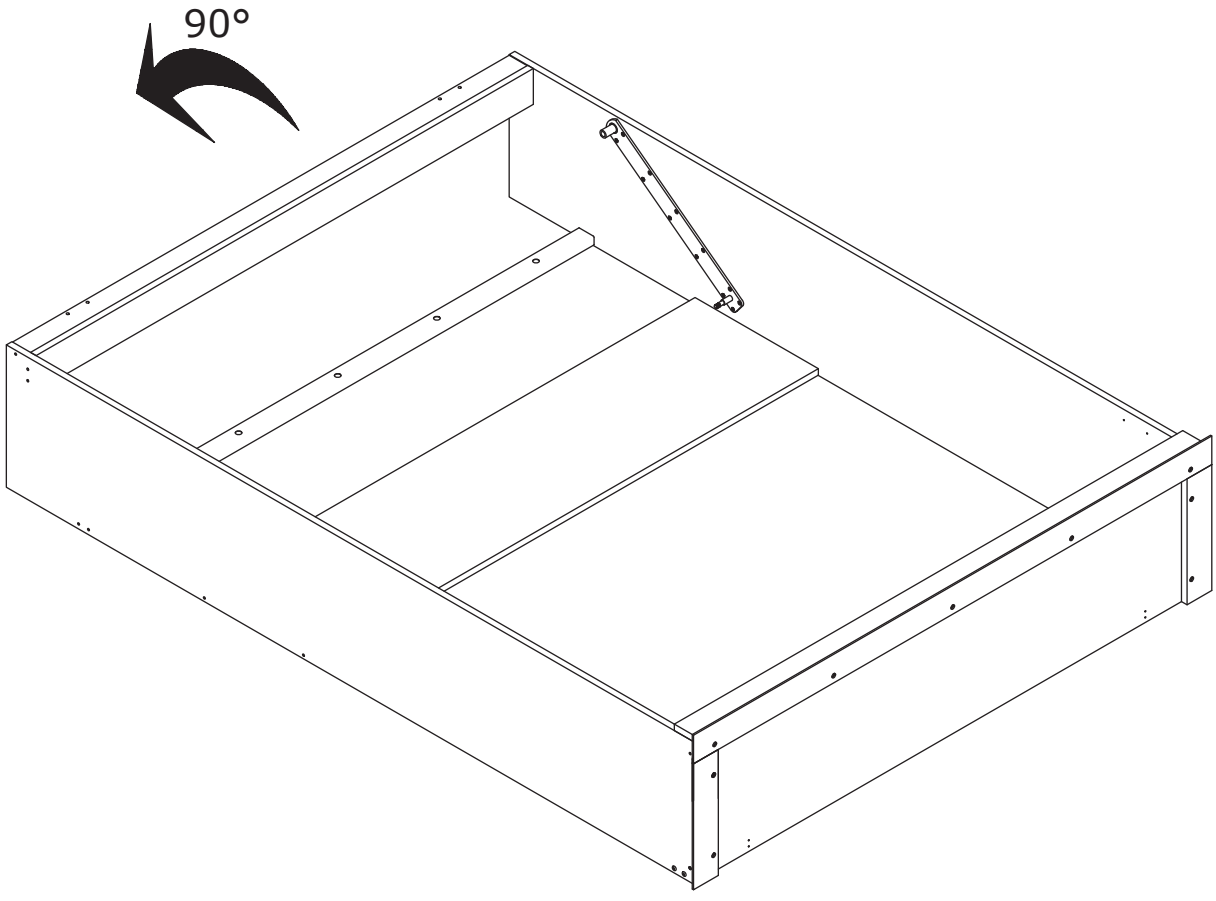

36

AC x 1

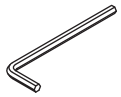

M4

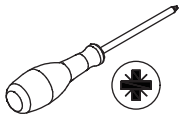

Use a wrench (AC) to remove the screws (AG) and panel 33, and place the screws (AG) in the storage box.

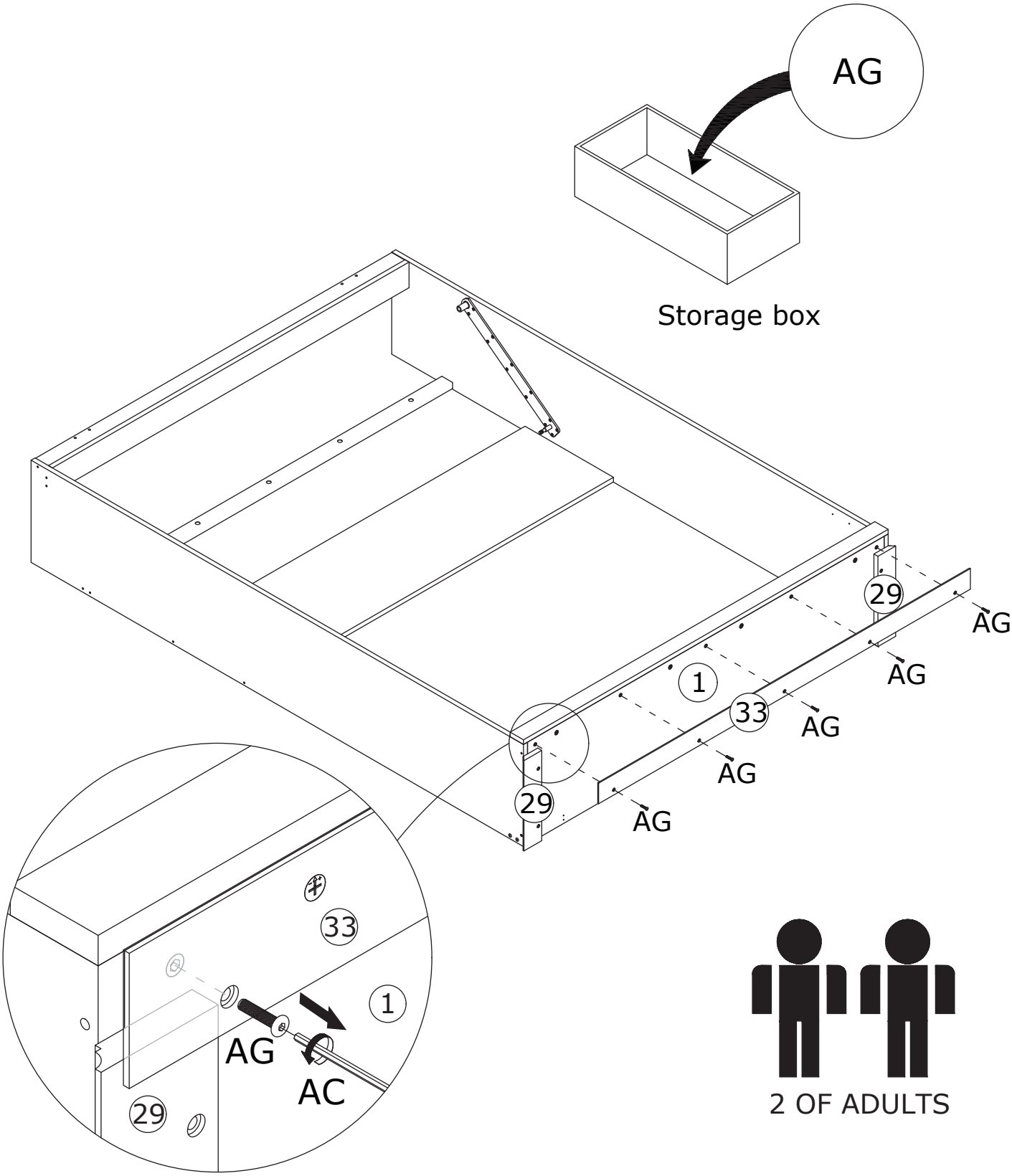

37

AC x 1

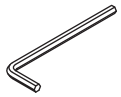

M4

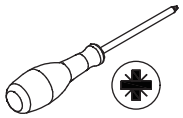

Use a wrench (AC) to remove the screws (AG) and panel 29, and place the screws (AG) in the storage box.

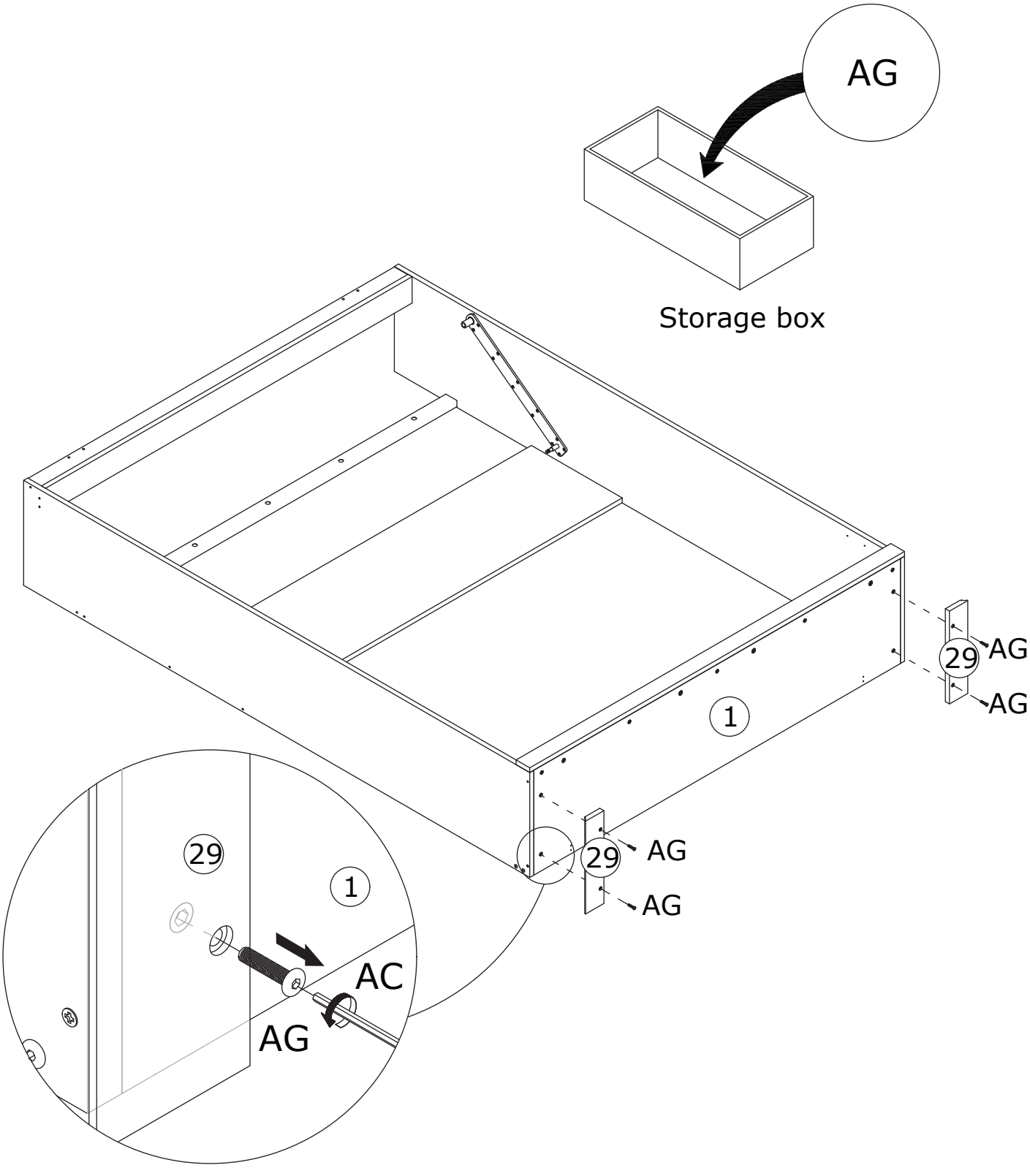

38

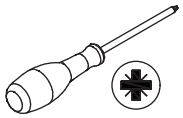

Remove the eccentric wheel (B), the wooden dowel (C), and panel 32, and place the eccentric wheel (B) and the wooden dowel (C) in the storage box.

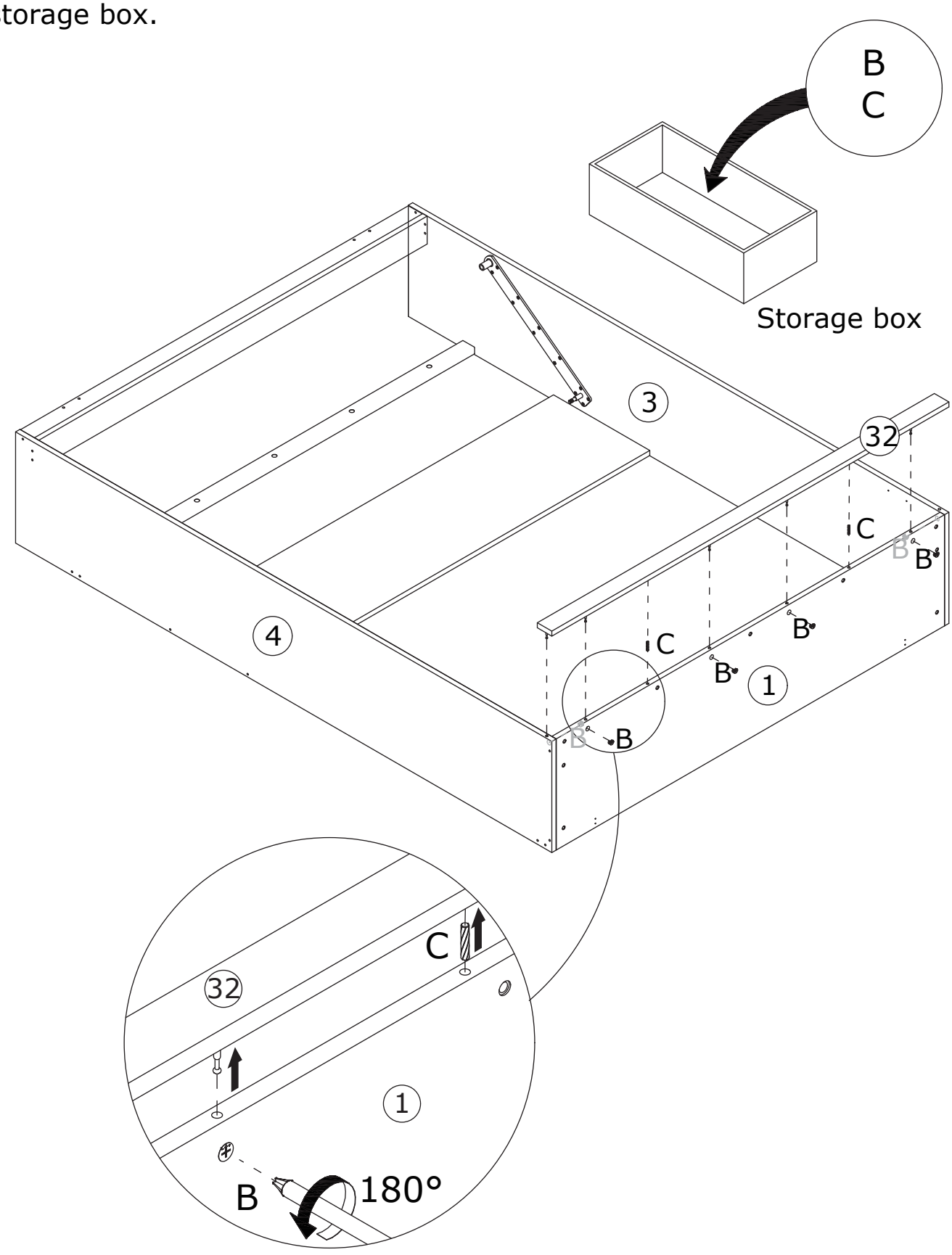

39

AC x 1

M4

Hold panels 2 and 5 in place with your hands and remove screw (D). Use part (AC) to remove screw (P), and place the wooden dowel (C), screw (D), and screw (P) in the storage box.

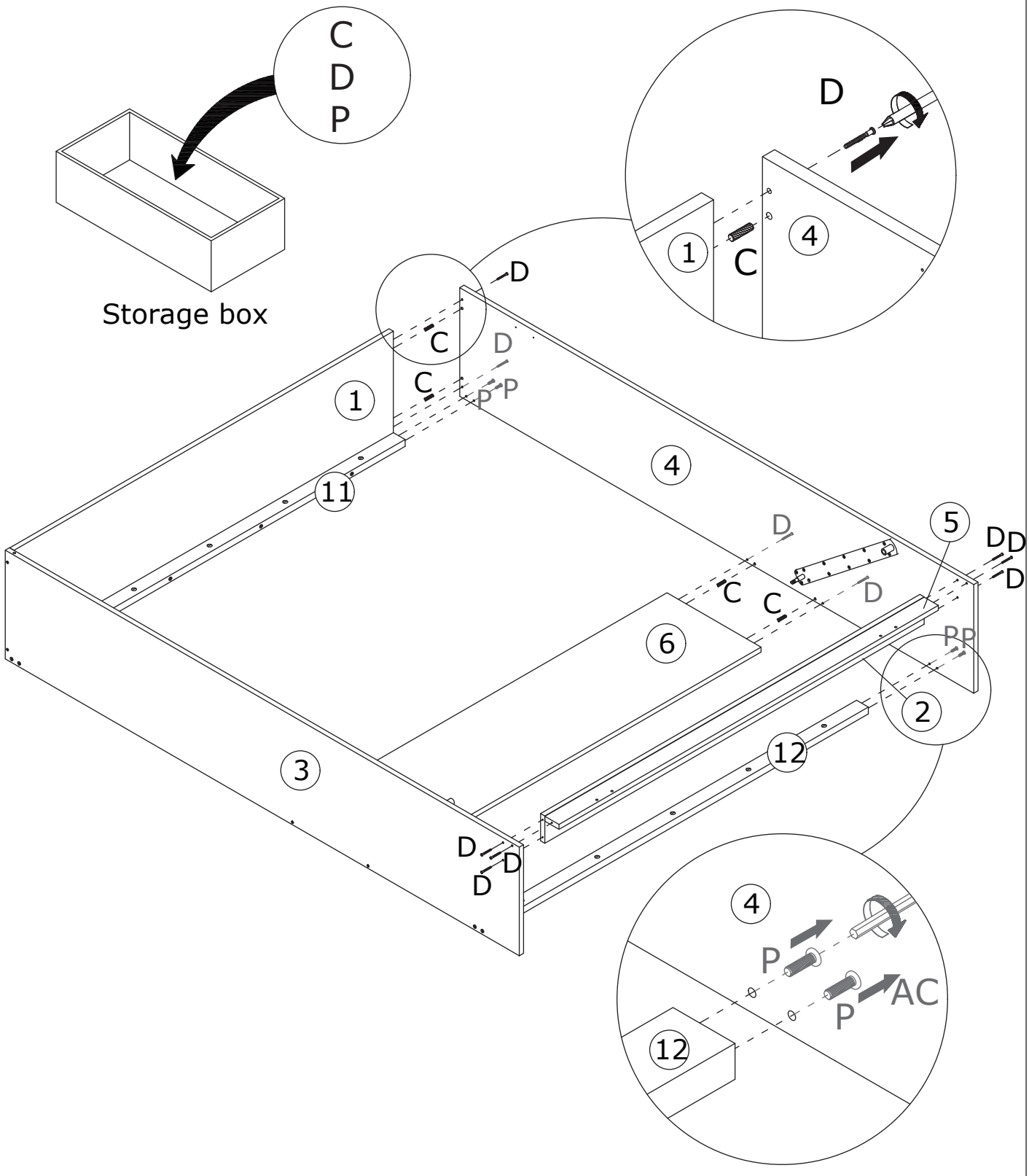

40

AC x 1

M4

Remove the screw (D) and the wooden dowel (C), then use part (AC) to remove the screw (P) and place it in the storage box.

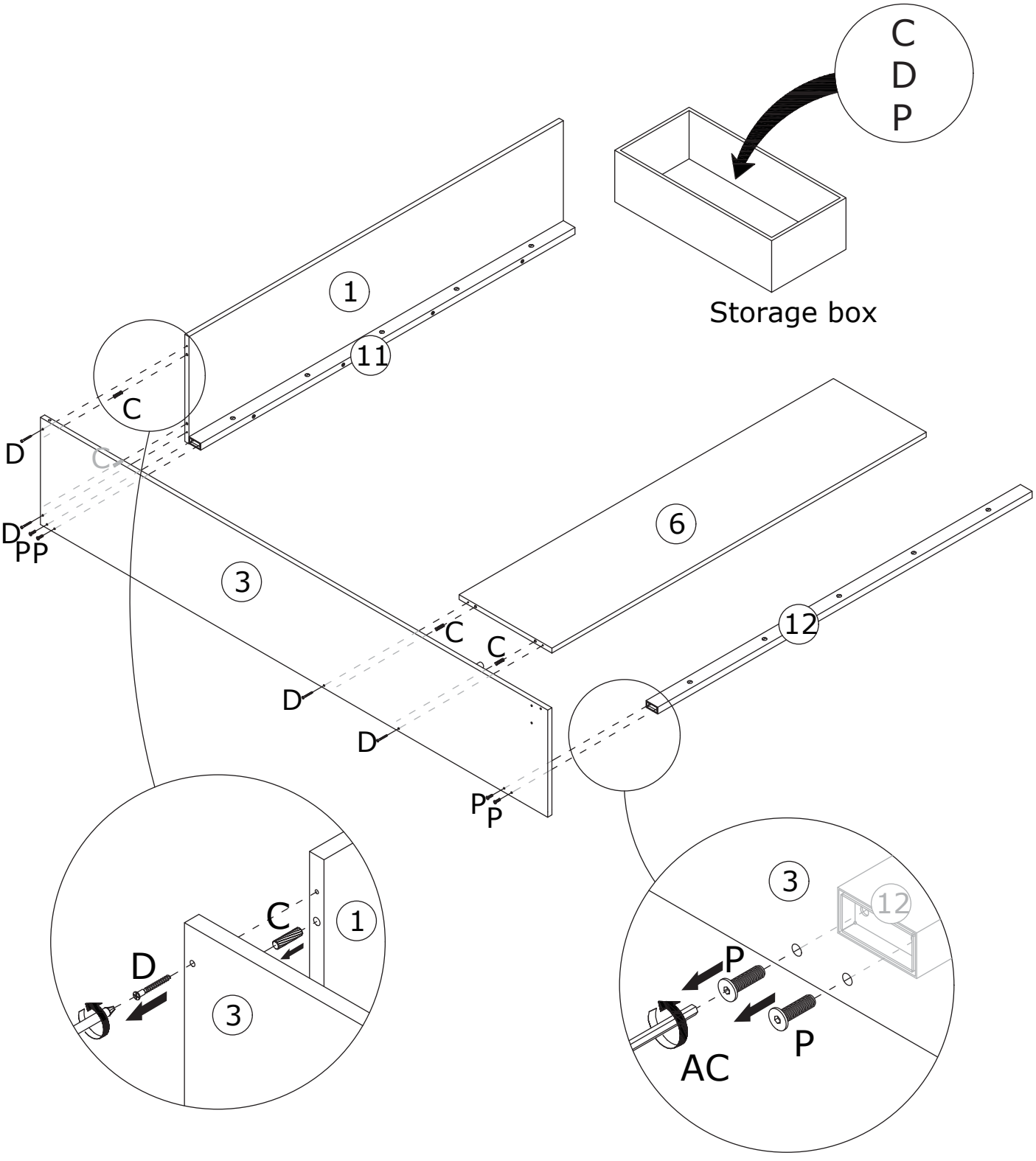

41

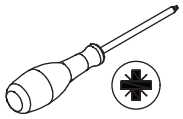

Remove the eccentric wheel (B), the wooden dowel (C), and panel 5, and place the eccentric wheel (B) and the wooden dowel (C) in the storage box.

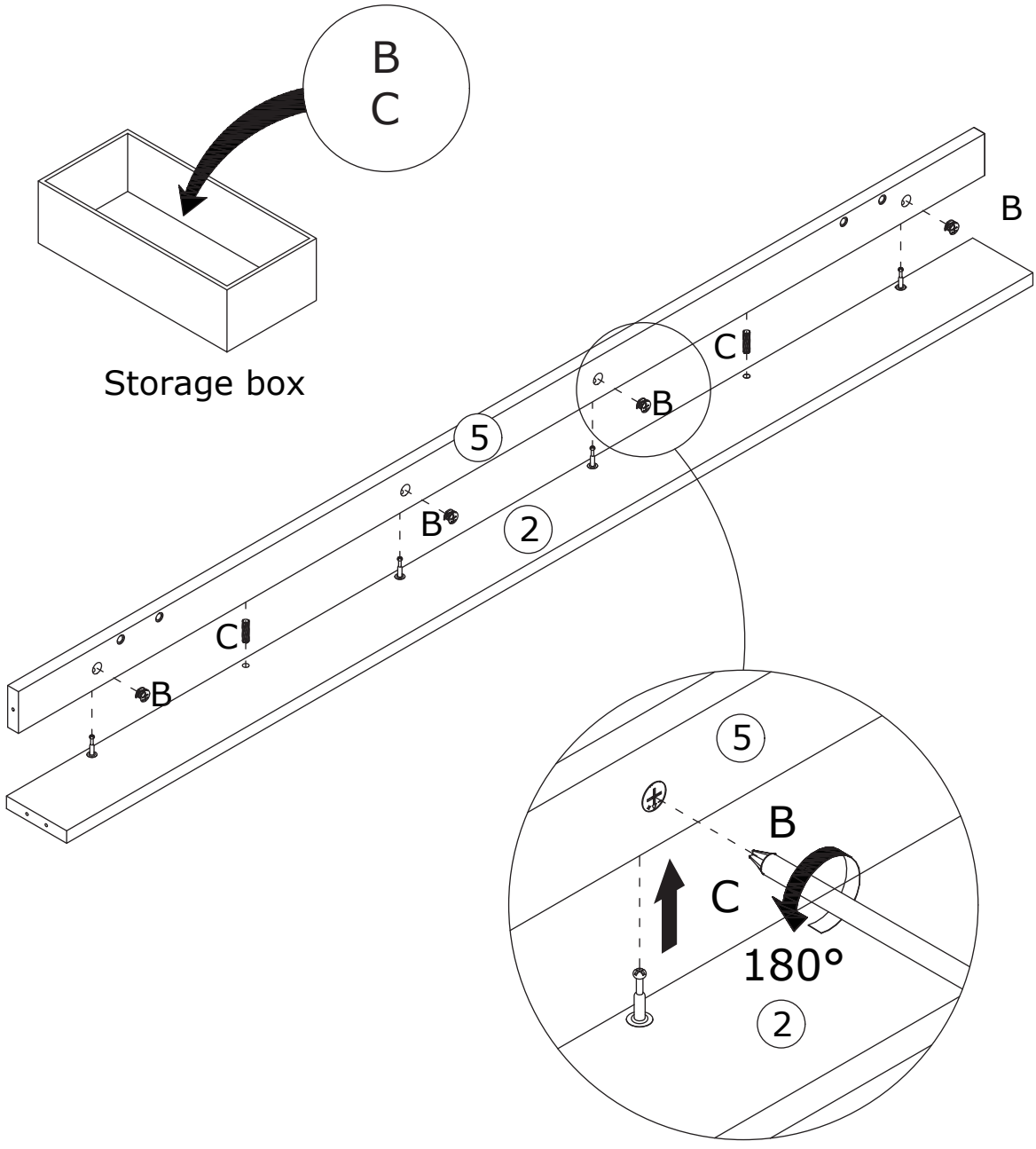

42

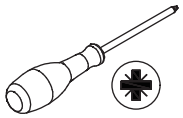

Remove the self-tapping rod (A) and place it in the storage box.

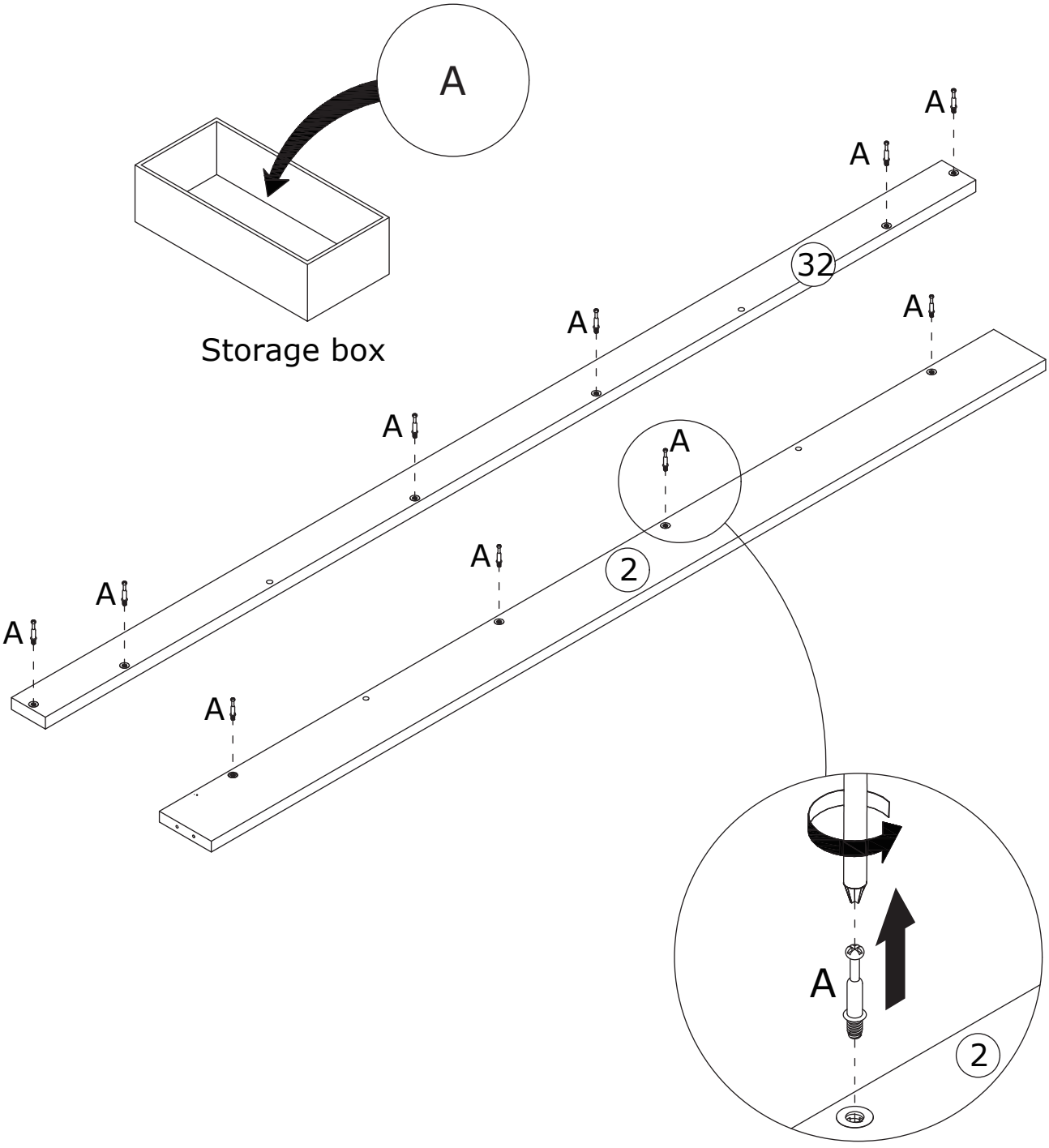

43

AC x 1

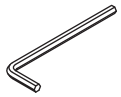

M4

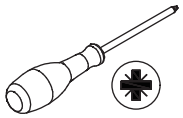

Use a wrench (AC) to remove the screw (F) and component (11), and place the screw (F) in the storage box.

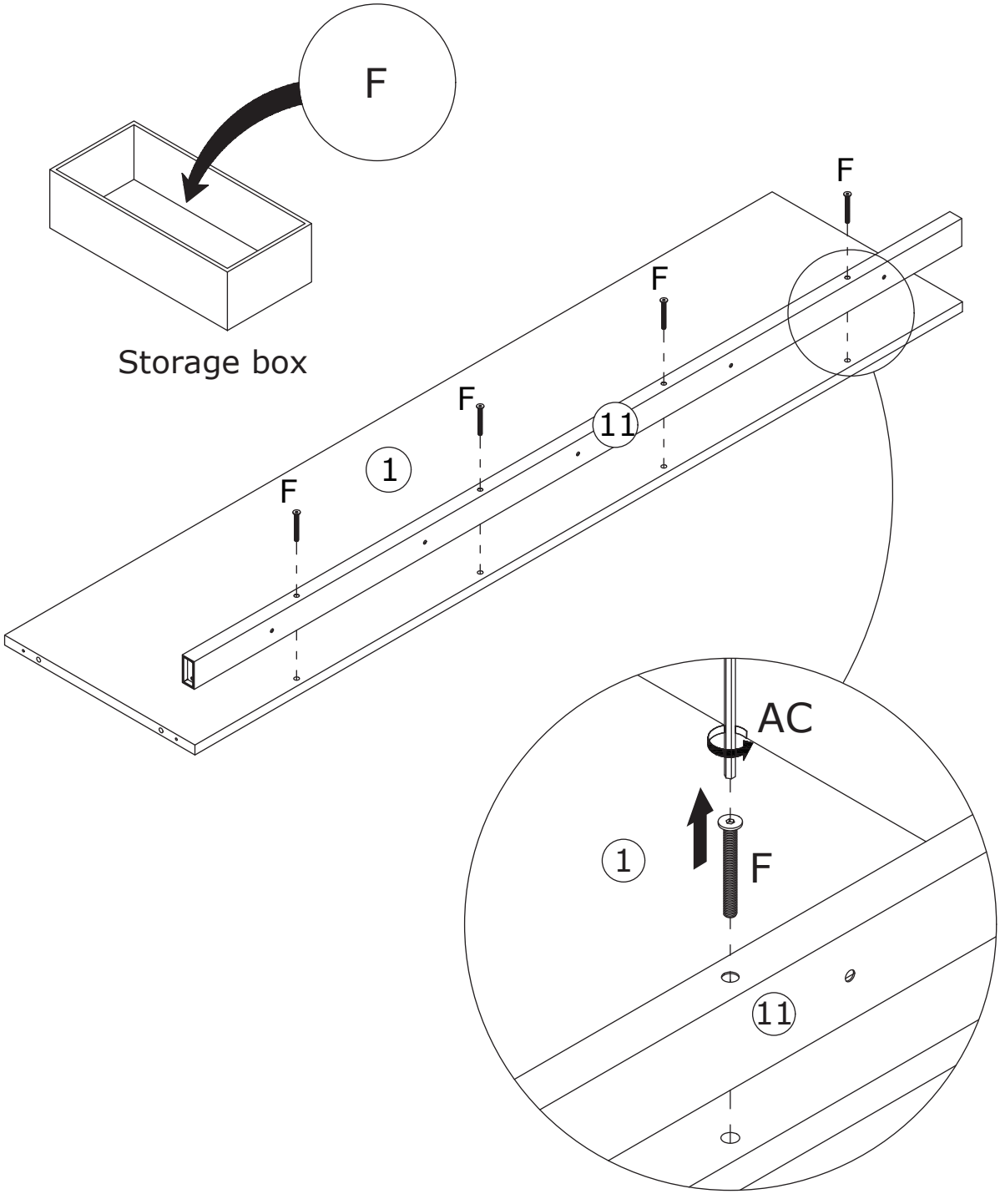

44

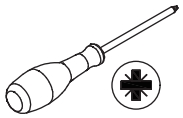

Remove the screws (AB) and part (13), and place the screws (AB) in the storage box.

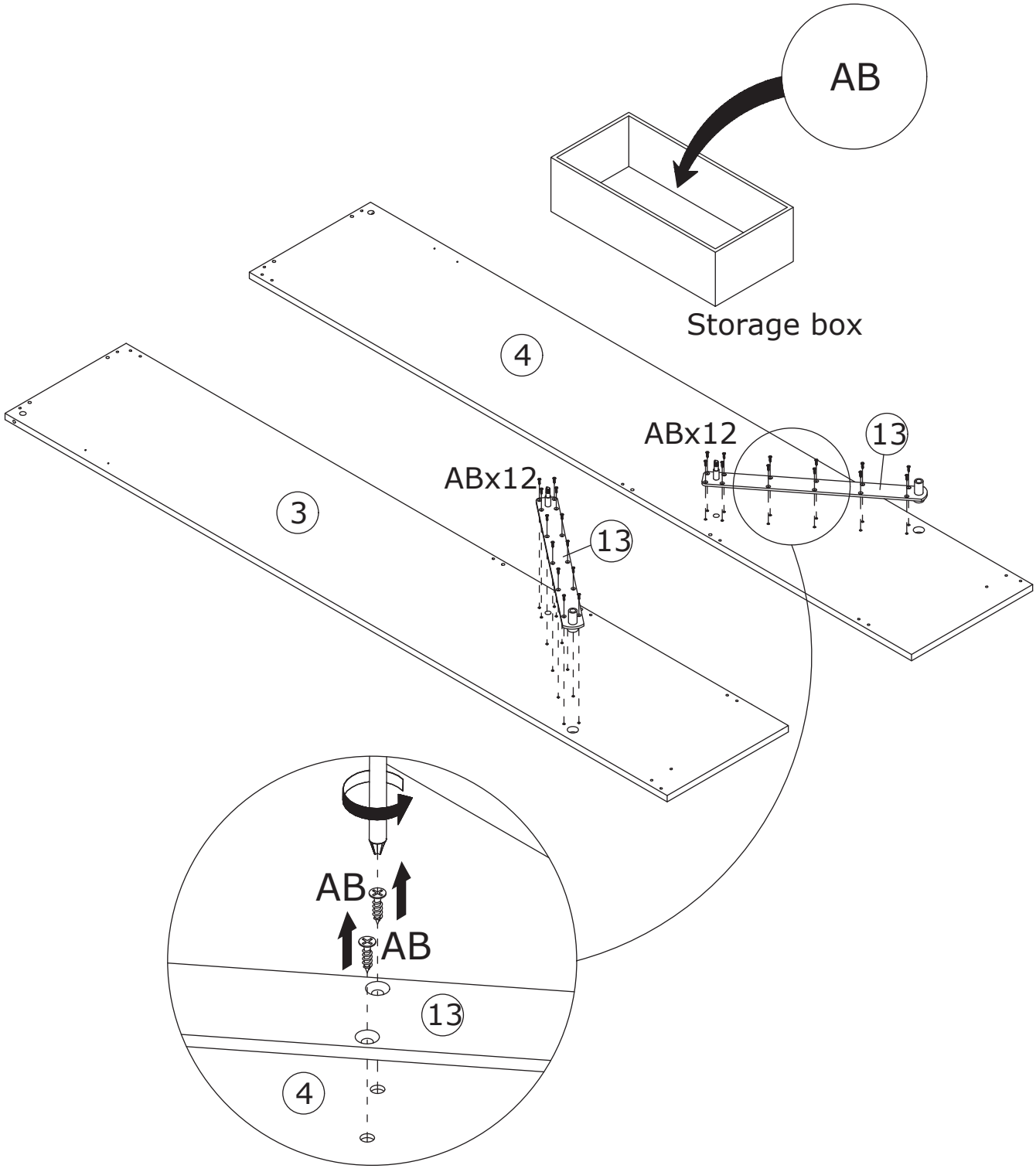

WARRANTY

WARRANTY CLAIMS

- There is a 30-day warranty for broken furniture or any other problems that do not work properly. The warranty will start from the date of purchase which must be verified by proof of purchase.

- Before making a claim, we may be able to answer your query, simply call us. Please leave your purchase order number, along with some details of the problem, if you want a replacement part. We will arrange within 48 hours. If there is out of stock, we will reply with a shipping date.

- The product must be used in accordance with the instructions provided. For health reasons.

- For other reasons, if the furniture needs to be returned, it must be cleaned and dried and operated within 30 days of receipt.

Type of Warranty Claim

- Failure to follow the furniture instructions will invalidate the warranty. Attention please.

- Does not include damage during installation, but includes damage during transportation.

Scope of responsibility

- Shall not bear any responsibility for misuse or user damage and / or loss of parts during the installation of furniture.

- After using, the damage and scratches of the furniture are not covered by the warranty.

The Warranty Relates to All Bought in The Us and Covers The Following Areas

- Sheet parts: 1 month from the date of purchase.

- Electrical parts: 1 month from the date of purchase.

RETURNS

CHANGED YOUR MIND AND NEED TO RETURN YOU ITEM?

PLEASE FOLLOW THE BELOW INSTRUCTIONS:

- If you have purchased and have simply changed your mind, follow the retailer's instructions for returns.

DEFECTIVE ITEMS

- If your item is defective in any way, i.e. it doesn't work but you can't identify why, in the first instance, please call us.

DAMAGED ITEMS

- If you receive an order with obvious shipping damage from the retailer, then we suggest the delivery is refused. If the delivery has been accepted and then shipping damage is found, please follow the specific instructions advised by the retailer.
  In all circumstances please save all packaging material and paperwork for the order. Please be aware that if you dispose of packaging material or attempt to return the merchandise without contacting the fulfiller, you jeopardise your chances of making a claim, and you may not receive a credit for the return.

AFTER-SALES CONTACT


adelahu@fufugaga.com


208-820-0068