ASSEMBLY INSTRUCTION
ELEGANT LOUNGER

Legs and hardware are stored in the bottom of the sofa, please take out for assembly.

NOTE: Do not use power tools for assembly. Power tools increase the risk of over tightening which lead to splitting or cracking the wood.

COMPONENT LIST

NO.	DRAWING	QTY	DESCRIPTION
A		1	SOFA
B	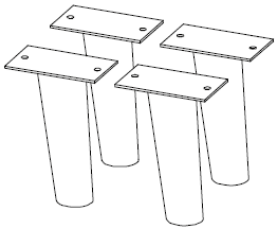	4	WOODEN LEGS 6”*2-3/8”*2-3/8”
C	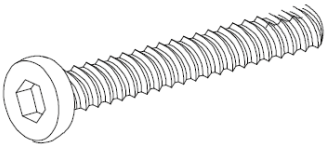	8	BOLT 5/16”*1-1/8”
D		8	FLAT WASHER 5/16”*3/4”
E		1	ALLEN KEY 5/16”
F	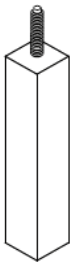	1	WOODEN SUPPORT LEG 5.5”*1”*1”

STEP 1: Legs and hardware are stored in the bottom of the sofa, please take out for assembly.

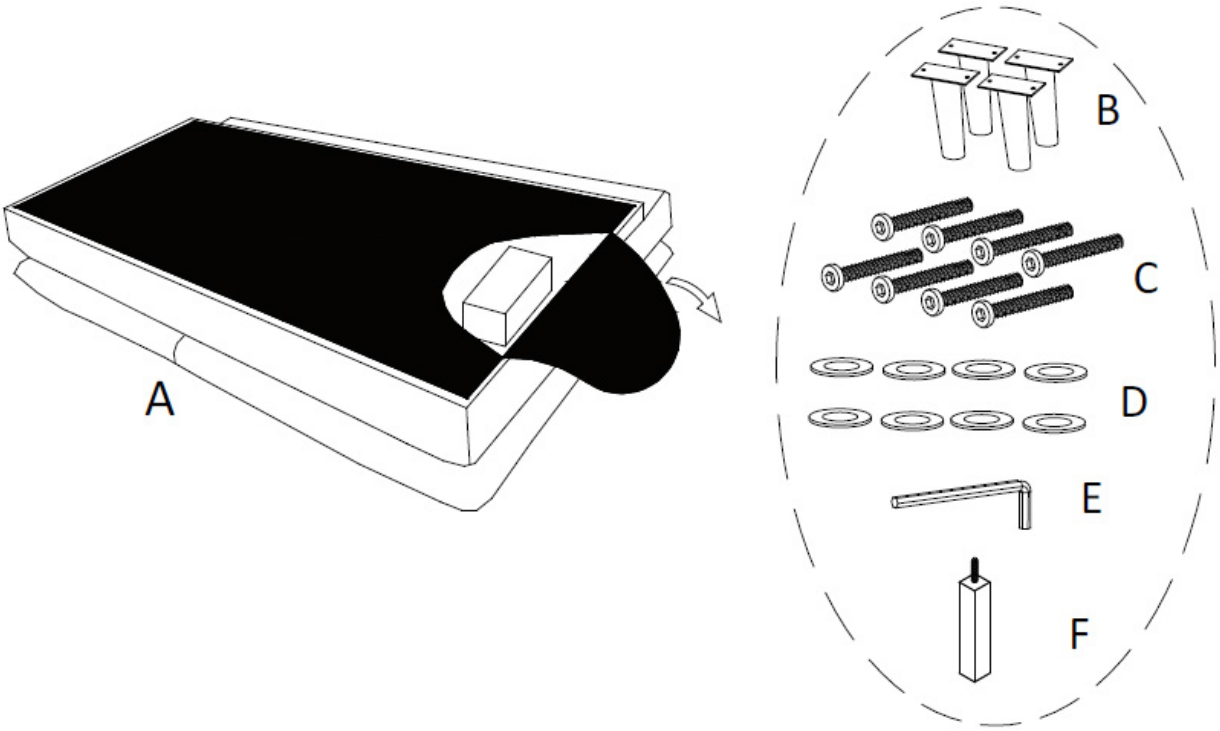

STEP 2: Align and attach legs to pre-drilled holes, insert bolts and washer and tighten with Allen Key.

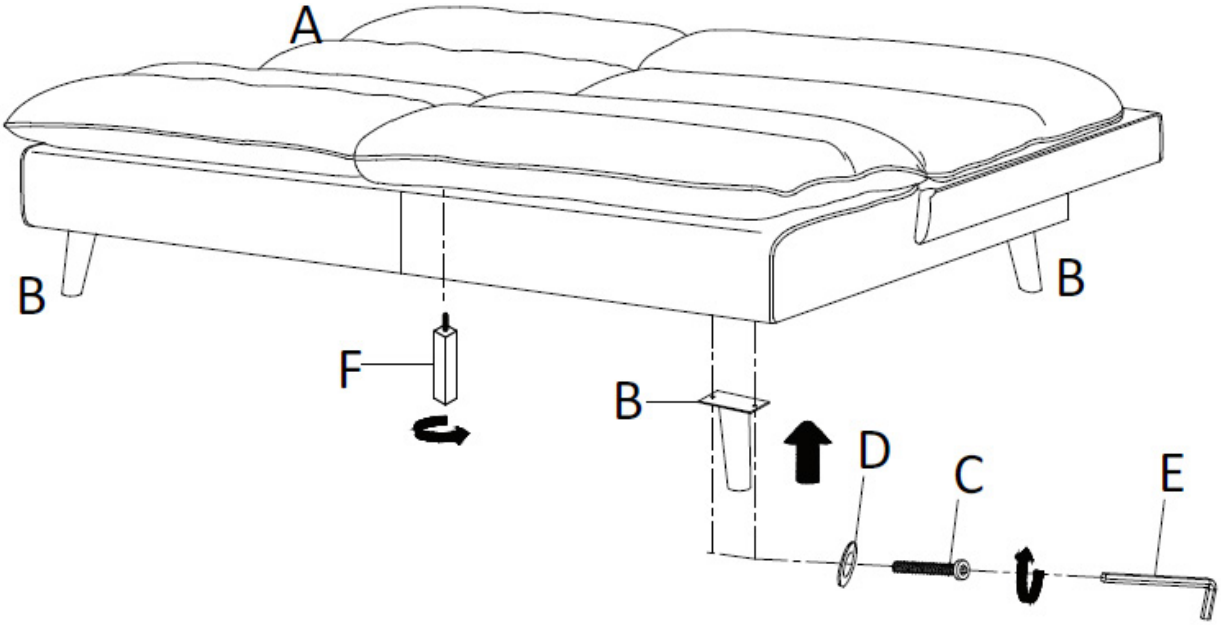

STEP 3: Use as sofa fold the back rest to upright position.

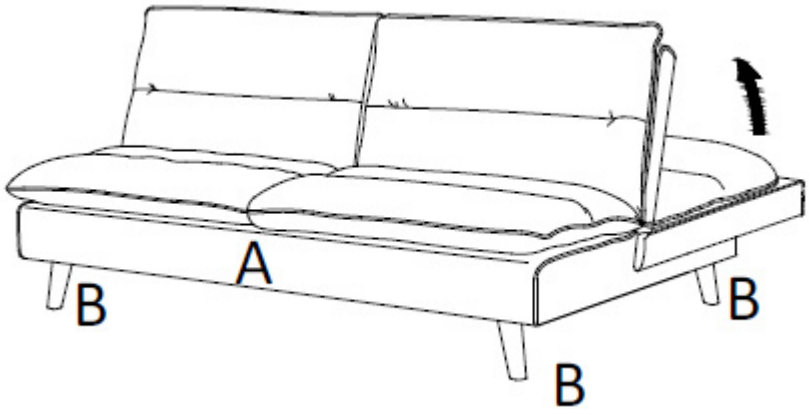

Use as bed push to front then unfold to flat the back rest.

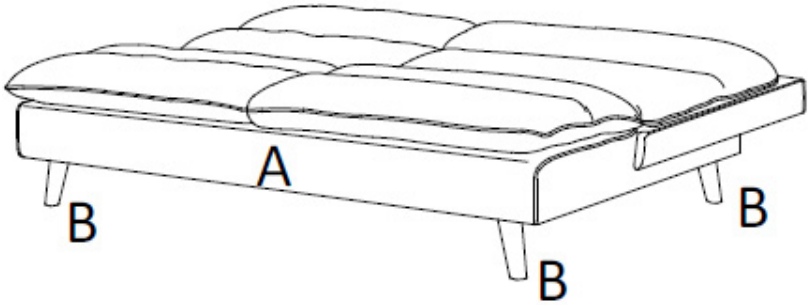

STEP 4: Click clack sofa assembly is completed.

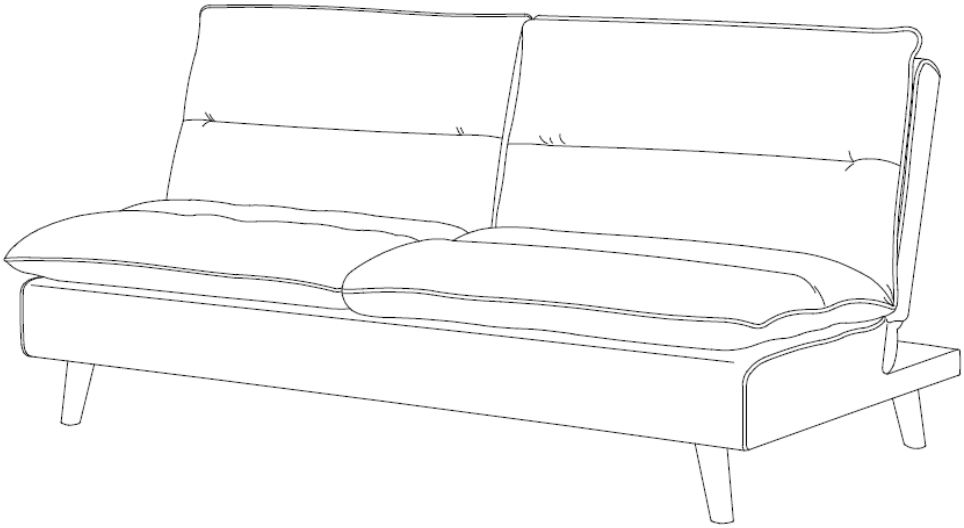

CARE INSTRUCTION FOR 100% POLYESTER

In order to maintain the original appearance of your fabric furniture, please follow below simple care procedures:

- Avoid exposing furniture directly to sunlight or heating and air conditioning outlets. Sunlight and / or exposure to heating and air conditioning outlets will fade / damage fabric.
- Do not place your upholstered furniture too close to windows, radiators or vents and be sure to use window treatments to block the sun's rays.
- Vacuum or wipe with a cloth regularly to remove dust.

For items used on wooden floor, hard surfaces or carpets, it is recomended to install protective pads under all legs and supports to avoid / prevent from damages / scratches discoloration.