Metal Dog Cage Instruction Manual

Please read this manual carefully before assembly

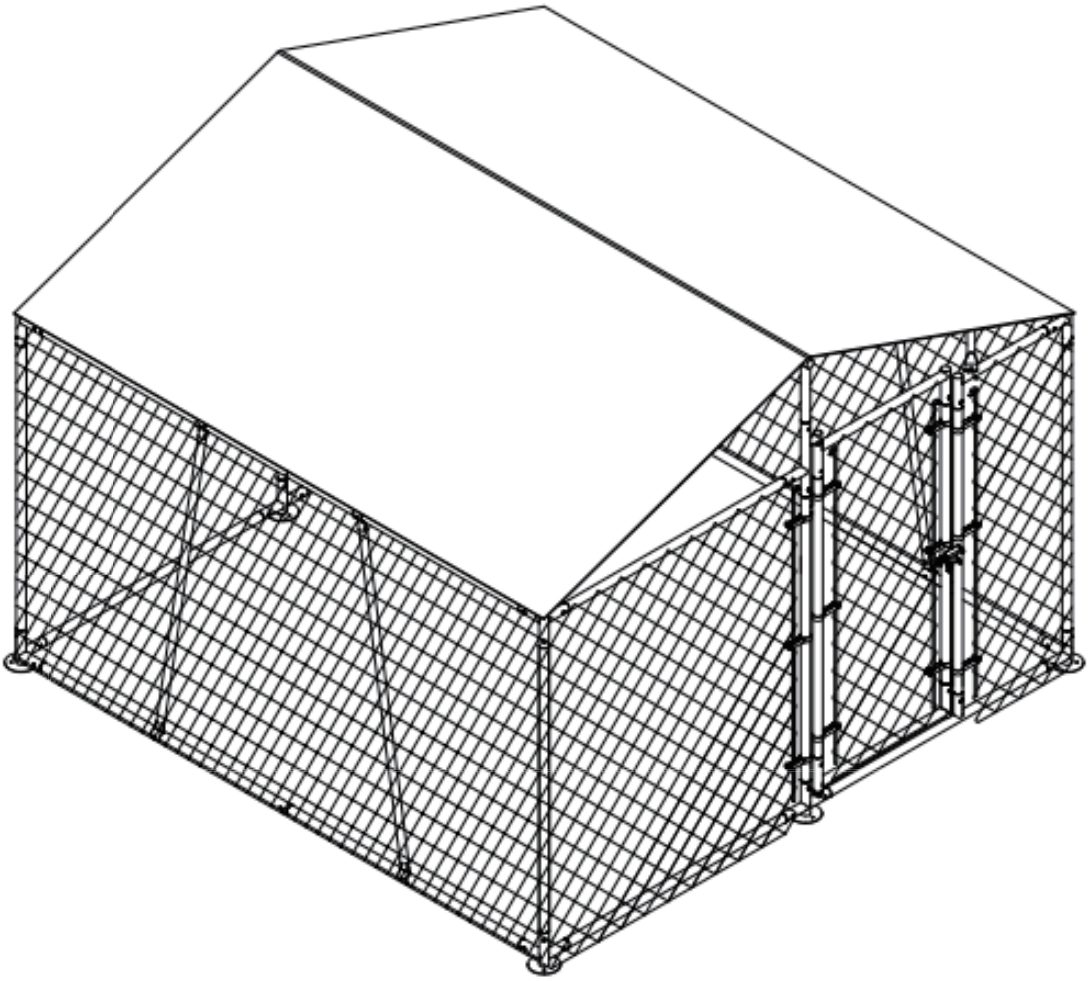

vipservice2023@yeah.net

PLEASE READ THESE INSTRUCTIONS CAREFULLY AND KEEP THEM FOR FUTURE REFERENCE

Warning:

1. Do not fully tighten all screws until the step or process has finished.
2. Check you have all the components and tools listed.
3. Remove all fittings from the package and separate them into their groups.
4. Keep children and animals away from the work area, small parts could choke if swallowed.
5. Make sure you have enough space to lay out the parts before starting.
6. Do not stand or put weight on the product, this could cause damage.
7. Assemble the item as close to its final position (in the same room) as possible.
8. Assemble on a soft level surface to avoid damaging the unit or your floor (use an opened-out unit carton).
9. We do not recommend the use of power drills/drivers for inserting screws, as this could damage the unit. Only use hand screwdrivers.
10. Dispose of all packaging carefully and responsibly.
11. In case of rainy and snowy weather, please clean up the accumulated snow and water regularly to avoid excessive accumulation of rain and snow that will affect the stability of the structure.
12. The brown spot on the tube is not corrosion but the residue of passivation fluid which is used to protect the tube. It can be removed easily with hot soapy water but doing so would weaken the tube's corrosion resistance

NO.	PART	QTy
1		4
2		1
3		1
4		4
5		1
6		1
7	44.37″ (with marbles at both ends)	2
8	44.37″ (with holes at both ends)	1
9	44.37″ (with holes at both ends)	1
10	44.37″ (one end with marble, one end with hole)	1
11	44.37″	1
12	44.37″	2
13	41.93″	6
14	41.93″	1
15	17.91″	1
16	46.97″	6
17	46.97″	1
18	11.81″	2
19	48.98″	3
20		1
21		2

NO.	PART	QTy
22	46.18″	1
23	46.18″	1
24	47.24″	4
25		12
26		6
27	(7.48×8.268FT)	1
28		12
29		250
30		1
40	44.37″	2
41	51.26″	2
42	51.26″	2
A	(M6×47)	1
B	(M6×40)	6
C	(M6×20)	12
D	(M6)	1
E	(1.444*4.1FT)	1
F	(L=27.461FT) 1.3m	1
M	(M6×45)	8

(#29-1): 8pcs 'this cable tie is longer than (#29)'

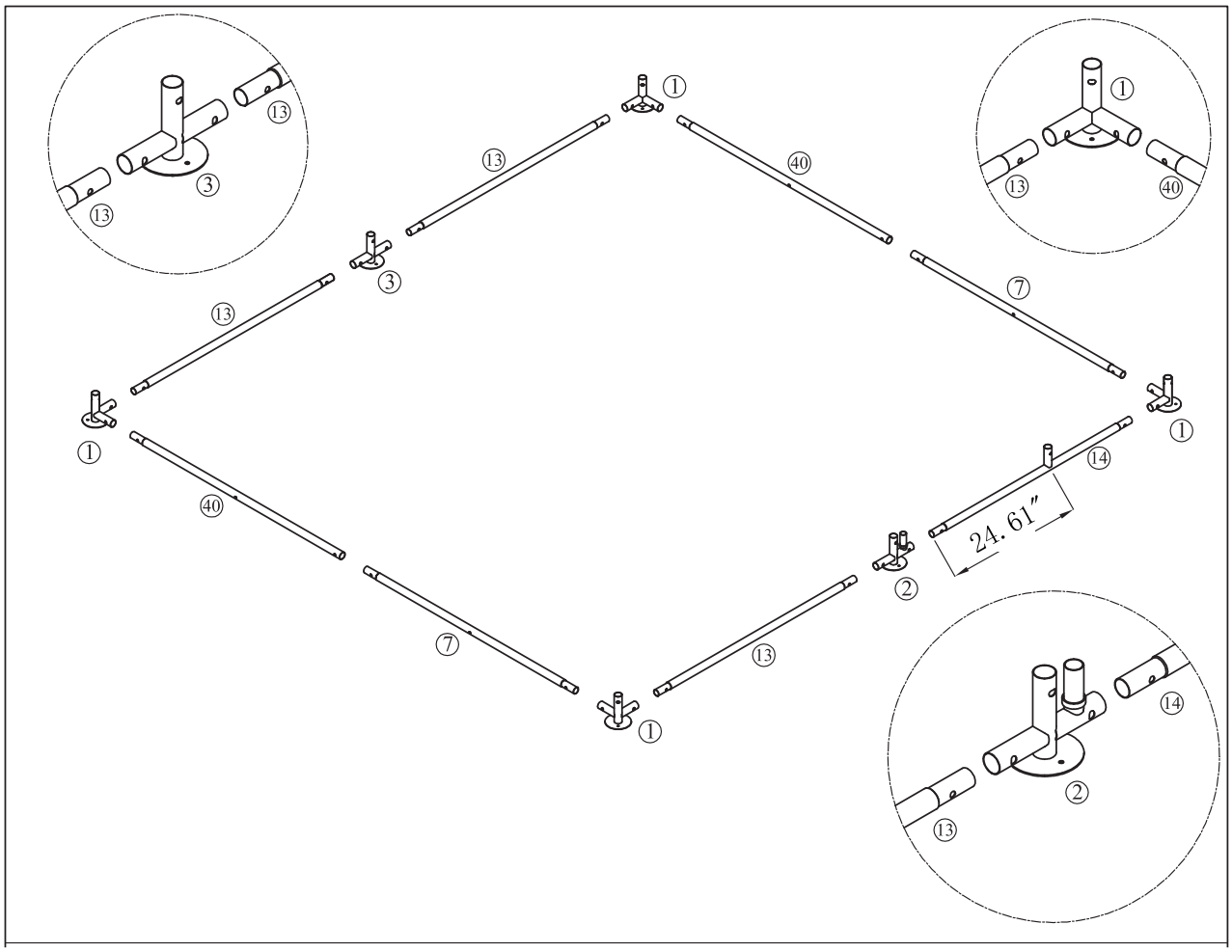

Step 1:

(1)As shown in the above picture,put these components on the ground according to the part number.

(2)Please note that the pipe fitting(#14)cannot be installed backward,otherwise it will affect the door installation.

(3)The joint is 24.61″ from the pipe(#14)port (long distance side)and must be assembled in the middle joint(#2)

(The length from the pipe opening is very easy to distinguish)

Step 2:

(1)Please assemble pipe fitting(#16)as shown in the picture.

(2)Please pre-install part(#25)before inserting pipe fitting(#17)

(3)When inserting pipe fitting(#17),the lock should be facing outside and the pin rod should be facing upward.(As shown in the picture)

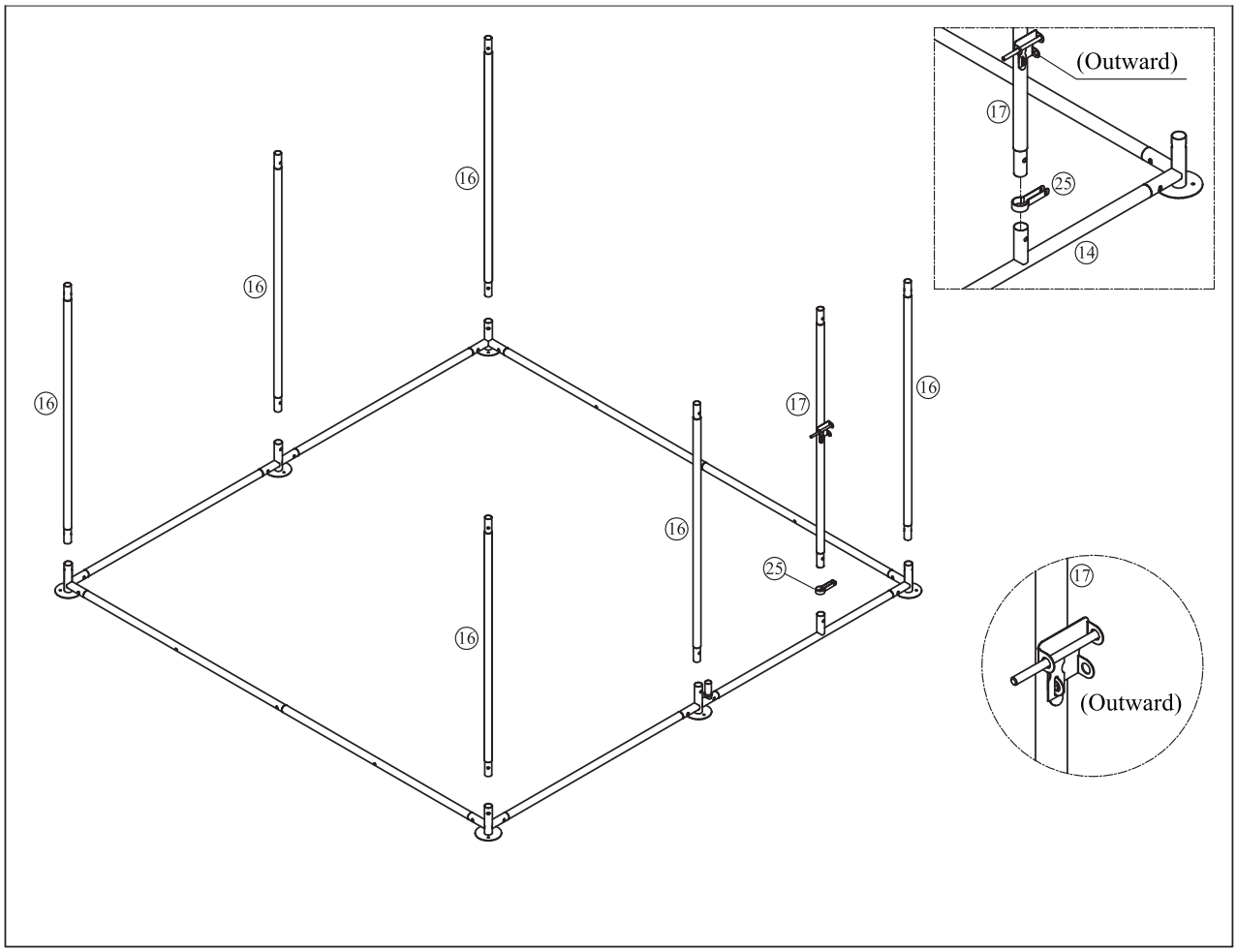

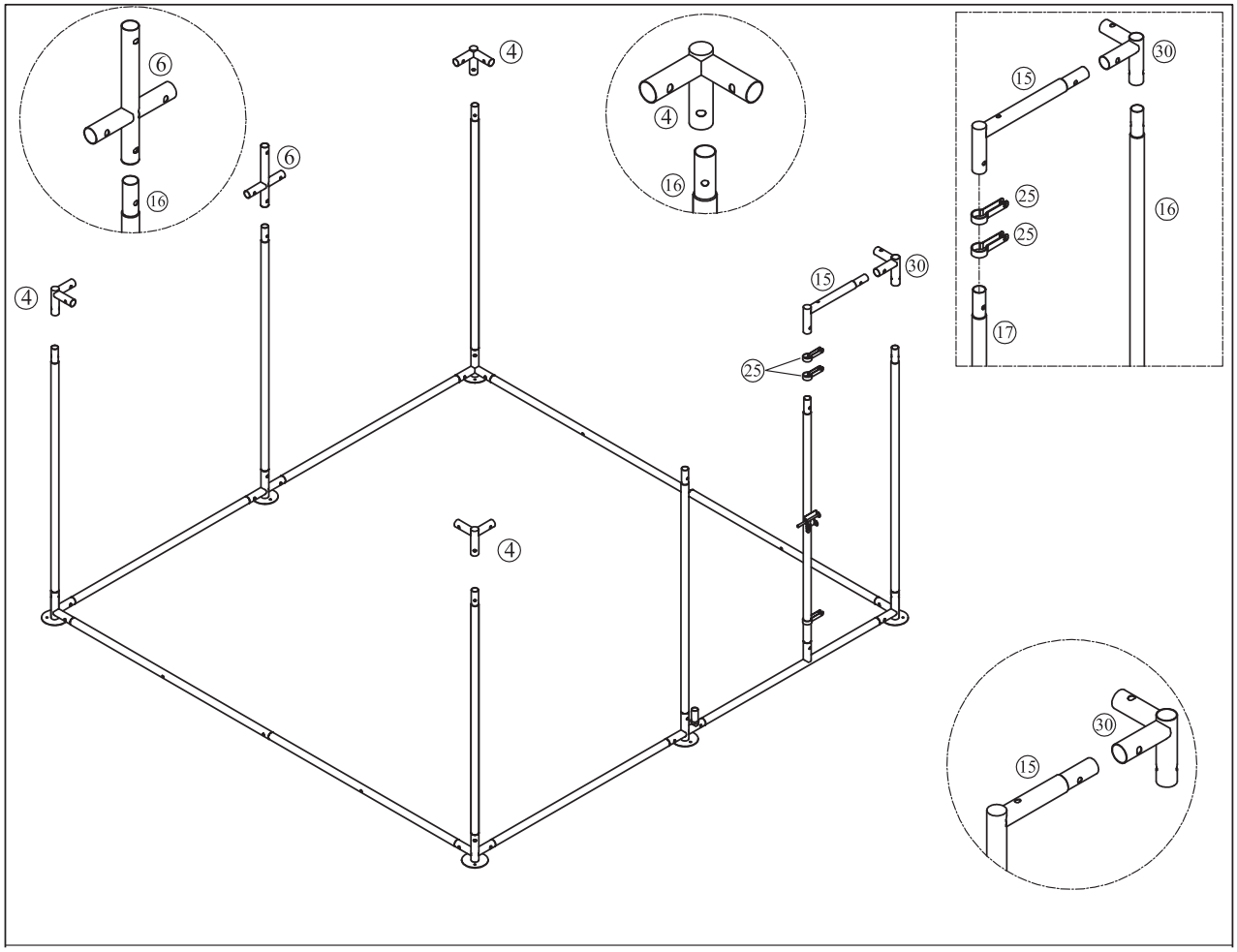

Step 3:

(1)Please assemble pipe fitting (#4) and (#6) as shown in the figure.

(2)Please assemble the longer end of pipe(#6)facing up

(3)Please pre-install(#25) before inserting pipe fitting(#15).

(4)Please insert the pipe fittings(#15) and (#30) horizontally at the same time,then inserted down for assembly.

Step 4:

(1)Please assemble pipe fitting(#13) as shown in the picture

(2)The three holes of the part(#9)and the hole of part(#30) are on the same level and facing upwards

(3)Please assemble the short end (15.08″)of pipe fitting(#9)to fitting(#30).Don't install it backward

(4)The hole left in the middle of the assembly of pipe fittings(#10)and(#12)needs to be locked with screws.

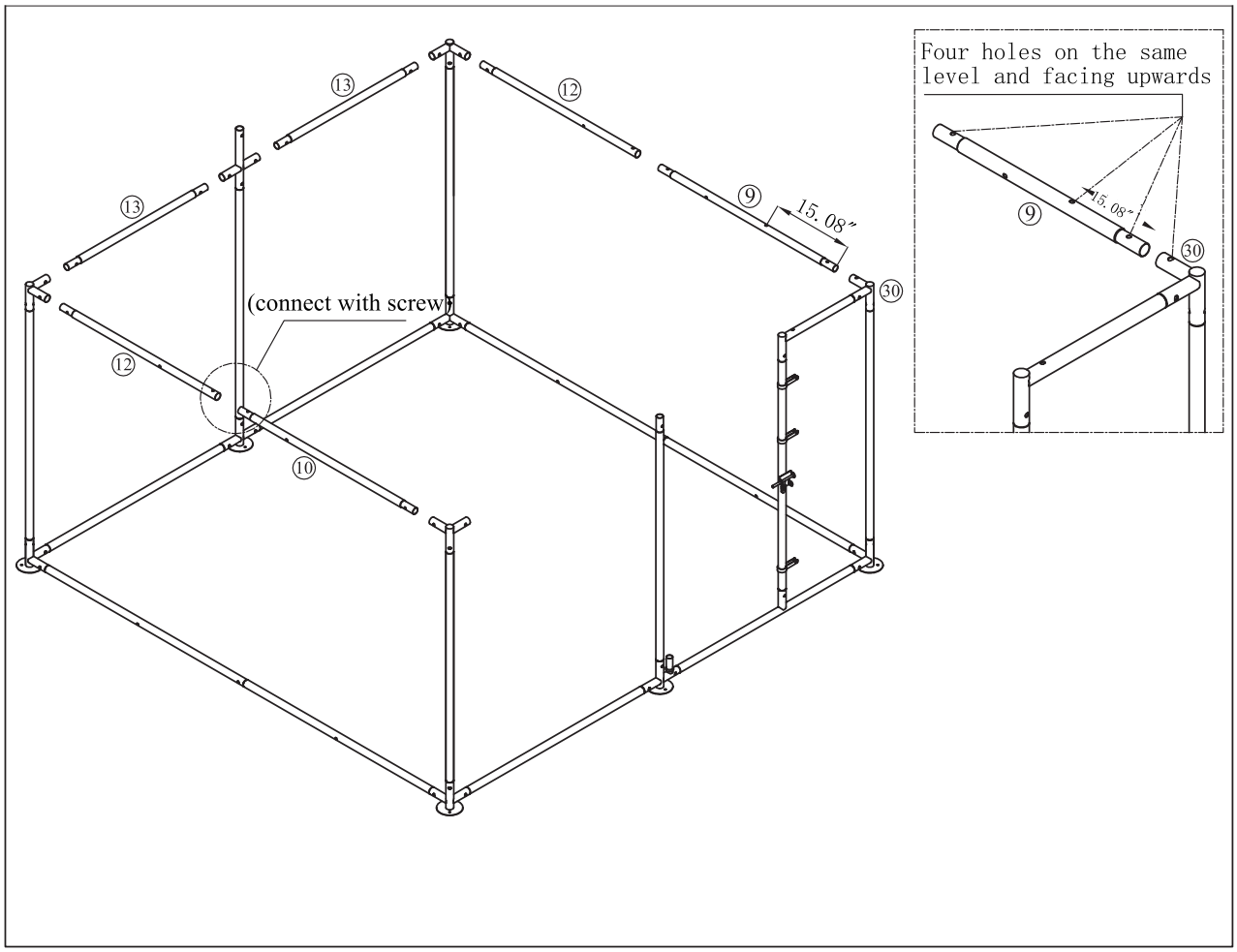

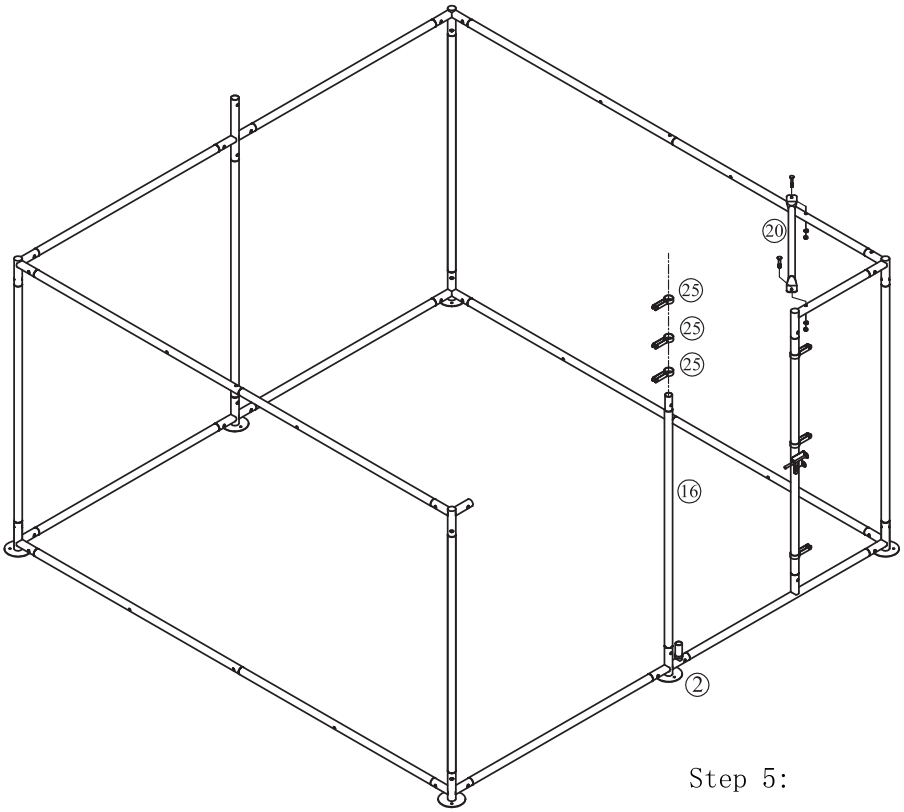

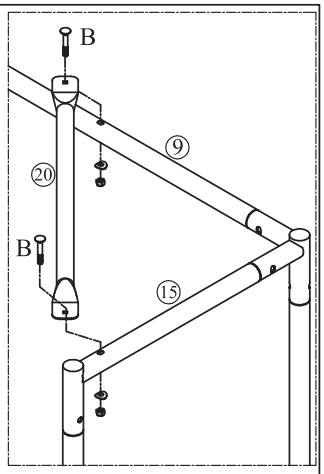

Step 5:

(1)Please lock part(#20)with screw B

(2)Please pre-install part(#25) before inserting pipe fitting(#16)

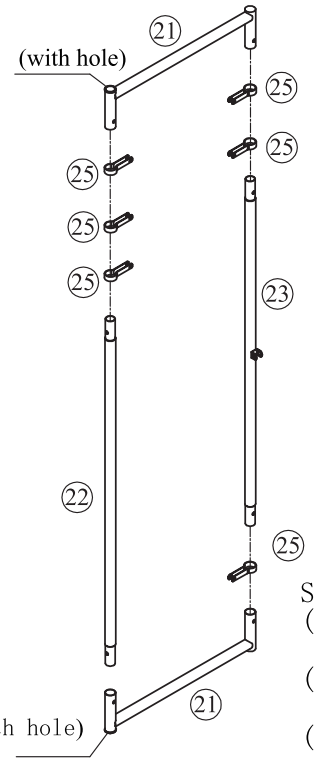

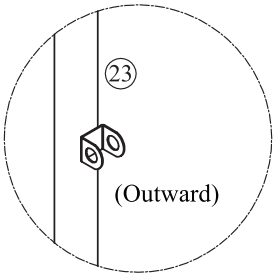

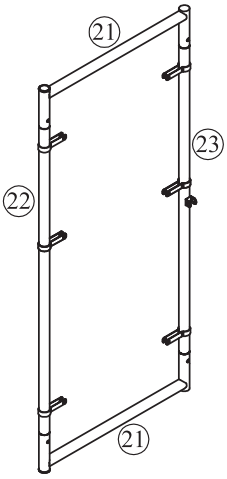

Step 6:

(1)Please assemble(#21,22,23) as shown in picture

(2)One end of(#21)with hole faces the same side

(3)One end of(#21)with hole is connected with(#22)

(4)When assembling the pipe fitting(#23),the lock must face outward and the pin rod face upward

(5)Please pre-install(#25)into the corresponding position

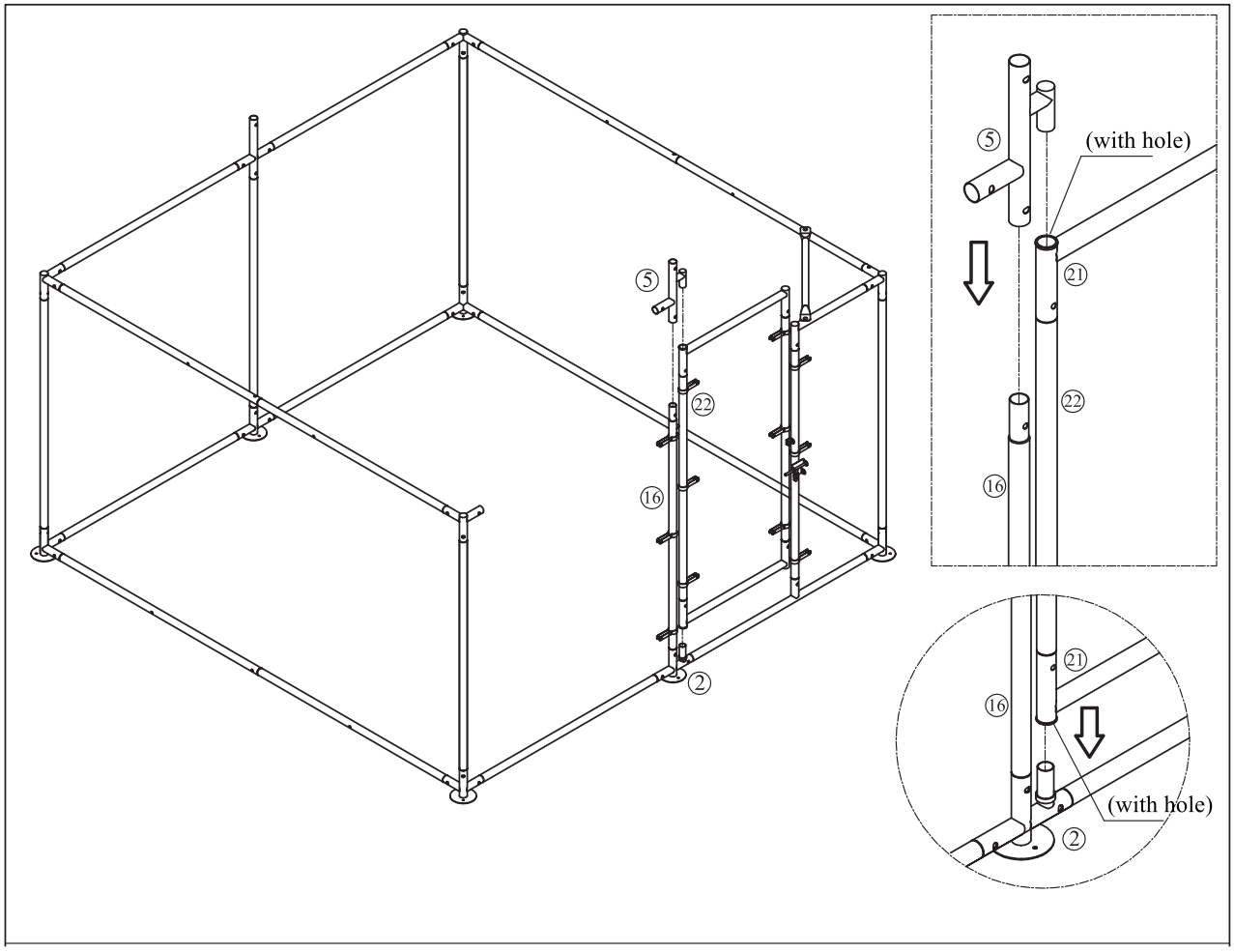

Step 7:

(1)Please install the assembled door to the overall frame

(2)Please insert the orifice with hole at the lower end of the door into the orifice on the right side of pipe fitting(#2)

(3)Please insert the pipe fitting(#5)into the upper end of pipe fitting(#16)with a hole and the pipe orifice with hole on the door

Step 8:

(1)Please assemble pipe fitting(#13) as shown in the figure

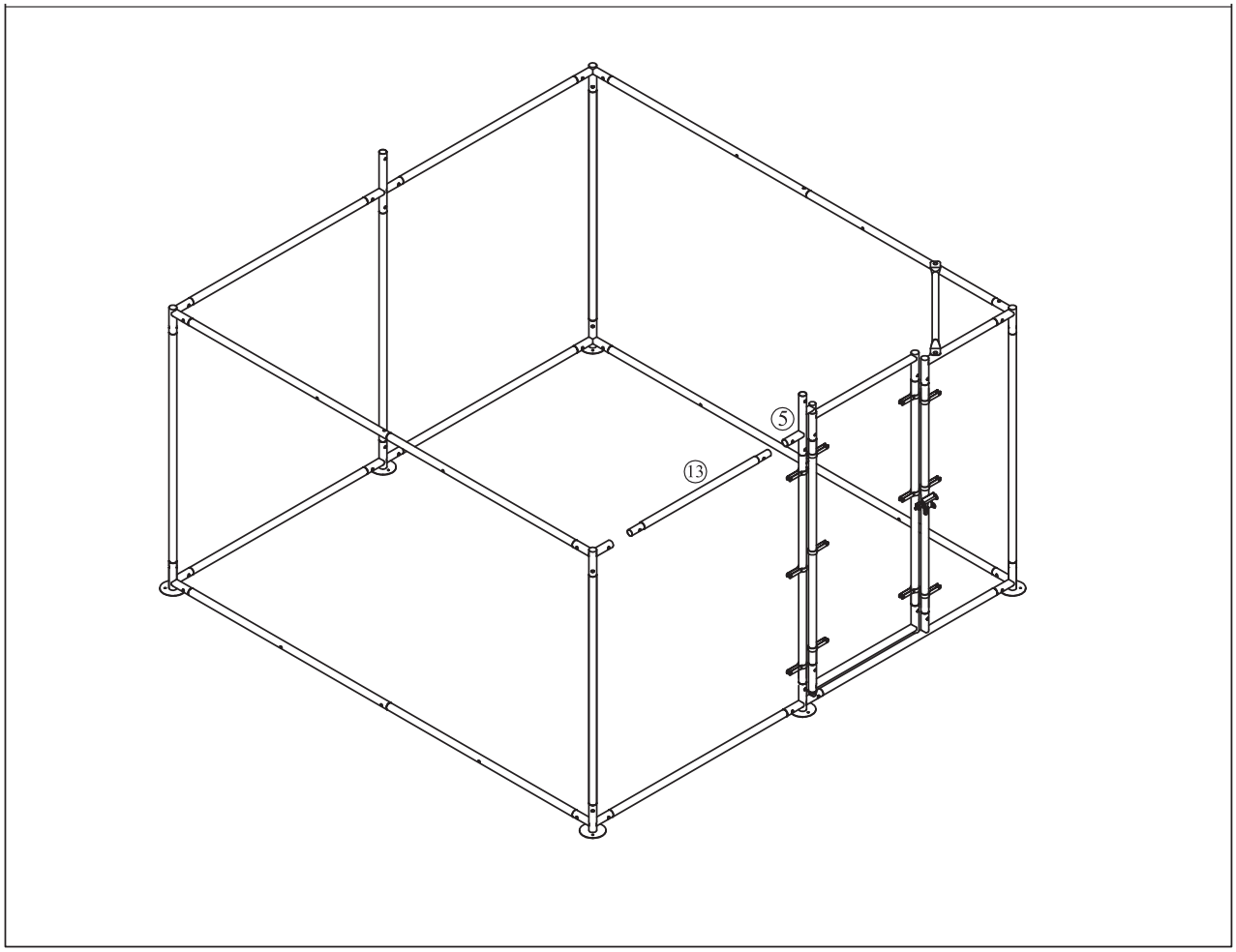

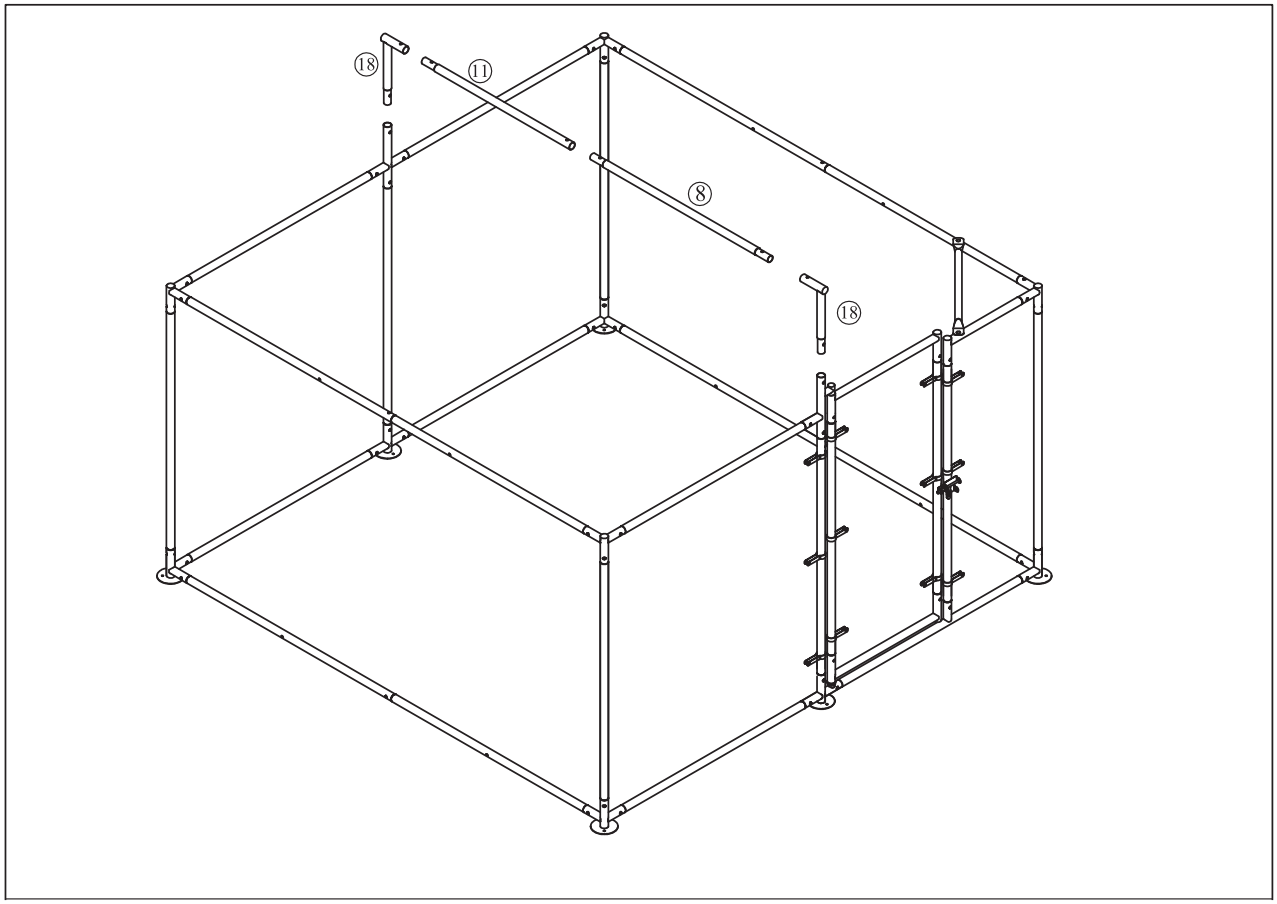

Step 9:

(1)Please assemble pipe fitting(#8,11,18)as shown in the figure

(2)When assemble the pipe fitting(#11),the end with the snap button is installed at the back(the door is in front),which cannot be reversed

Step 10:

(1)Please assemble the pipe(#19)with screw A and screw B

(2)When assembling pipe fitting(#19),put the end with high bending degree on the side and the end with small bending degree on the top

(3)Please assemble the top position first,and then assemble the two sides(if the reverse holes are not aligned,you can replace one end and reassemble)

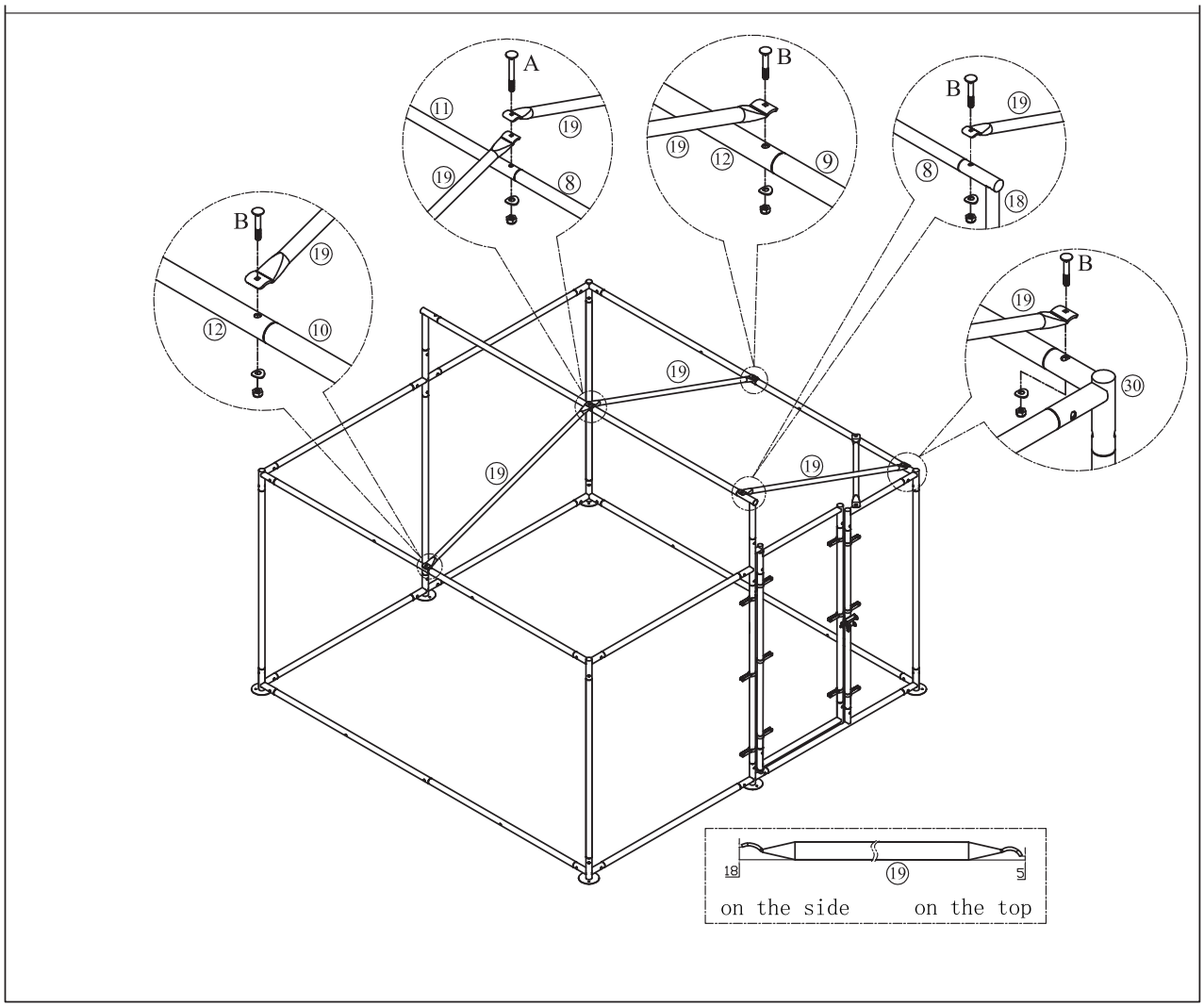

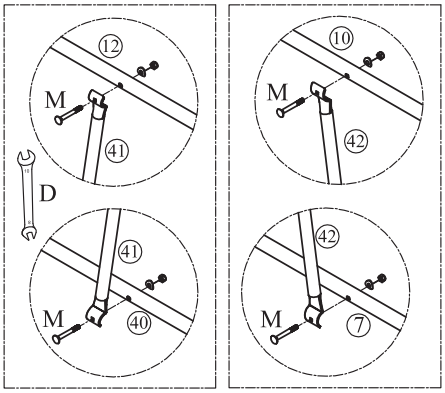

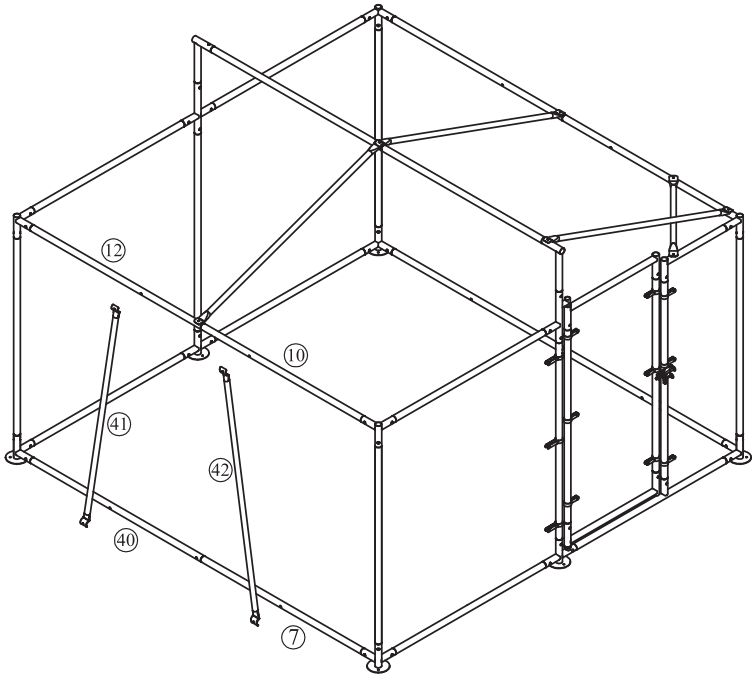

Step 11:

(1)Please assemble (#41)with screw M

(2)Please assemble (#42)with screw M

(please assemble them on the outside of frame)

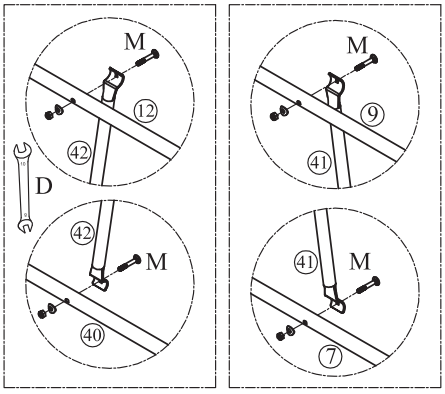

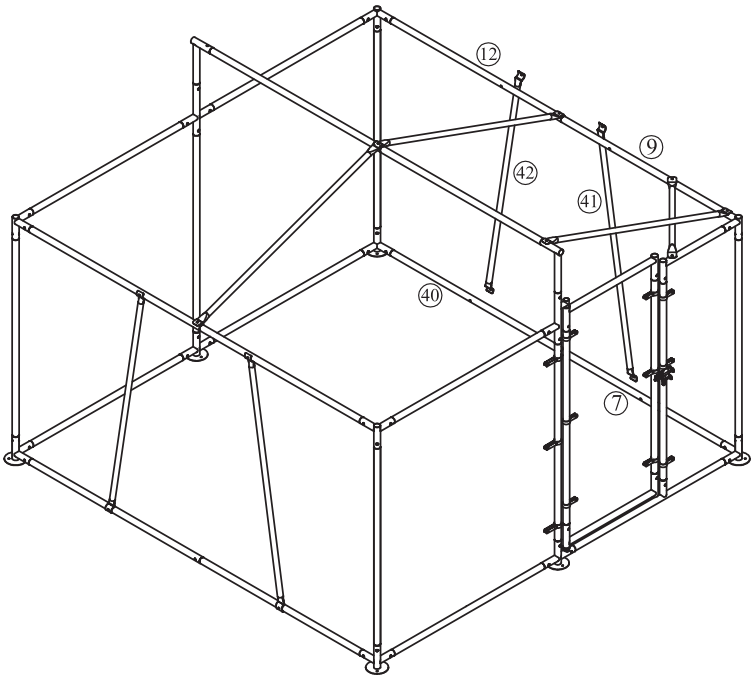

Step 12:

(1)Please assemble (#41)with screw M

(2)Please assemble (#42)with screw M

(please assemble them on the outside of frame)

In order to avoid the deformation or opening of the net caused by the biting and pulling of largev dogs, please install it according to the requirements of the manual. It is recommended to save the manual and contact us in time if there are any problems during use.

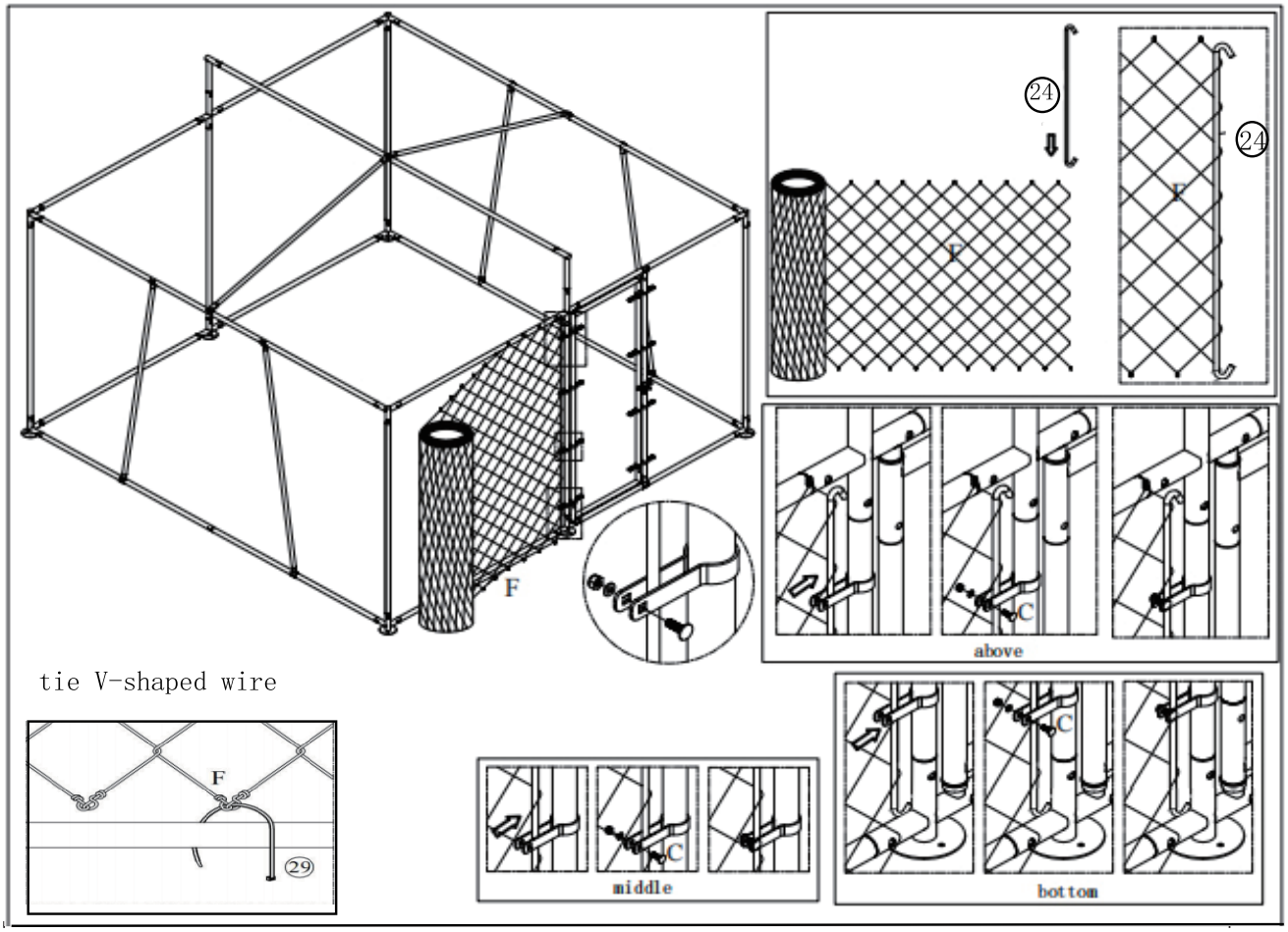

Step 13:

(1)Please open net(#F),and insert the iron bar(#24)into the hole formed by the barbed wire at the port(as shown in the picture)

(2)One end of the iron wire with a hook faces upwards,and after being assemnled,it is hung on the hole of the uppermost iron wire net

(3)Then erect the net(#F),lean against the assembled frame,Please install it from the external fixture on the left side of the door

(4)Please snap the iron wire(#24)into the clamp(#25)(upper,middle,and lower in total 3 pieces).Then lock the starting end of the iron wire and the net(#F)with screw C.Continue to wrap the net(#F)around the four sides of the metal frame.

(Need 2 people to operate)

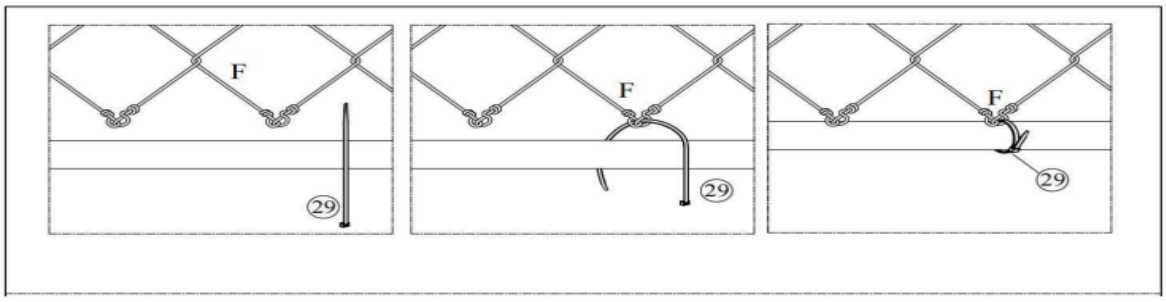

Please use cable tie (#29) to secure the V-shaped junction where the two iron wires meet on the iron pipe. Ensure the cable tie goes through the looped hole of the iron wire to prevent shifting

Additional Instructions For Installation of The Net

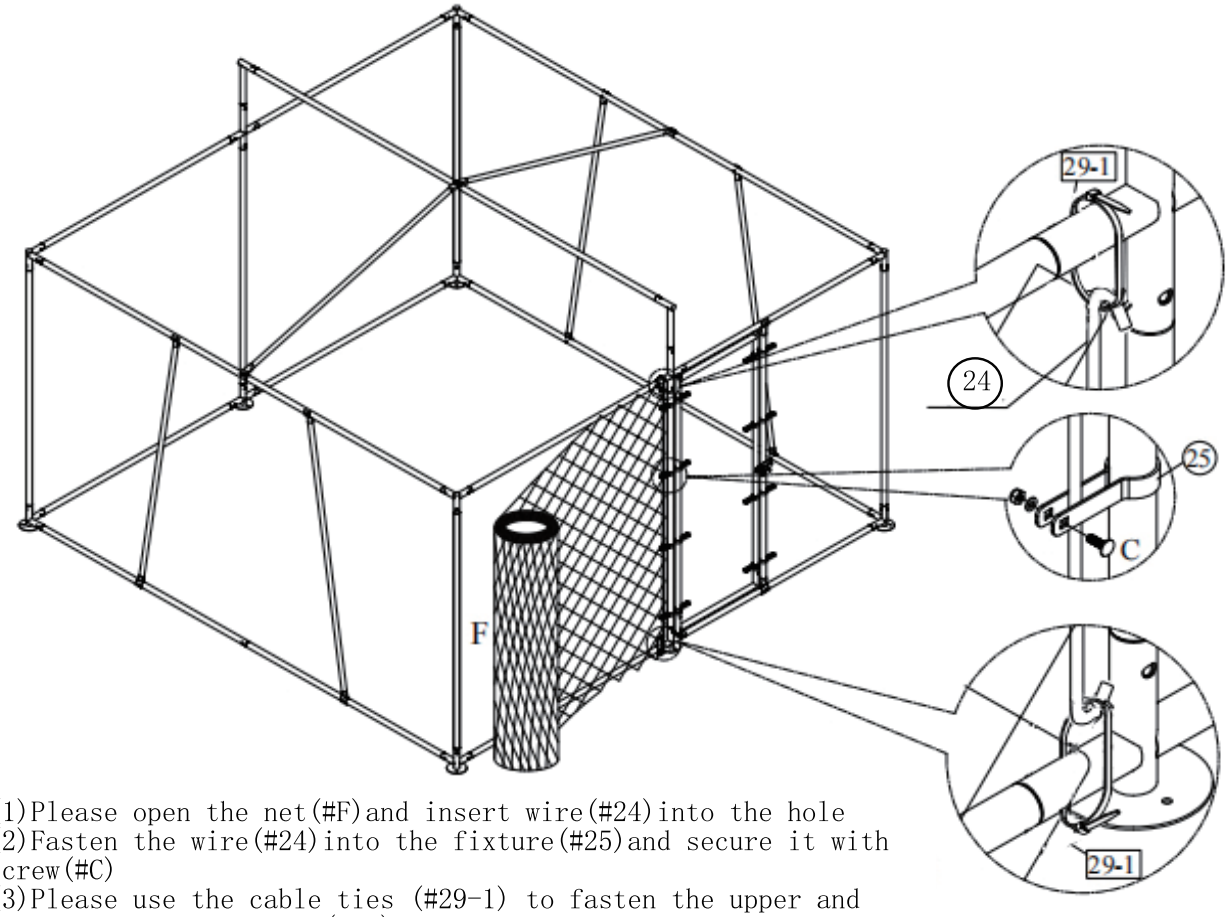

(1)Please open the net(#F)and insert wire(#24)into the hole
(2)Fasten the wire(#24)into the fixture(#25)and secure it with screw(#C)
(3)Please use the cable ties (#29-1) to fasten the upper and lower ends of the wire (#24) onto the iron pipe.

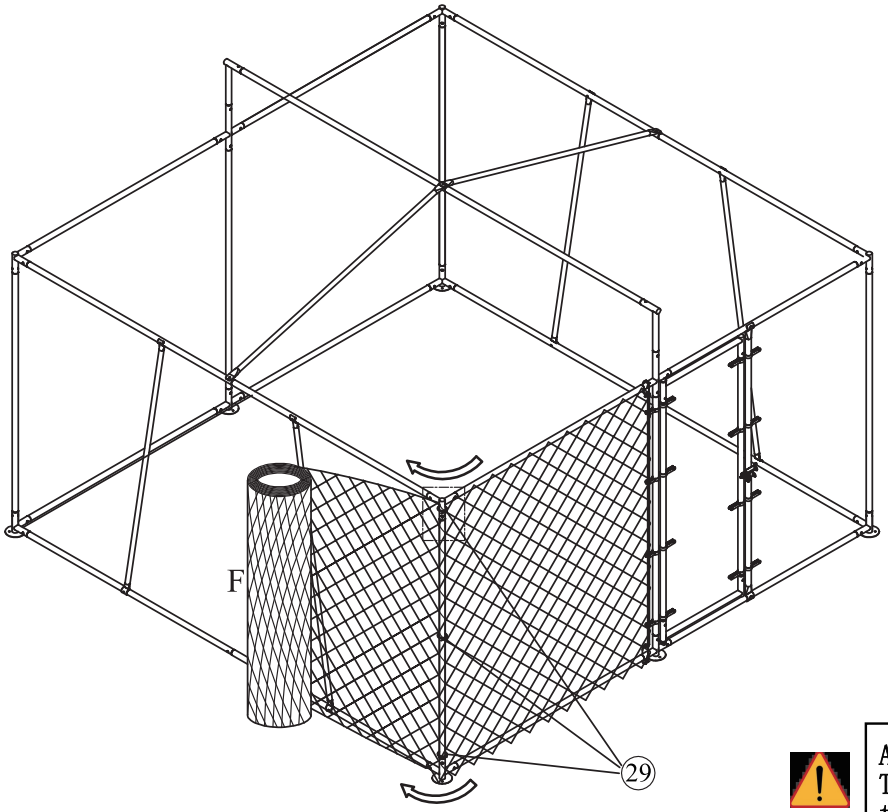

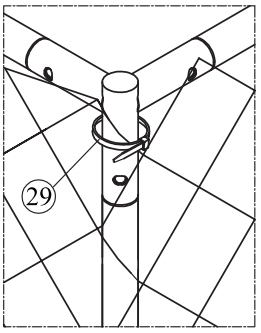

(1)Extend Net (F) through the first iron pipe and pull tightly.
(2)Tighten and secure the top, middle, and bottom of the net to the iron pipe with cable tie (#29).

Attention!!!
Tighten the net as tight as possible to prevent the dog from pulling it open and running out.

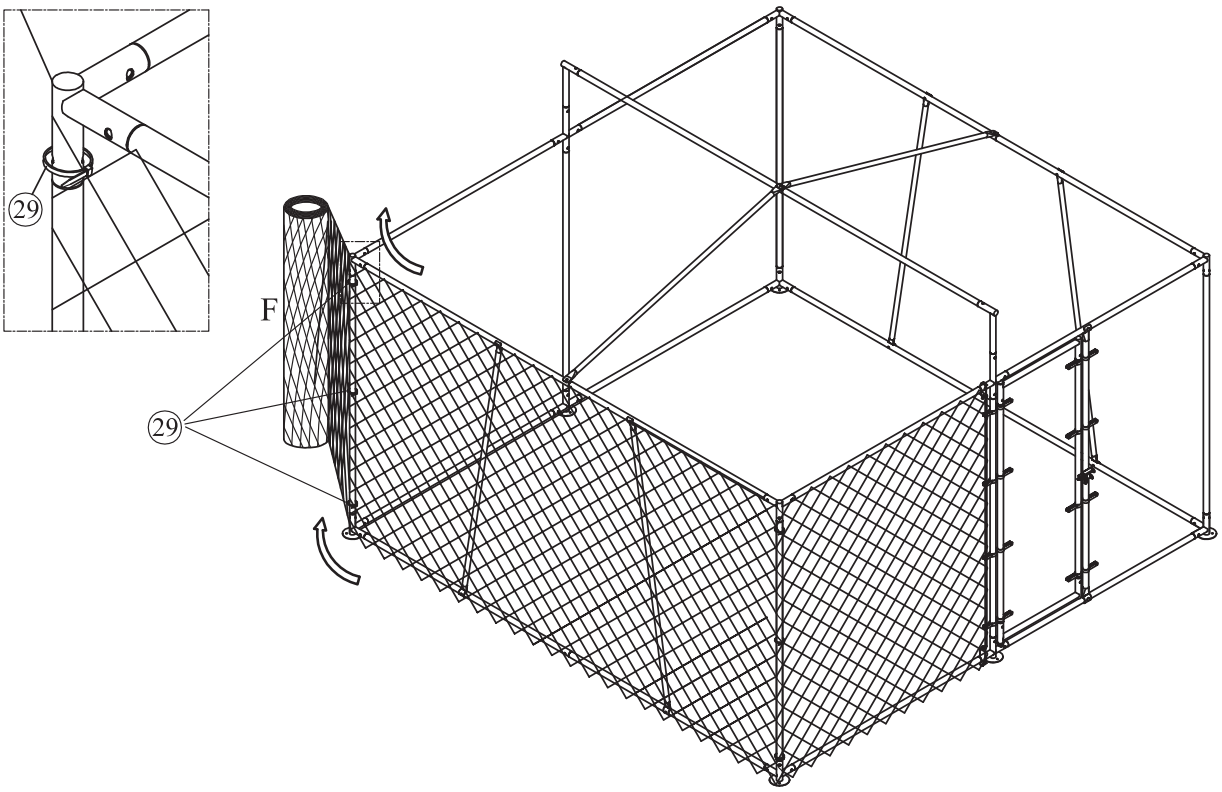

(1)Extend the Net(F)forward and pull firmly through the second iron pipe
(2)After tightening, fix the top, middle and bottom three ends on the iron pipe with cable tie(#29)

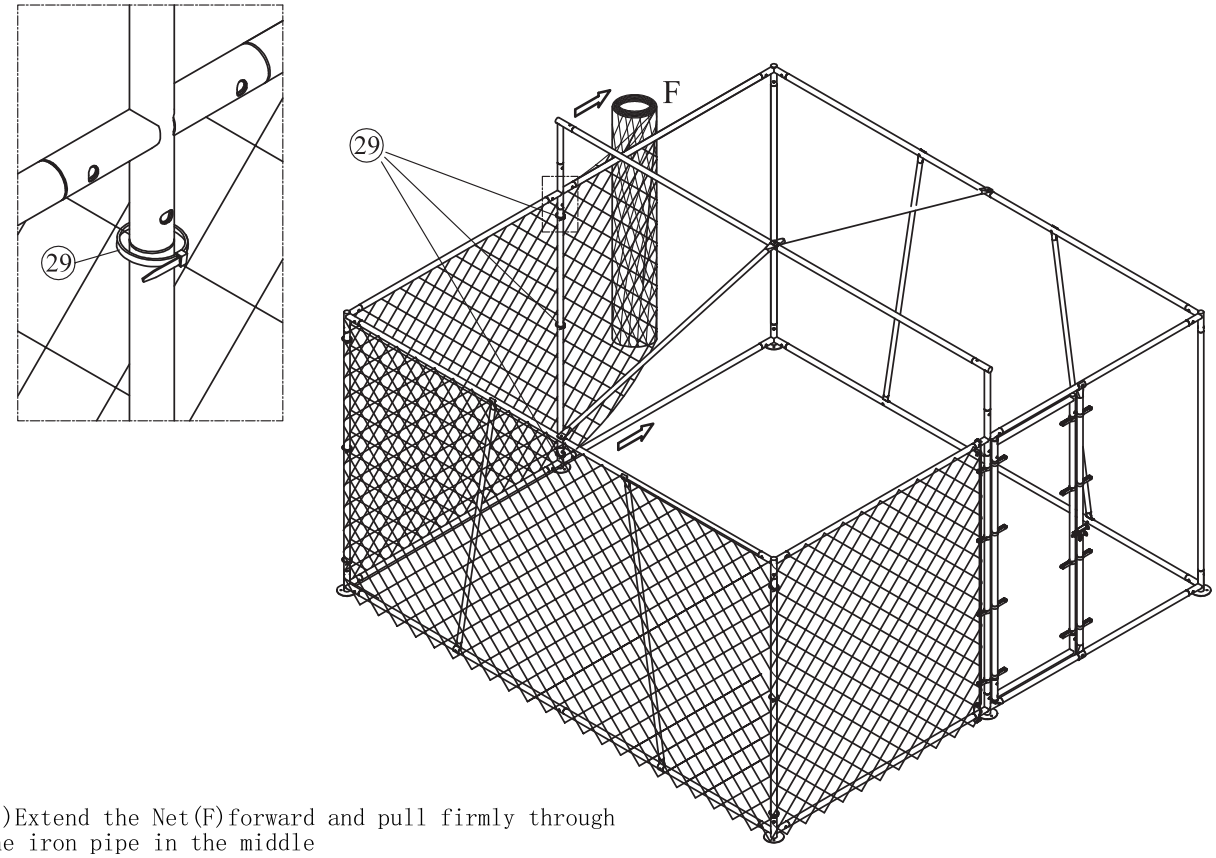

(1)Extend the Net(F)forward and pull firmly through the iron pipe in the middle
(2)After tightening, fix the top, middle and bottom three ends on the iron pipe with cable tie(#29)

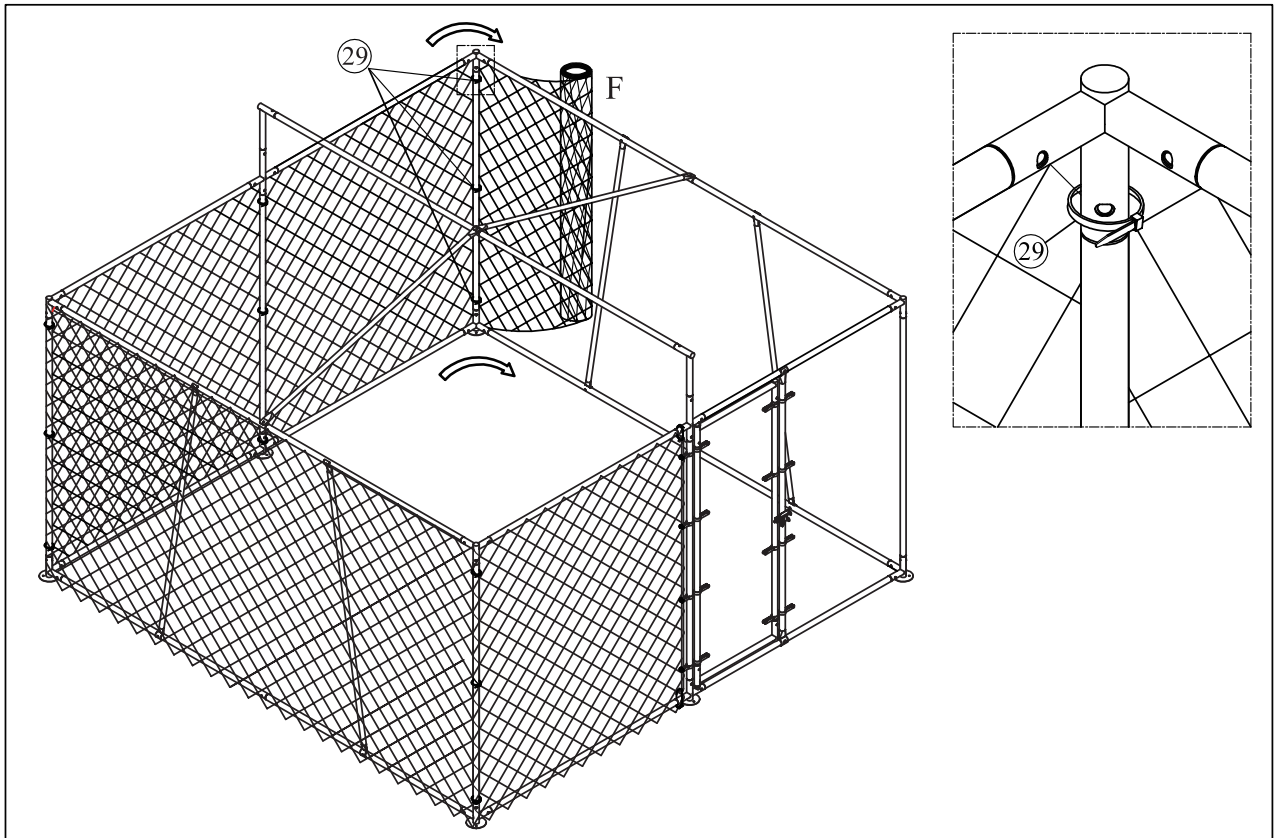

(1)Extend the Net(F)forward and pull firmly through the third iron pipe
(2)After tightening, fix the top, middle and bottom three ends on the iron pipe with cable tie(#29)

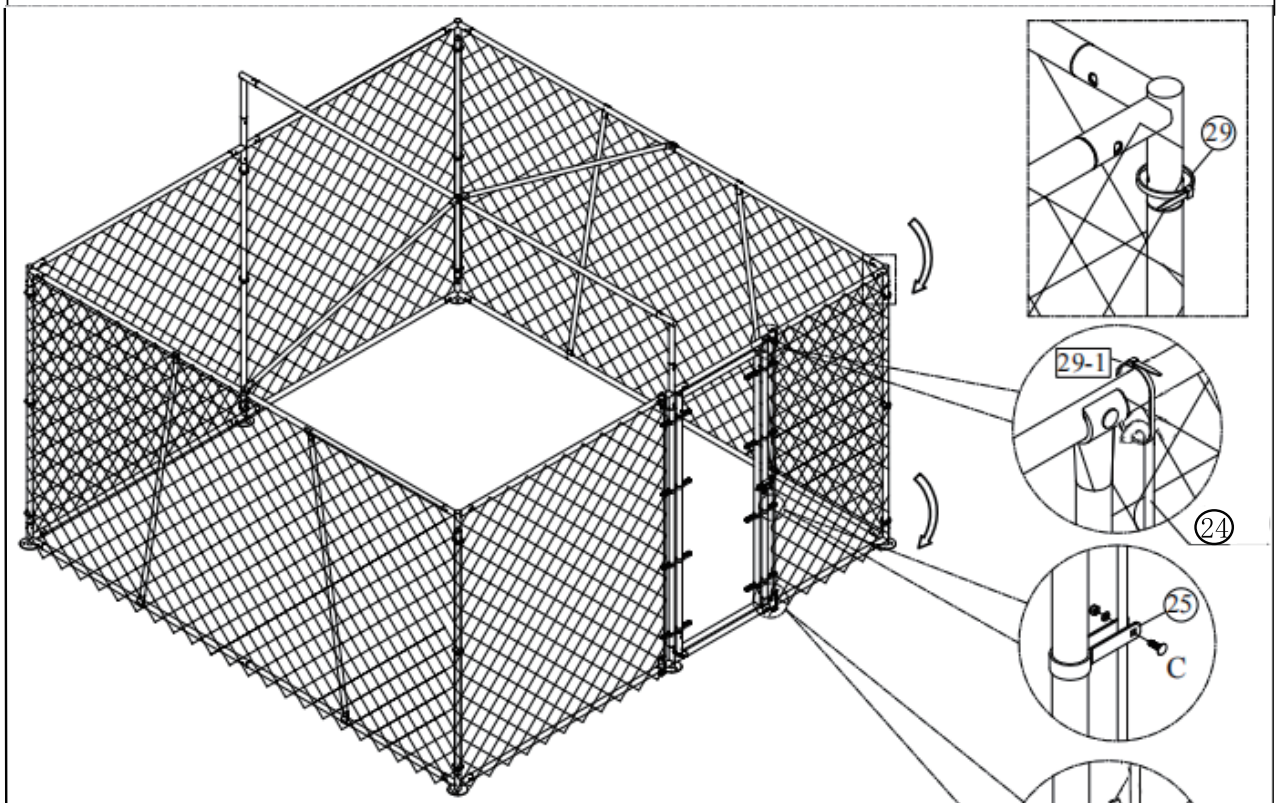

(1)Extend Net(F) and pull firmly through the iron pipe
(2)Fix the top, middle and bottom three ends with (#29)
(3)Insert(#20)into the hole and fix(#25)with screw(#C)
(3)Fasten the wire(#20)to the iron pipe with cable ties(#29-1)
(4)All the V-shaped parts of the wire at the upper and lower ends of the net are tied tightly with cable ties(#29)
(If the net is left,the wire can be moved forward a few squares)

Step 14:

(1)Please insert the iron bar(#24)into the hole formed by the barbed wire at the end of the net(#F),as shown in the upper right

(2)One end of the iron wire with a hook faces upwards,and after being assembled,it is hung on the hole of the uppermost iron wire net

(3)Iron bar(#24)and mesh are clamped into the fixture(#25)on the outside of the right side of the door(upper,middle,and lower in total 3 pieces)

(4)Then the tail ends of the iron wire and mesh are locked with screw C(if the length of the net is sufficient,the iron wire can be moved back to one grid for assembly)

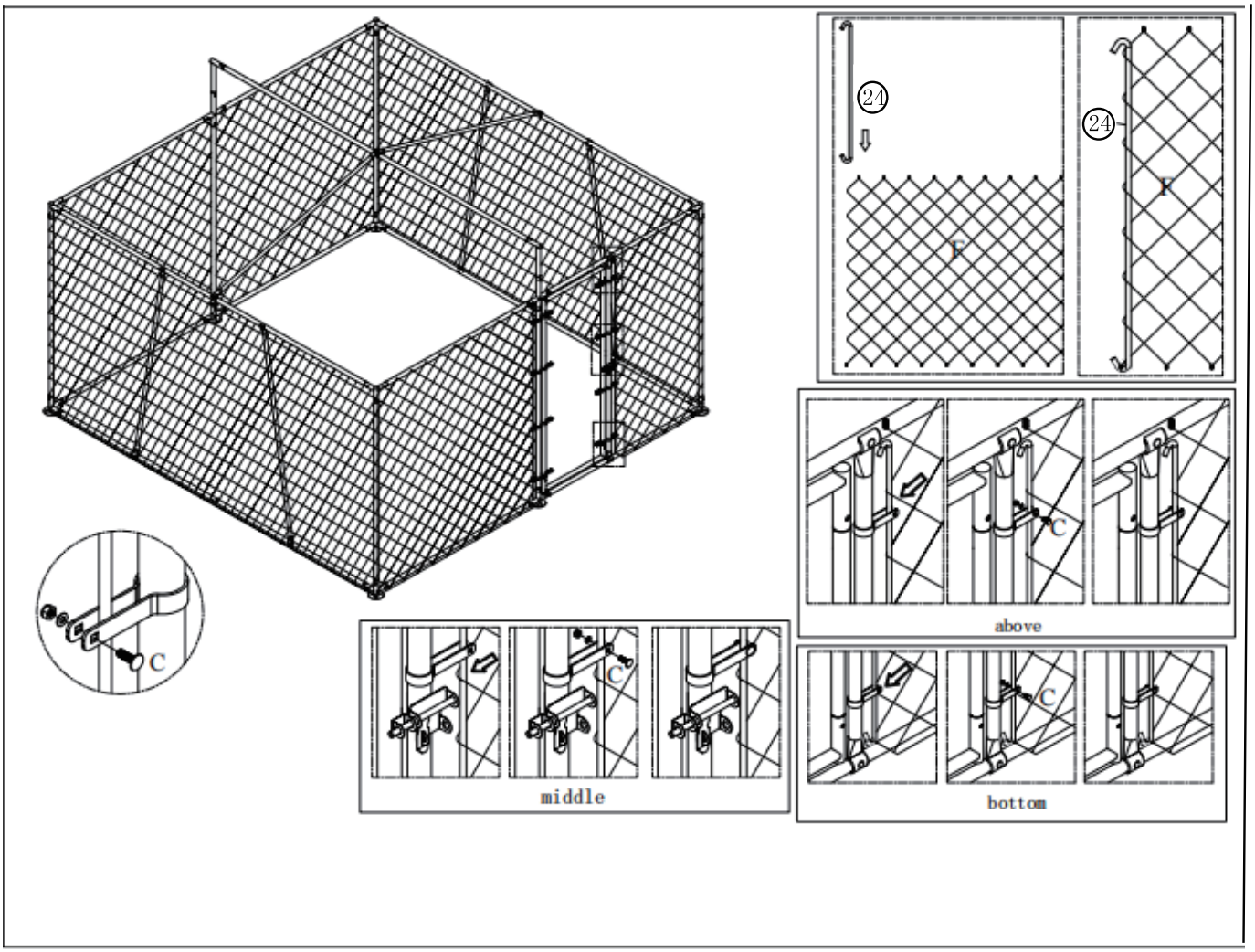

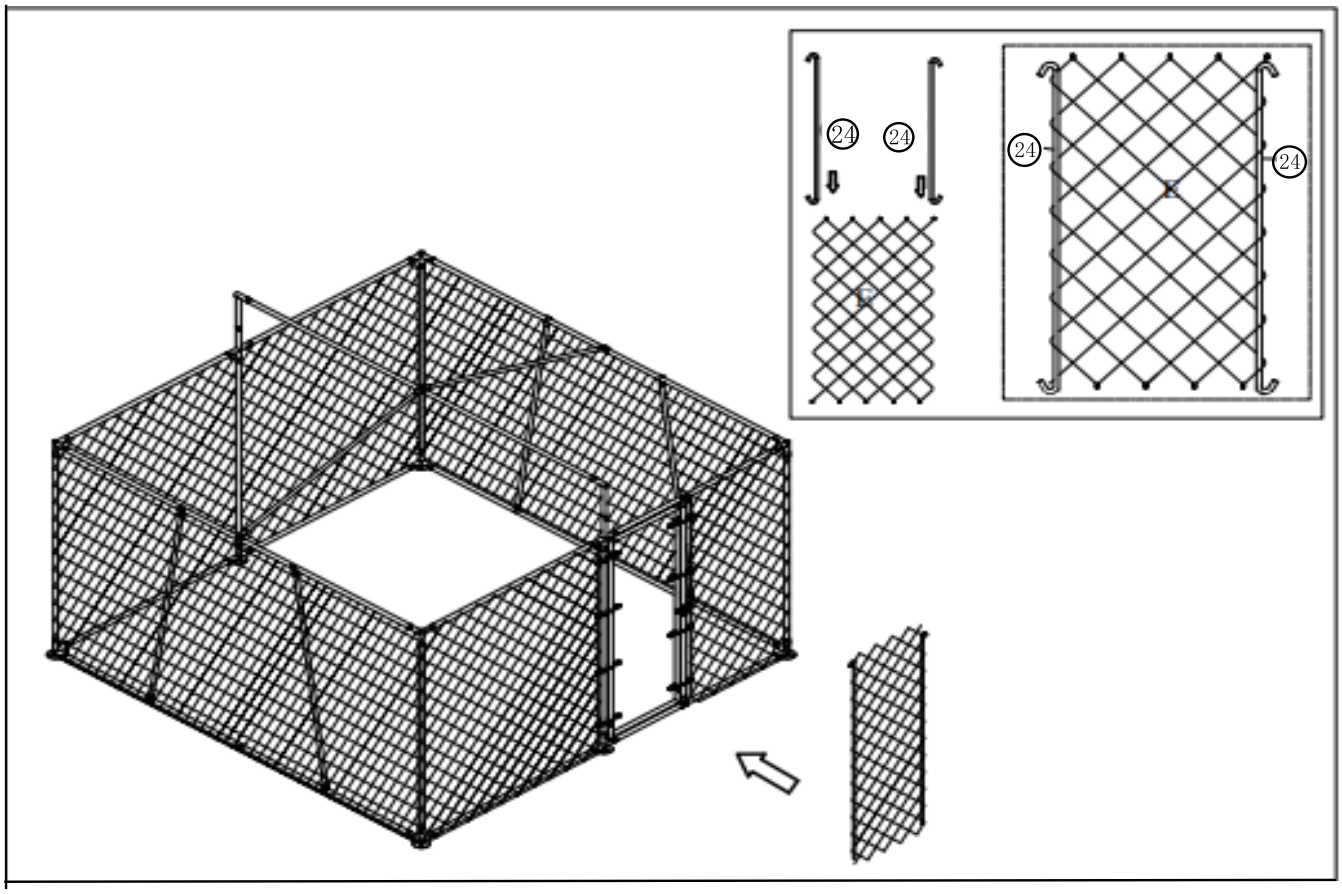

Step 15:

(1)Please insert the iron bar(#24)into the holes formed by barbed wire at both ends of the net (#E),as shown in the picture

(2)One end of the iron wire with a hook face upwards,and after being assembled,it is hung on the hole of the uppermost iron wire net

(3)Then assemble the iron bar(#24)and net into the door frame

Step 16:

(1)The iron bar(#24)at both ends of the net(#E)is forcibly pulled to the left and right sides of the door frame

(2)Clamp the iron bar(#24)and net into the fixture(#25)in the door(upper,middle,and lower in total 3 pieces)

(3)Then fix the upper and lower ends of the net on the upper and lower iron pipes with cable ties(#29)

(every two iron bar(#24)ports are spliced to form a V-shaped position,which is tied to the iron pipe through a tie)

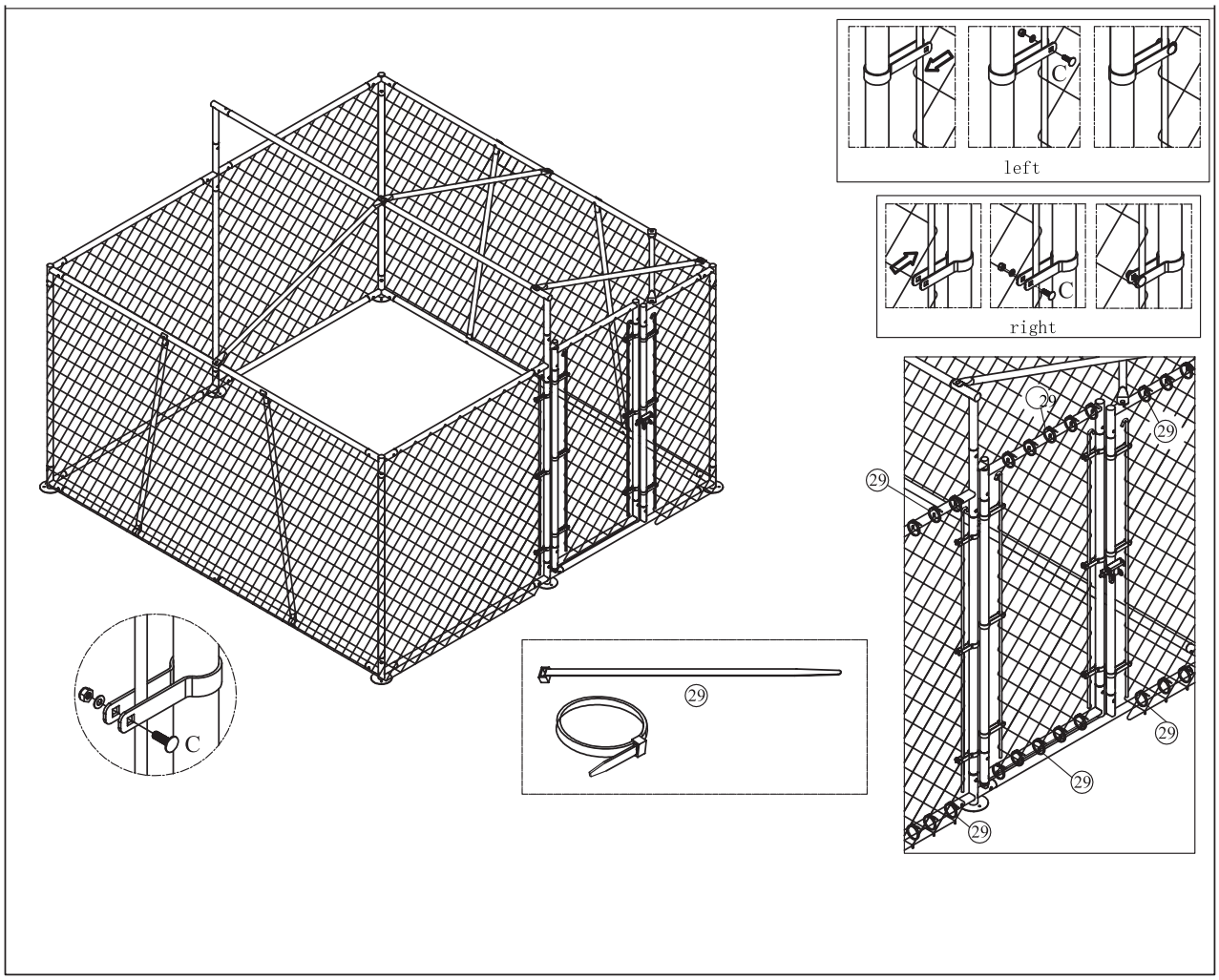

STEP 16 Supplement

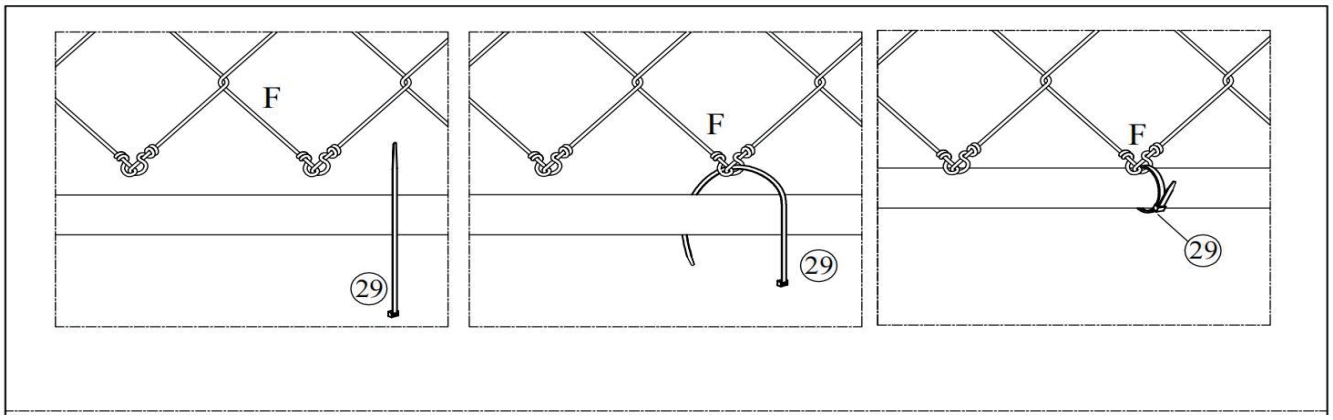

Please use cable tie (#29) to secure the V-shaped junction where the two iron wires meet on the iron pipe. Ensure the cable tie goes through the looped hole of the iron wire to prevent shifting

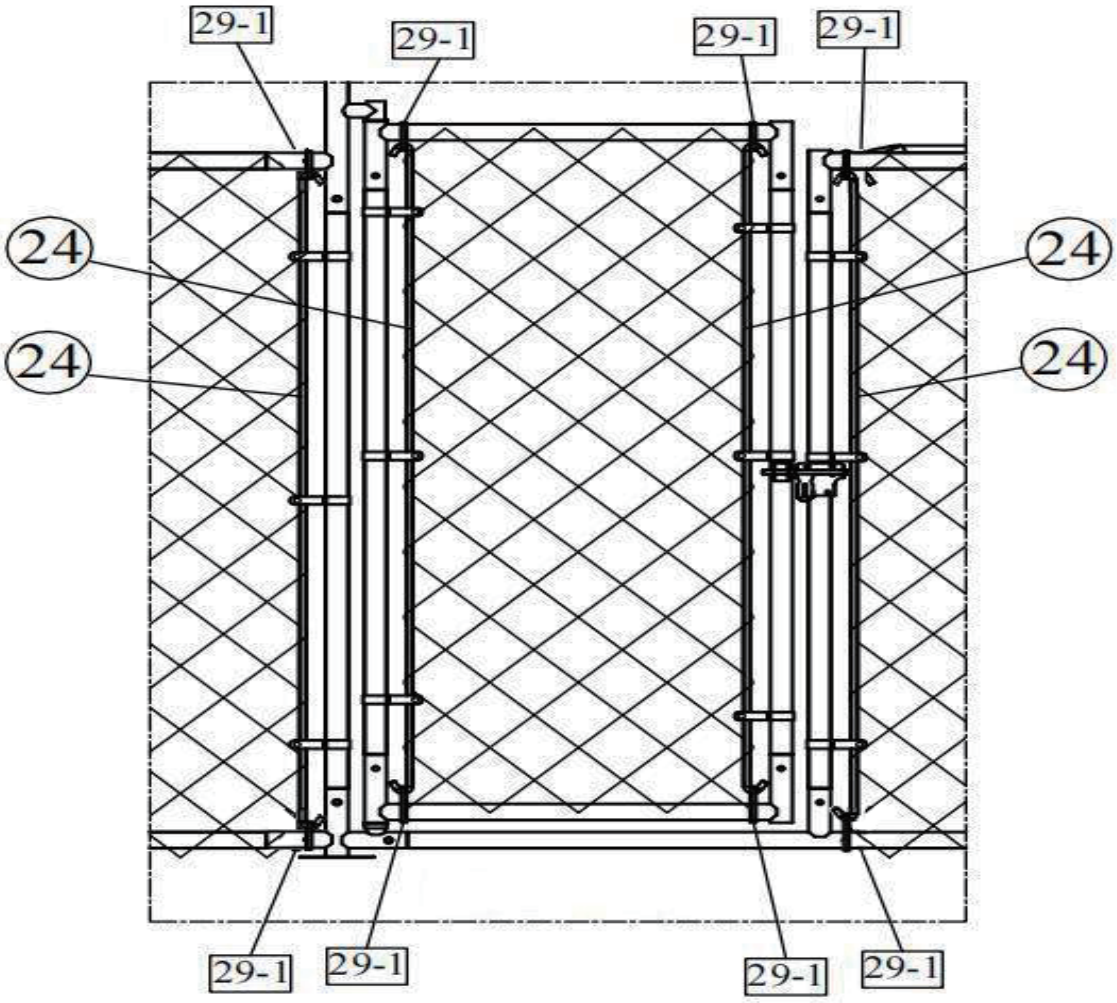

Please secure the wire(#24) to the upper and lower iron pipes with (#29-1)to prevent displacement
PS:(#29-1)is longer than (#29).After installation, if there are any leftover cable ties, please use them all to secure the wire mesh

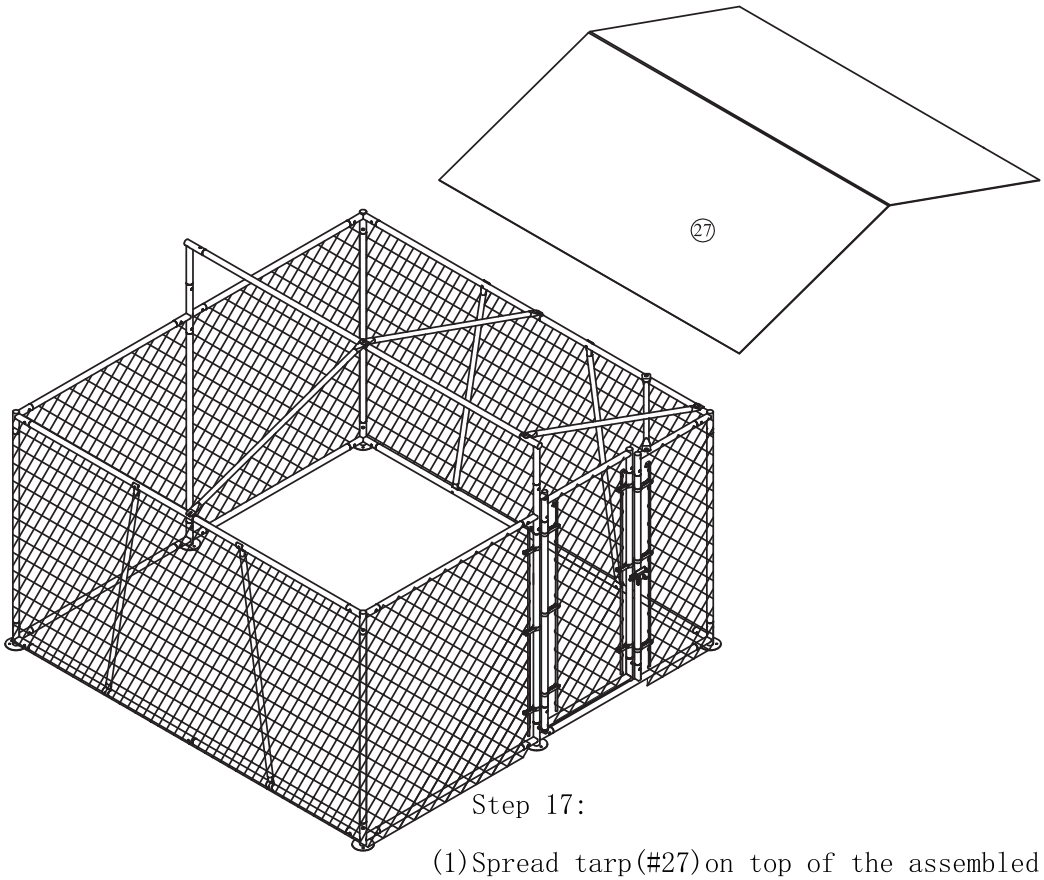

Step 17:

(1)Spread tarp(#27)on top of the assembled frame

Step 18:

(1)Assemble (#28)to go through the hole under the tarp(#27),then hundle it on the set of metal frames (please note that the sign must be assembled on the door)

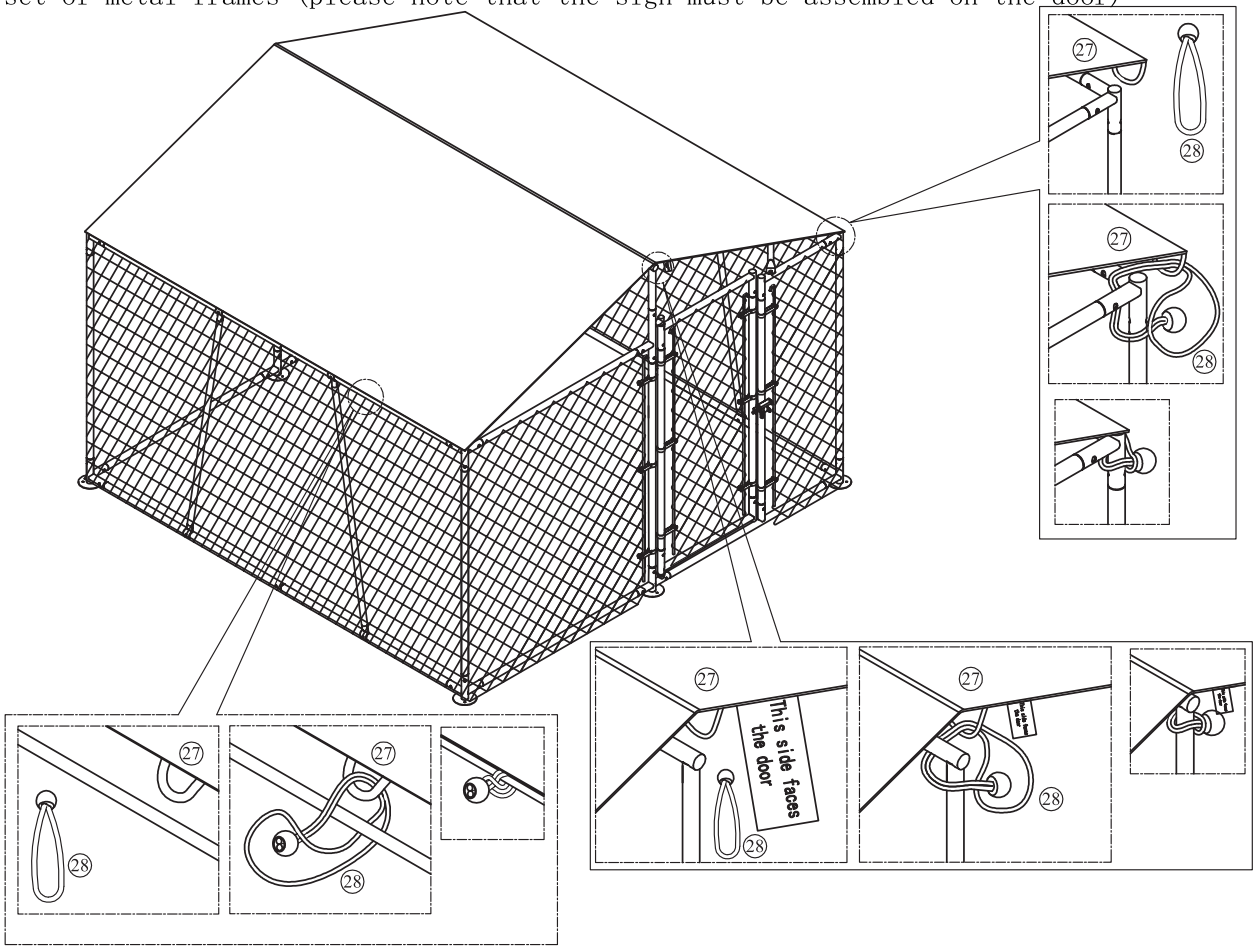

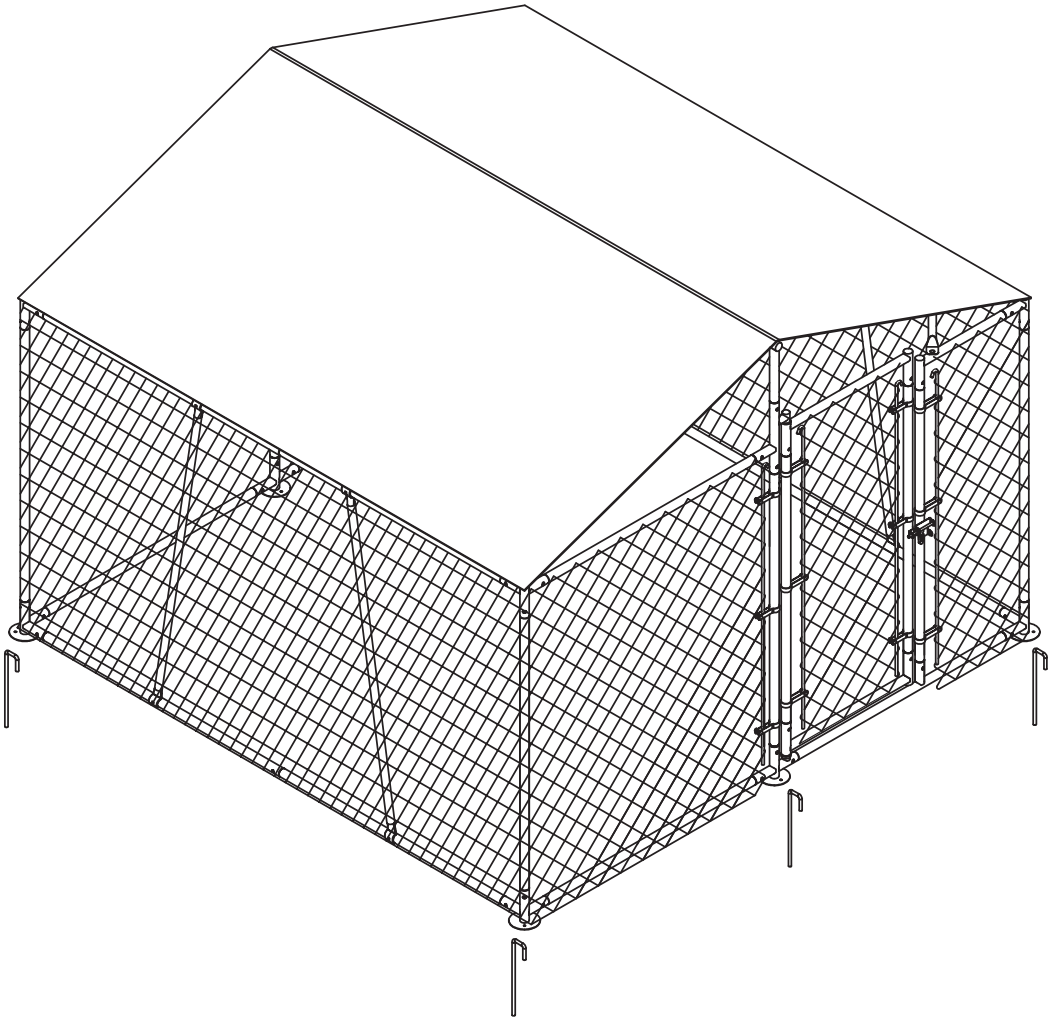

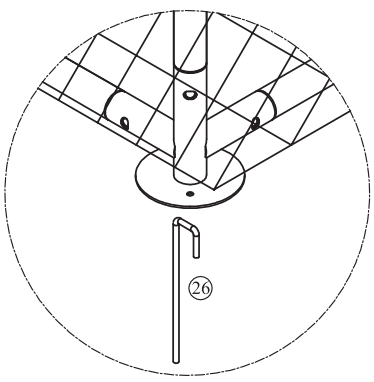

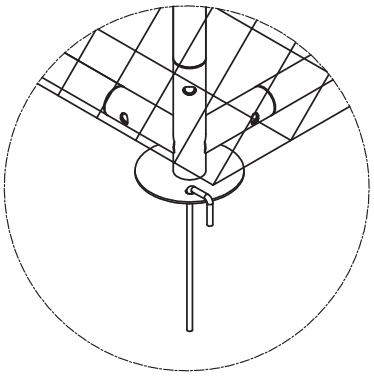

Step 19:

Finally,the iron frame is firmly fixed on the ground with nail(#26)to complete the entire assembly