ASSEMBLY INSTRUCTIONS

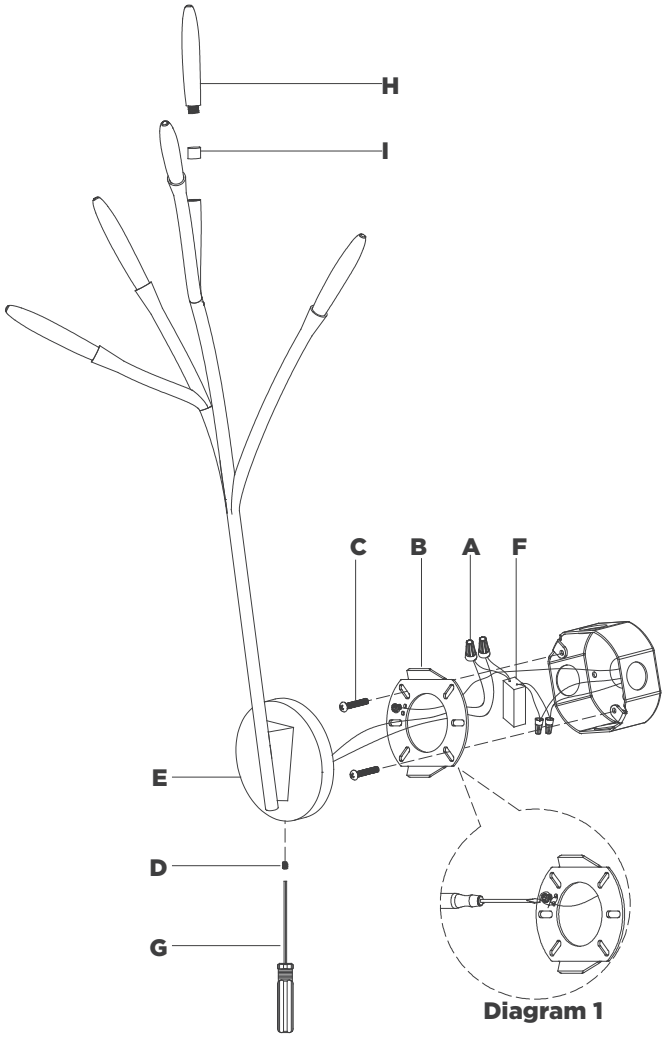

Diagram 1

Tirucalli 25″ Sculpted Sconce

Item # TOB2360

NOTICE:

This light fixture should be installed in accordance with all applicable, local installation codes, and by a person familiar with the construction and operation of it, as well as the hazards involved. Inspect item and contents carefully. If any damage or defect is found, do not install. Retain all packaging material until installation is complete and approved.

TOOLS REQUIRED (NOT INCLUDED):

Phillips Screwdriver Slotted Screwdriver

1. Carefully remove all parts from the box. Place on a clean, soft surface.
2. Remove mounting plate **(B)** from fixture **(E)** by removing set screw **(D)** using provided screwdriver **(G)**.
3. Connect driver **(F)** input neutral wire (white) to the supply neutral wire (usually white) using wire nut **(A)**.
4. Connect driver **(F)** input hot wire (black) to the supply hot wire (usually black) using wire nut **(A)**.
   CAUTION: Do not reverse the hot and neutral connections.
5. Insert driver **(F)** into junction box.
6. Install mounting plate **(B)** to the junction box and secure with mounting screws **(C)**.
7. Connect supply ground wire (usually green or bare copper) around the green grounding screw (see diagram 1). Tighten.
   NOTE: It is imperative that the fixture is grounded.
8. Connect fixture neutral wire (blue) to driver **(F)** output wire (blue) using wire nut **(A)**.
9. Connect fixture hot wire (red) to driver **(F)** output wire (red) using wire nut **(A)**.
   CAUTION: Do not reverse the hot and neutral connections.
10. Make sure all wire connections are tight, then carefully tuck into the junction box.

ASSEMBLY INSTRUCTIONS

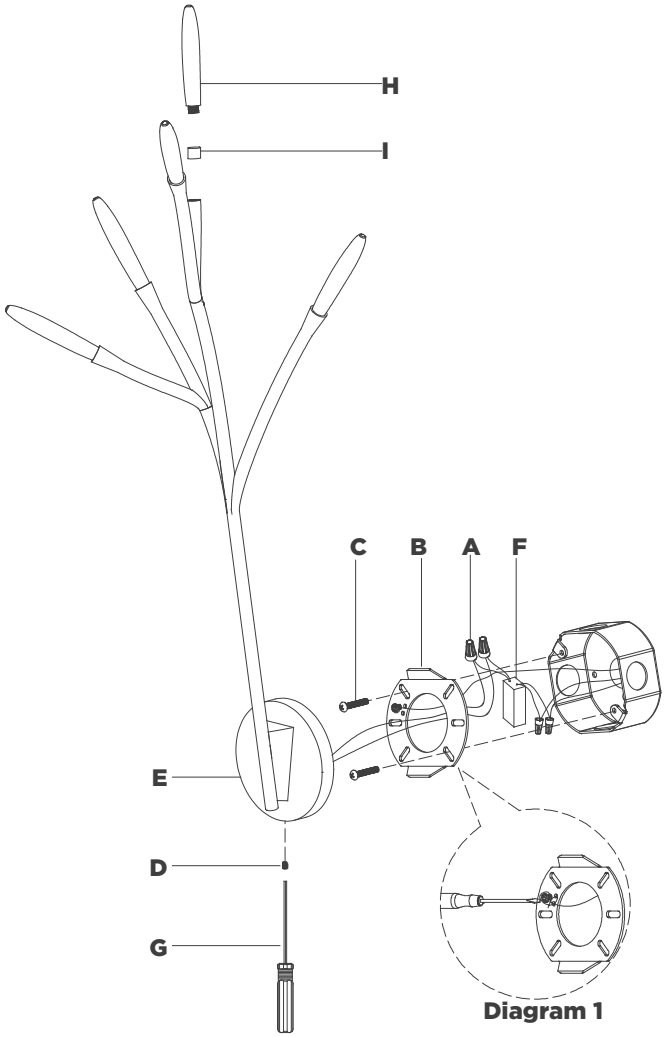

Diagram 1

Tirucalli 25″ Sculpted Sconce

Item # TOB2360

NOTICE:

This light fixture should be installed in accordance with all applicable, local installation codes, and by a person familiar with the construction and operation of it, as well as the hazards involved. Inspect item and contents carefully. If any damage or defect is found, do not install. Retain all packaging material until installation is complete and approved.

---

11. Install fixture **(E)** to mounting plate **(B)** and secure with set screw **(D)** using provided screwdriver **(G)**.
12. Remove protective caps **(I)** from fixture, then thread shades **(H)** to fixture.

    NOTE: Do not overtighten shades **(H)**. Discard protective caps **(I)** after assembly.

CARE INSTRUCTIONS: Clean only with a soft dry cloth or feather duster. Do not use abrasive or chemical agents.

Intertek DAMP LED 3